AN 02-35GC-4

PARTS CATALOG

FOR

AIRCRAFT ENGINES

MODELS

R-1820-40, -40B, -54, -60, -65, -71 -73, -87, -95 and -97

Published under joint authority of the Commanding General, Army Air Forces, and the Chief of the Bureau of Aeronautics.

Wm. B. Burford Printing Company, Indianapolis, Indiana, Reprint, 2000, 3-11-53

21 JANUARY 1946
REVISED 15 APRIL 1946

Reproduction of the information or illustrations contained in this publication is not permitted without specific approval of the issuing service (War or Navy Department).

LIST OF REVISED PAGES ISSUED

NOTE: A heavy black vertical line to the left or in outer margin of text on revised pages, indicates the extent of the revision. This line is omitted where more than 50 percent of the page is revised. A black horizontal line to the left of page numbers listed below indicates pages revised, added or deleted by current revision. This line is used only on second and subsequent revisions.

Page No.	*Date of Latest Revision*
187	15 April 1946
188	15 April 1946

AAF

ADDITIONAL COPIES OF THIS PUBLICATION MAY BE OBTAINED AS FOLLOWS:

AAF ACTIVITIES.—In accordance with AAF Regulation No. 5-9.

NAVY ACTIVITIES.—Submit request to nearest supply point listed below, using form NavAer-140: NAS, Alameda, Calif.; ASD, Guam; NAS, Jacksonville, Fla.; NAS, Norfolk, Va.; NASD, Oahu; NASD, Philadelphia, Pa.; ASD, Samar-Leyte; NAS, San Diego, Calif.; NAS, Seattle, Wash.

For complete listing of available material and details of distribution see Naval Aeronautics Publications Index, NavAer 00-500.

TABLE OF CONTENTS

Section		Page Number	Ill. on Page Number
I	INTRODUCTION	1	
	1. General	1	
	2. Replacement Studs	1	
	3. Front and Rear	1	
	4. Right and Left	1	
	5. Cylinder Numbers	1	
	6. Abbreviations	2	
	7. Symbols	2	
	8. Engine Numbers	2	
II	GROUP ASSEMBLY PARTS LIST	3	
	Crankcase and Supercharger Sections	3	
	Crankcase Front Section	3	5, 6
	Crankcase Main Section	9	8
	Supercharger Front Housing	9	10
	Supercharger Diffuser Plate	12	10
	Supercharger Rear Housing	13	10
	Supercharger Drain Valve and Tube	18	10
	Supercharger Rear Cover	19	23
	External Hydro-Oil Supply Tubes (Supercharger Rear Housing to Crankcase Front Section)	29	30
	External Hydro-Oil Supply Tubes (Supercharger Rear Cover to Crankcase Front Section)	31	31
	Oil Sump	33	34
	Oil Pump System	35	
	Oil Pump	35	38, 40, 42
	External Oil Suction Tubes (Oil Sump to Oil Pump)	48	49
	Oil Filter (Supercharger Rear Housing)	51	52
	Oil Strainer (Supercharger Rear Housing)	53	54
	Cam and Cam Drive	54	55
	Impeller and Impeller Drive	56	
	Impeller and Impeller Shaft	56	56
	Impeller Drive (Single-Speed)	58	58
	Impeller Drive (Plate Type Clutch)	58	59
	Impeller Drive (Roller Type Clutch)	62	63
	Supercharger Clutch Oil Control Valve Housing (For Plate Type Clutch)	65	59
	Supercharger Clutch Oil Control Valve Housing (For Roller Type Clutch)	65	63

AVIALOGS WWW.AVIALOGS.COM

Section		Page Number	Ill. on Page Number
	Accessory Drives	66	
	Accessory Drive and Starter Shaft	66	67
	Generator Drive	71	72
	Oil Pump Drive	73	74
	Fuel Pump and Dual Accessory Drive	73	74
	Fuel Pump Drive	73	74
	Magneto and Gun Synchronizer Impulse Generator Drives (For Engines with Provision for Two Gun Drives)	75	76
	Magneto and Gun Synchronizer Impulse Generator Drives (For Engines with Provision for One Gun Drive)	77	78
	Controllable Pitch Propeller Governor Drive	79	79
	Dual Accessory Drive	80	82, 83
	Crankshaft, Propeller Shaft and Reduction Gear	88	
	Crankshaft	88	90, 91
	Propeller Shaft (3:2 Ratio)	96	95, 96
	Propeller Shaft (16:9 Ratio)	98	98
	Propeller Shaft and Support (Direct Drive)	99	100
	Propeller Shaft Reduction Gear (3:2 Ratio)	102	102
	Propeller Shaft Reduction Gear (16:9 Ratio)	103	104
	Connecting Rods	106	108
	Cylinders, Intake Pipes, Pistons and Air Deflectors	113	
	Cylinders	113	114
	Intake Pipes	120	114
	Pistons	120	114
	Inter-Cylinder Air Deflectors (R1820-40)	126	125
	Cylinder Air Deflector Attaching Parts	129	125
	Inter-Cylinder Air Deflectors (R1820-40B and -60)	131	130
	Cylinder Air Deflector Attaching Parts	136	130
	Inter-Cylinder Air Deflectors (R1820-54)	138	137
	Cylinder Air Deflector Attaching Parts	140	137
	Inter-Cylinder Air Deflectors (R1820-65, -73 and -97)	142	141
	Cylinder Air Deflector Attaching Parts	144	141
	Inter-Cylinder Air Deflectors (R1820-71)	146	145
	Cylinder Air Deflector Attaching Parts	150	145
	Inter-Cylinder Air Deflectors (R1820-87)	152	151
	Cylinder Air Deflector Attaching Parts	154	151
	Inter-Cylinder Air Deflectors (R1820-95)	157	156
	Cylinder Air Deflector Attaching Parts	159	156
	Inter-Cylinder Air Deflectors (Between Cylinders No. 2–3 and 8–9) (R1820-40B, -54 and -60)	160	130, 137
	Cylinder Head Air Deflectors	166	125, 130, 137, 141, 145, 151, 156
	Valve Mechanism	168	
	Rocker Arm	168	169

Section		Page Number	Ill. on Page Number
	Push Rod and Housing	168	169
	Valve Tappet	168	169
	Valves and Springs	170	169
	Ignition	170	
	Magneto	170	170, 171
	Ignition Cable	173	175, 177
	Spark Plugs	179	175, 177
	Carburetion	181	
	Carburetor	181	182
	Carburetor Air Inlet Screen and Air Scoop Attaching Parts	183	182
	Priming System	183	
	Five Point Priming	183	184
	Two Point Priming (R1820-54)	186	186
	Two Point Priming (R1820-60)	187	187
	Priming Tube Fittings	188	
	Gun Synchronizer Impulse Generator (Type E-4)	188	189
	Gun Synchronizer Impulse Generator and Drives (Type E-8)	192	193
	Gun Synchronizer Impulse Generator Drive (For Type E-8 Generator) (One Gun Drive)	196	196
	Miscellaneous	198	
	Thermocouple (Spark Plug)	198	198
	Thermocouple (Cylinder Base)	199	199
	Government Furnished Equipment	199	
	Fuel Pump	199	
	Exploded View of Typical 9 Cylinder Engine		199
III	NUMERICAL PARTS LIST	200	
IV	STANDARD PARTS LIST	234	
	AN Standard Parts	234	
	Army Standard Parts	234	
	Vendors' Standard Parts	234	
	Wright Standard Parts	235	

AVIATIONS
WWW.AVIATIONS.COM

SECTION I
INTRODUCTION

1. GENERAL

a. This catalog lists and describes the parts for Wright Cyclone Models R1820-40, -40B, -54, -60, -65, -71, -73, -87, -95 and -97 engines manufactured by the Wright Aeronautical Corporation, Paterson, New Jersey and is divided into four sections as shown in the Table of Contents.

b. The Group Assembly Parts List (Section II) consists of the complete engine divided into 17 main groups as shown in the Table of Contents. Each major assembly and subassembly of the complete engine is assigned to and listed with associated parts in one of the main groups. Each assembly listed is followed immediately by its component parts properly indented thereunder to show their relationship to the assembly. Component parts of the complete engine which are not included in any assembly but which are used in conjunction with, attach, or attach to a certain assembly are listed immediately following the last detail of that assembly and in line with the major assembly.

c. The quantities listed in the "Units per Assy" column of the Group Assembly Parts List are, in the case of part numbers having the nomenclature starting in column 1, the total quantity used per engine at the location described by the nomenclature. Part numbers having the nomenclature starting in columns 2, 3, 4, 5, 6 or 7 list the quantity used per assembly. The quantities specified, therefore, are not necessarily the total used per engine. Refer to the Numerical Parts List (Section III) and the Standard Parts List (Section IV) for the total quantities used per engine.

d. Part numbers are used exclusively to identify parts.

e. The index numbers appearing on the illustrations are numerically arranged in the Group Assembly Parts List. The figure number of the specific illustration and the index number appear in a column preceding the part number. Figure and index numbers facilitate reference between illustration and text.

f. The Table of Contents at the front of the catalog shows the method of grouping the parts and the sequence of the groups.

g. Notes such as "Supersedes," "No longer supplied," etc., refer to future procurements and will be disregarded by overhaul personnel in the absence of separate specific instructions concerning the use of such items. All dimensions shown herein are nominal. They are inserted to facilitate identification for ordering and are not to be construed as restrictive in inspection.

h. Various items of equipment such as spark plugs, carburetors, magnetos, etc., are listed under the vendor's part number with the Wright part number in parentheses following the description.. When ordering or installing equipment for these engines, consult the Handbook of Service Instructions, AN 02-35GC-2 and 3 and the individual equipment Technical Orders referred to therein.

2. REPLACEMENT STUDS

a. The part numbers of any given standard size stud and its oversizes are identical except for the letter designations. These letter designations and the markings used for identification are as follows:

Letter Designation	*Size*	*Identification Marking*
xxxxDx	Standard	Plain end
xxxxHx	.003 in. OS OD	Pointed end
xxxxSx	.007 in. OS OD	Countersunk end
xxxxJx	.012 in. OS OD	Drilled end, $^3/_{32}$ in. hole, $^3/_{32}$ in. deep

b. Where "D" (Standard Size) studs are listed in the Group Assembly Parts List preceded by a ¢ symbol, "H" (.003 in. OS) studs are to be used as the first replacement of the "D" studs originally installed in the engine.

3. FRONT AND REAR

The terms "front" and "rear" are determined by considering the propeller end of the engine as the front, and the anti-propeller end as the rear.

4. RIGHT AND LEFT

The terms "right" and "left" in connection with parts listed in this catalog refer to the viewpoint from the rear of the engine.

5. CYLINDER NUMBERS

Viewing the engine from the rear, cylinders are

numbered in a clockwise rotation, the top cylinder being number one.

6. ABBREVIATIONS

The abbreviations used throughout this catalog are as follows:

Abbreviations	*Full Name*
AR	As Required
ID	Inside Diameter
LH	Left Hand
No.	Number
OD	Outside Diameter
OS	Oversize
Quant.	Quantity
RH	Right Hand
US	Undersize

7. SYMBOLS

The symbols used throughout this catalog and their explanations are as follows:

@	Indicates a part no longer furnished.
±	Indicates a part available in overside and/or undersize.
¢	Indicates a standard size part not sold for replacement. Use oversize as required.
#	Indicates that quantity used varies.
*	Not to be stocked or requisitioned as detail parts.
AR	Indicates "As required." Usually identical with quantity listed for preceding standard part.
a, b, c, etc.	Indicates that explanation appears as footnote on page.

8. ENGINE NUMBERS

In listing engines throughout this catalog the word "inclusive" has not been used. It will be understood that all groups of engine numbers, such as 31651 to 31674, include the engines from 31651 up to 31674, inclusive.

AVIALOGS
WWW.AVIALOGS.COM

SECTION II

GROUP ASSEMBLY PARTS LIST

Fig. No.	Index Number	Part Number	Nomenclature 1 2 3 4 5 6 7	Units Per Assy—Model R1820 -40	-40B	-54	-60	-65	-71	-73	-87	-95	-97

CRANKCASE AND SUPERCHARGER SECTIONS

CRANKCASE FRONT SECTION

	@	411775	CRANKCASE FRONT SECTION STUDDING ASSEMBLY.....	1	–	–	–	–	–	–	1	–
			Factory installed on the following engines: -*40* (31651 to 31674, 31676 to 31722, 45777 to 45876 and 45879 to 45887) -*95* (31732, 31733, 31741 to 31748, 31750 to 31752, 31805, 31812, 31814, 31818 and 31823) *Superseded by 421711.*									
	@	415779	CRANKCASE FRONT SECTION STUDDING ASSEMBLY.....	1	1	–	1	–	1	–	1	1	–
			Factory installed on the following engines: -*40* (45888 to 45928, 45932 to 45934, 94528 to 94552, 152790 to 152799, 152818 to 152823 and 152854 to 152913) -*40B* (80361 to 80372 and 94578 to 94682) -*60* (73229 to 73279, 73304 to 73362, 88168 to 88196, 155763 to 155788 and 156289 to 156345) -*71* (41442, 41443, 41469 to 41486, 41510 to 41514, 45545 to 45549, 45560, 152629 to 152667, 152772 to 152787, 152802 to 152805, 152810 to 152817, 152824 to 152839, 152842 to 152853 and 152944 to 152975) -*87* (45457 to 47466, 73155 to 73228, 73280 to 73303, 79867 to 80136, 80302 to 80360, 86997 to 87532, 87546 to 87643, 87658 to 87762, 87779 to 87857, 93880 to 94207, 152821 to 152823 and 153086 to 153105) -*95* (80373 to 80376) *Superseded by 421711.*									
	@	416041	CRANKCASE FRONT SECTION STUDDING ASSEMBLY.....	–	–	–	–	–	–	1	–	–	–
			Factory installed on all -73 engines. *Superseded by 421711.*										
	@	416375	CRANKCASE FRONT SECTION STUDDING ASSEMBLY.....	–	–	–	–	1	–	–	–	–	1
			Factory installed on all -65 engines and on the following engines: -*97* (69425 to 70802, 70810 to 70816, 70865 to 71301, 71387 to 71393, 71395 to 71410, 71412, 71413, 71415 to 71418, 71420 to 71449, 71451 to 71455, 71457 to 71461, 71463 to 71465, 71467, 71468, 71474, 71476 and 71478) *416375 as supplied on late engines included screw bushings and .500 in.-20 plugs in the oil flow check holes.* *416375 did not originally include screw bushings but had the holes plugged with .625 in.-18 plugs.* *Superseded by 421710.*									

Fig. No.	Index Number	Part Number	Nomenclature 1 2 3 4 5 6 7	Units Per Assy—Model R1820 -40	-40B	-54	-60	-65	-71	-73	-87	-95	-97
		@ 415798	CRANKCASE FRONT SECTION STUDDING ASSEMBLY..... *Factory installed on the following engines:* *-97* (70803 to 70809, 70817 to 70864, 71302 to 71386, 71394, 71411, 71414, 71419, 71450, 71456, 71462, 71466, 71469 to 71473, 71475 to 71477, 71479 to 72946, 80787 to 81084 and 81105 to 81164) *Superseded by 421710.*	–	–	–	–	–	–	–	–	–	1
		@ 420145	CRANKCASE FRONT SECTION STUDDING ASSEMBLY..... *Factory installed on the following engines:* *-54* (86727 to 86866 and 429167 to 429196) *-97* (47467, 72947 to 73154, 81085 to 81104, 81165 to 81234, 81236 to 82306 and 190066 to 190522) *Superseded by 421710.*	–	–	1	–	–	–	–	–	–	1
		@ 420146	CRANKCASE FRONT SECTION STUDDING ASSEMBLY..... *Factory installed on the following engines:* *-40* (94553 to 94567 and 152914 to 152943) *-60* (47468, 47469, 73363 to 73429, 73432 to 73914, 80137 to 80279, 155789 to 155817, 155824 to 155879, 156346 to 158093, 183147 to 183464, 425321 to 426720 and 454477 to 455407) *-71* (152796 to 153085) *-87* (87644 to 87657, 87763 to 87778, 88098 to 88167, 94208 to 94527, 94568 to 94577, 152491 to 152555, 153106 to 153210, 183060 to 183146 and 189949 to 190065) *Superseded by 421711.*	1	–	–	1	–	1	–	1	–	–
1	1001	421710	CRANKCASE FRONT SECTION STUDDING ASSEMBLY..... *Factory installed on the following engines:* *-54* (429197 to 429376 and 452267 to 452378)	–	–	1	–	1	–	–	–	–	1
2	1003	421711	CRANKCASE FRONT SECTION STUDDING ASSEMBLY..... *Not factory installed on any engines. 421711 supersedes and is supplied for replacement of assemblies 411775, 415779, 416041 and 420146.*	1	1	–	1	–	1	1	1	1	–
		* 412384	CRANKCASE FRONT SECTION MACHINING ASSEMBLY..... *Part of assemblies 411775 and 416041.*	1	–	–	–	–	1	1	–	–	–
		* 415776	CRANKCASE FRONT SECTION MACHINING ASSEMBLY..... *Part of assemblies 415779, 415798 and 416375.*	1	1	–	1	1	1	–	1	1	1
		* 420144	CRANKCASE FRONT SECTION MACHINING ASSEMBLY..... *Part of assemblies 420145 and 420146.*	1	–	1	1	–	–	–	–	–	1
		* 421709N1	CRANKCASE FRONT SECTION MACHINING ASSEMBLY..... *Part of assemblies 421710 and 421711.*	1	1	1	1	1	1	1	1	1	1
		* 69223	CRANKCASE FRONT SECTION..... *Part of assembly 412384.*	1	–	–	–	–	1	1	–	–	–
		* 113204	CRANKCASE FRONT SECTION..... *Part of assembly 415776.*	1	1	–	1	1	1	–	1	1	1
		* 118227	CRANKCASE FRONT SECTION..... *Part of assembly 420144.*	1	–	1	1	–	–	–	–	–	1
		* 127628N1	CRANKCASE FRONT SECTION..... *Part of assembly 421709N1.*	1	1	1	1	1	1	1	1	1	1
		* 64560	RETAINER—Propeller shaft thrust bearing.....	1	1	1	1	1	1	1	1	1	1
		* 146D2	PIN—Propeller shaft thrust bearing retainer.....	1	1	1	1	1	1	1	1	1	1
26	1005	64814	BUSHING—Governor intermediate drive gear shaft.....	1	1	1	1	1	1	1	1	1	1

AVIATIONGS WWW.AVIATIONGS.COM

Fig. No.	Index Number	Part Number	Nomenclature 1 2 3 4 5 6 7	Units Per Assy—Model R1820 -40	-40B	-54	-60	-65	-71	-73	-87	-95	-97
1,2	1007	¢ 4015D6	BUSHING—Crankcase front section oil flow check hole plug, screw, standard size..... *Read note under front section 416375.*	2	2	2	2	2	2	2	2	2	2
		4015H6	BUSHING—Same as 4015D6 except .003 in. OS OD.....	AR	AR	AR	AR	AR	AR	AR	AR	AR	AR
		4015S6	BUSHING—Same as 4015D6 except .007 in. OS OD.....	AR	AR	AR	AR	AR	AR	AR	AR	AR	AR
		4015J6	BUSHING—Same as 4015D6 except .012 in. OS OD.....	AR	AR	AR	AR	AR	AR	AR	AR	AR	AR
1,2	1008	¢ 4015D3	BUSHING—Spinner afterbody plug, screw, standard size..... *Part of assembly 421709N1.*	10	10	10	10	10	10	10	10	10	10
		4015H3	BUSHING—Same as 4015D3 except .003 in. OS OD.....	AR	AR	AR	AR	AR	AR	AR	AR	AR	AR
		4015S3	BUSHING—Same as 4015D3 except .007 in. OS OD.....	AR	AR	AR	AR	AR	AR	AR	AR	AR	AR
		4015J3	BUSHING—Same as 4015D3 except .012 in. OS OD.....	AR	AR	AR	AR	AR	AR	AR	AR	AR	AR

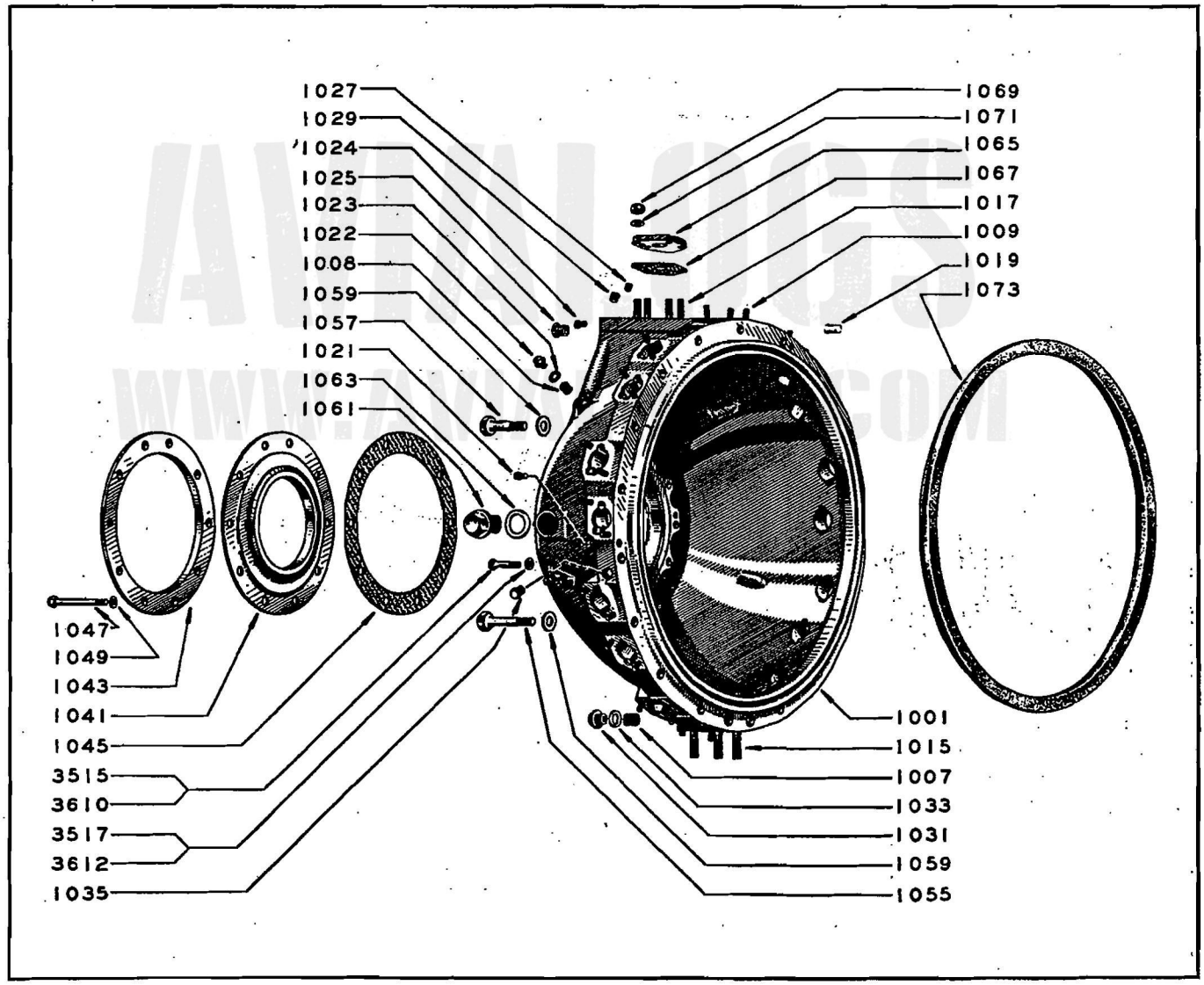

Numbers shown are index numbers and are numerically arranged in the Group Assembly Parts List

Figure 1—Crankcase Front Section (For Direct Drive and 16:9 Reduction Gear)

Fig. No.	Index Number	Part Number	Nomenclature 1 2 3 4 5 6 7	Units Per Assy—Model R1820 -40	-40B	-54	-60	-65	-71	-73	-87	-95	-97
1,2	1009	¢ 118D2	STUD—Crankcase front section to valve tappet guide, standard size	36	36	36	36	36	36	36	36	36	36
		118H2	STUD—Same as 118D2 except .003 in. OS OD	AR	AR	AR	AR	AR	AR	AR	AR	AR	AR
		118S2	STUD—Same as 118D2 except .007 in. OS OD	AR	AR	AR	AR	AR	AR	AR	AR	AR	AR
		118J2	STUD—Same as 118D2 except .012 in. OS OD	AR	AR	AR	AR	AR	AR	AR	AR	AR	AR
2	1011	¢ 126D145	STUD—Crankcase front section to crankcase front section flange, standard size. *Part of assemblies 411775, 415779, 416041, 420146 and 421711.*	2	2	–	2	–	2	2	2	2	–
		126H145	STUD—Same as 126D145 except .003 in. OS OD	AR	AR	–	AR	–	AR	AR	AR	AR	–
		126S145	STUD—Same as 126D145 except .007 in. OS OD	AR	AR	–	AR	–	AR	AR	AR	AR	–
		126J145	STUD—Same as 126D145 except .012 in. OS OD	AR	AR	–	AR	–	AR	AR	AR	AR	–
2	1013	¢ 2032D7	STUD—Crankcase front section to stationary reduction gear, standard size. *Part of assemblies 411775, 415779, 416041, 420146 and 421711.*	2	2	–	2	–	2	2	2	2	–
		2032H7	STUD—Same as 2032D7 except .003 in. OS OD	AR	AR	–	AR	–	AR	AR	AR	AR	–
		2032S7	STUD—Same as 2032D7 except .007 in. OS OD	AR	AR	–	AR	–	AR	AR	AR	AR	–
		2032J7	STUD—Same as 2032D7 except .012 in. OS OD	AR	AR	–	AR	–	AR	AR	AR	AR	–
1,2	1015	¢ 2031D20	STUD—Crankcase front section to oil sump, standard size	3	3	3	3	3	3	3	3	3	3

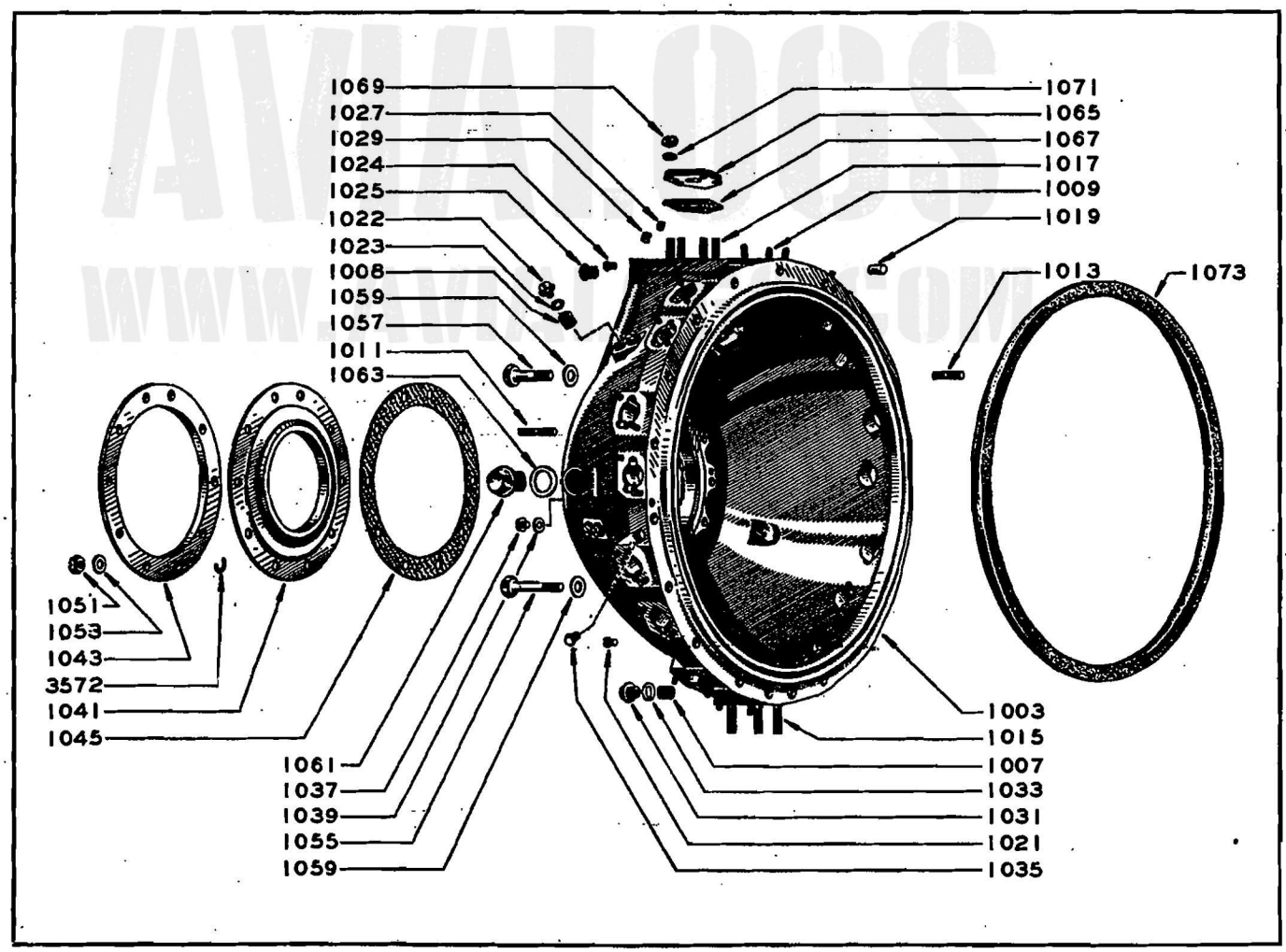

Numbers shown are index numbers and are numerically arranged in the Group Assembly Parts List

Figure 2—Crankcase Front Section (For 3:2 Reduction Gear)

Fig. No.	Index Number	Part Number	Nomenclature 1 2 3 4 5 6 7	Units Per Assy—Model R1820 -40	-40B	-54	-60	-65	-71	-73	-87	-95	-97
		2031H20	STUD—Same as 2031D20 except .003 in. OS OD	AR	AR	AR	AR	AR	AR	AR	AR	AR	AR
		2031S20	STUD—Same as 2031D20 except .007 in. OS OD	AR	AR	AR	AR	AR	AR	AR	AR	AR	AR
		2031J20	STUD—Same as 2031D20 except .012 in. OS OD	AR	AR	AR	AR	AR	AR	AR	AR	AR	AR
1,2	1017	∉ 2135D100	STUD—Crankcase front section to governor drive housing or substituting cover, standard size	4	4	4	4	4	4	4	4	4	4
		2135H100	STUD—Same as 2135D100 except .003 in. OS OD	AR	AR	AR	AR	AR	AR	AR	AR	AR	AR
		2135S100	STUD—Same as 2135D100 except .007 in. OS OD	AR	AR	AR	AR	AR	AR	AR	AR	AR	AR
		2135J100	STUD—Same as 2135D100 except .012 in. OS OD	AR	AR	AR	AR	AR	AR	AR	AR	AR	AR
1,2	1019	70D3	PIN—Crankcase front section to crankcase main section locating	1	1	1	1	1	1	1	1	1	1
1,2	1021	2070D64	SCREW—Crankcase front section puller substituting. *Part of assemblies 415779, 415798, 416375, 420145, 420146, 421710 and 421711.*	3	3	3	3	3	3	3	3	3	3
1,2	1022	2125D2	PLUG—Spinner afterbody screw bushing. *Part of assemblies 421710 and 421711.*	10	10	10	10	10	10	10	10	10	10
1,2	1023	AN900-5	GASKET—Spinner afterbody screw bushing plug (Wright Part No. 23D17). *Part of assemblies 421710 and 421711.*	10	10	10	10	10	10	10	10	10	10
1,2	1024	4042D1	PLUG—Crankcase front section governor oil line, pipe (.125 in. hex head)	1	1	1	1	1	1	1	1	1	1
1,2	1025	36D7	PLUG—Crankcase front section governor oil line, pipe (.250 in. hex head)	1	1	1	1	1	1	1	1	1	1
1,2	1027	2142D1	PLUG—Crankcase front section governor oil line, pipe (.125 in. headless)	1	1	1	1	1	1	1	1	1	1
1,2	1029	2142D2	PLUG—Crankcase front section governor oil line, pipe (.250 in. headless)	1	1	1	1	1	1	1	1	1	1
		2126D1	PLUG—Crankcase front section oil flow check hole (.625 in.-18). *Read note under front section 416375.*	–	–	–	–	2	–	–	–	–	2
		AN900-10	GASKET—Crankcase front section oil flow check hole plug (.625 in. x .875 in. x .094 in.) (Wright Part No. 23D16). *Used with plug 2126D1.*	–	–	–	–	2	–	–	–	–	2
1,2	1031	2125D5	PLUG—Crankcase front section oil flow check hole (.500 in.-20). *Read note under front section 416375.*	2	2	2	2	2	2	2	2	2	2
1,2	1033	AN900-8	GASKET—Crankcase front section oil flow check hole plug (.508 in. x .758 in. x .094 in.) (Wright Part No. 23D31). *Used with plug 2125D5.*	2	2	2	2	2	2	2	2	2	2
1,2	1035	36D7	PLUG—Crankcase front section hydro-oil supply tube substituting. *Part of assemblies 420145, 420146, 421710 and 421711.*	1	1	1	1	1	1	1	1	1	1
2	1037	2125D3	PLUG—Crankcase front section hole (under flange). *Part of assemblies 411775, 415779, 416041, 420146 and 421711.*	2	2	–	2	–	2	2	2	2	–
2	1039	27D67	WASHER—Crankcase front section hole plug. *Part of assemblies 411775, 415779, 416041, 420146 and 421711.*	2	2	–	2	–	2	2	2	2	–
		28322	PLATE—Valve tappet removal caution	1	1	1	1	1	1	1	1	1	1
		AN430-AD4-9	RIVET—Valve tappet removal caution plate to crankcase front section (Wright Part No. 66D59)	2	2	2	2	2	2	2	2	2	2
		64850	PLATE—Patent name	1	1	1	1	1	1	1	1	1	1
		AN430-AD4-9	RIVET—Patent name plate to crankcase front section (Wright Part No. 66D59)	4	4	4	4	4	4	4	4	4	4
		@ 63996	FLANGE—Crankcase front section (early type). *Superseded by 111370.*	1	1	–	1	1	1	1	1	1	1
1,2	1041	111370	FLANGE—Crankcase front section (late type)	1	1	1	1	1	1	1	1	1	1

AVIATIONGS
WWW.AVIATIONGS.COM

Fig. No.	Index Number	Part Number	Nomenclature 1 2 3 4 5 6 7	Units Per Assy—Model R1820 -40	-40B	-54	-60	-65	-71	-73	-87	-95	-97
1,2	1043	63997	SPACER—Crankcase front section flange.....	1	1	1	1	1	1	1	1	1	1
1,2	1045	63998	GASKET—Crankcase front section flange.....	1	1	1	1	1	1	1	1	1	1
1	1047	2057D17	SCREW—Stationary reduction gear or propeller shaft support retainer and crankcase front section flange to crankcase front section....	–	–	10	–	10	–	–	–	–	10
1	1049	34D14	WASHER—Stationary reduction gear or propeller shaft support retainer and crankcase front section flange to crankcase front section....	–	–	10	–	10	–	–	–	–	10
2	1051	1D91	NUT—Crankcase front section flange bolt and stud	10	10	–	10	–	10	10	10	10	–
2	1053	34D14	WASHER—Crankcase front section flange bolt and stud.....	10	10	–	10	–	10	10	10	10	–
1,2	1055	2045D22	SCREW—Crankcase front section to crankcase main section, long.....	8	8	8	8	8	8	8	8	8	8
1,2	1057	2045D21	SCREW—Crankcase front section to crankcase main section, short.....	8	8	8	8	8	8	8	8	8	8
1,2	1059	34D16	WASHER—Crankcase front section to crankcase main section..... *Engines having a two piece ignition cable require 16 washers.* *Engines having a one piece ignition cable require 10 washers.*	#	#	#	#	#	#	#	#	#	#
1,2	1061	93D16	PLUG—Crankcase front section timing hole.....	1	1	1	1	1	1	1	1	1	1
1,2	1063	AN900-18	GASKET—Crankcase front section timing hole plug (Wright Part No. 23D2).....	1	1	1	1	1	1	1	1	1	1
	@	69829	COVER—Governor substituting..... *Superseded by 118433N3.*	–	–	–	–	1	–	–	–	–	1

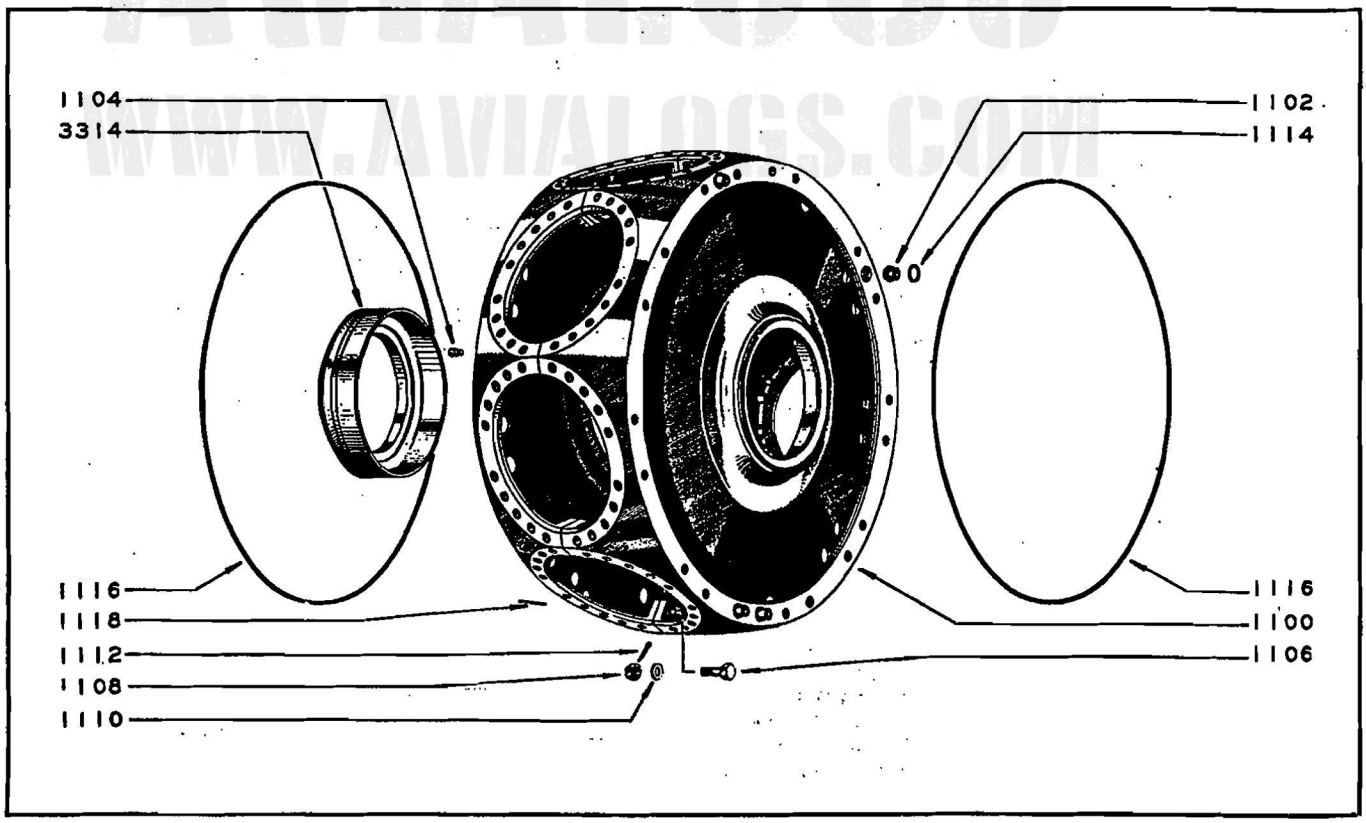

Numbers shown are index numbers and are numerically arranged in the Group Assembly Parts List

Figure 3—Crankcase Main Section

Fig. No.	Index Number	Part Number	Nomenclature 1 2 3 4 5 6 7	Units Per Assy—Model R1820 -40	-40B	-54	-60	-65	-71	-73	-87	-95	-97
		@ 112984	COVER—Governor substituting..... *Superseded by 118433N3.*	1	1	1	1	1	1	1	1	1	1
		@ 118433	COVER—Governor substituting..... *Superseded by 118433N3.*	1	1	1	1	1	1	1	1	1	1
1, 2	1065	118433N3	COVER—Governor substituting.....	1	1	1	1	1	1	1	1	1	1
1, 2	1067	63867	GASKET—Governor or substituting cover.....	1	1	1	1	1	1	1	1	1	1
1, 2	1069	4040D5	NUT—Governor or substituting cover to crankcase front section.....	4	4	4	4	4	4	4	4	4	4
1, 2	1071	34D33	WASHER—Governor or substituting cover to crankcase front section.....	4	4	4	4	4	4	4	4	4	4
1, 2	1073	69222	RING—Crankcase front section to crankcase main section oil seal, inner, flanged.....	1	1	1	1	1	1	1	1	1	1
			CRANKCASE MAIN SECTION										
3	1100	412717	CRANKCASE MACHINING ASSEMBLY—Main section.....	1	1	1	1	1	1	1	1	1	1
		* 116429	CRANKCASE—Main front section.....	1	1	1	1	1	1	1	1	1	1
		* 116430	CRANKCASE—Main rear section.....	1	1	1	1	1	1	1	1	1	1
		* 68307	RING—Crankcase main rear bearing.....	1	1	1	1	1	1	1	1	1	1
3	1102	68332	DOWEL—Crankcase main section to crankcase front section and supercharger front housing, hollow.....	6	6	6	6	6	6	6	6	6	6
3	1104	2037D21	PIN—Cam support locating.....	1	1	1	1	1	1	1	1	1	1
3	1106	2045D19	BOLT—Crankcase main rear section to crankcase main front section.....	9	9	9	9	9	9	9	9	9	9
3	1108	2101D6	NUT—Crankcase main rear section to crankcase main front section.....	9	9	9	9	9	9	9	9	9	9
3	1110	34D131	WASHER—Crankcase main rear section to crankcase main front section.....	9	9	9	9	9	9	9	9	9	9
3	1112	58D3	COTTER PIN—Crankcase main rear section to crankcase main front section nut.....	9	9	9	9	9	9	9	9	9	9
3	1114	2083D1	RING—Crankcase main section to crankcase front section and supercharger front housing hollow dowel.....	6	6	6	6	6	6	6	6	6	6
3	1116	68415	RING—Crankcase main section to crankcase front section and supercharger front housing oil seal, outer, plain.....	2	2	2	2	2	2	2	2	2	2
		@ 112354	PACKING—Crankcase main section oil seal (cylinder pad parting surface) (early type)..... *Superseded by 116869.*	9	–	–	–	–	9	–	–	9	–
3	1118	116869	PACKING—Crankcase main section oil seal (cylinder pad parting surface) (late type).....	9	9	9	9	9	9	9	9	9	9
			SUPERCHARGER FRONT HOUSING										
4	1150	411811	HOUSING STUDDING ASSEMBLY—Supercharger front.....	1	1	1	1	1	1	1	1	1	1
		411736	VALVE ASSEMBLY COMPLETE—Supercharger front housing breather relief...	1	1	1	1	1	1	1	1	1	1
4	1152	68421	VALVE—Supercharger front housing breather relief.....	1	1	1	1	1	1	1	1	1	1
4	1154	68422	SEAT—Supercharger front housing breather relief valve.....	1	1	1	1	1	1	1	1	1	1
4	1156	68423	STEM—Supercharger front housing breather relief valve.....	1	1	1	1	1	1	1	1	1	1
4	1158	68424	SPRING—Supercharger front housing breather relief valve.....	1	1	1	1	1	1	1	1	1	1
4	1160	385-50-5	PIN—Supercharger front housing breather relief valve stem, taper (Wright Part No. 2130D1).....	1	1	1	1	1	1	1	1	1	1
		* 68296	HOUSING—Supercharger front.....	1	1	1	1	1	1	1	1	1	1

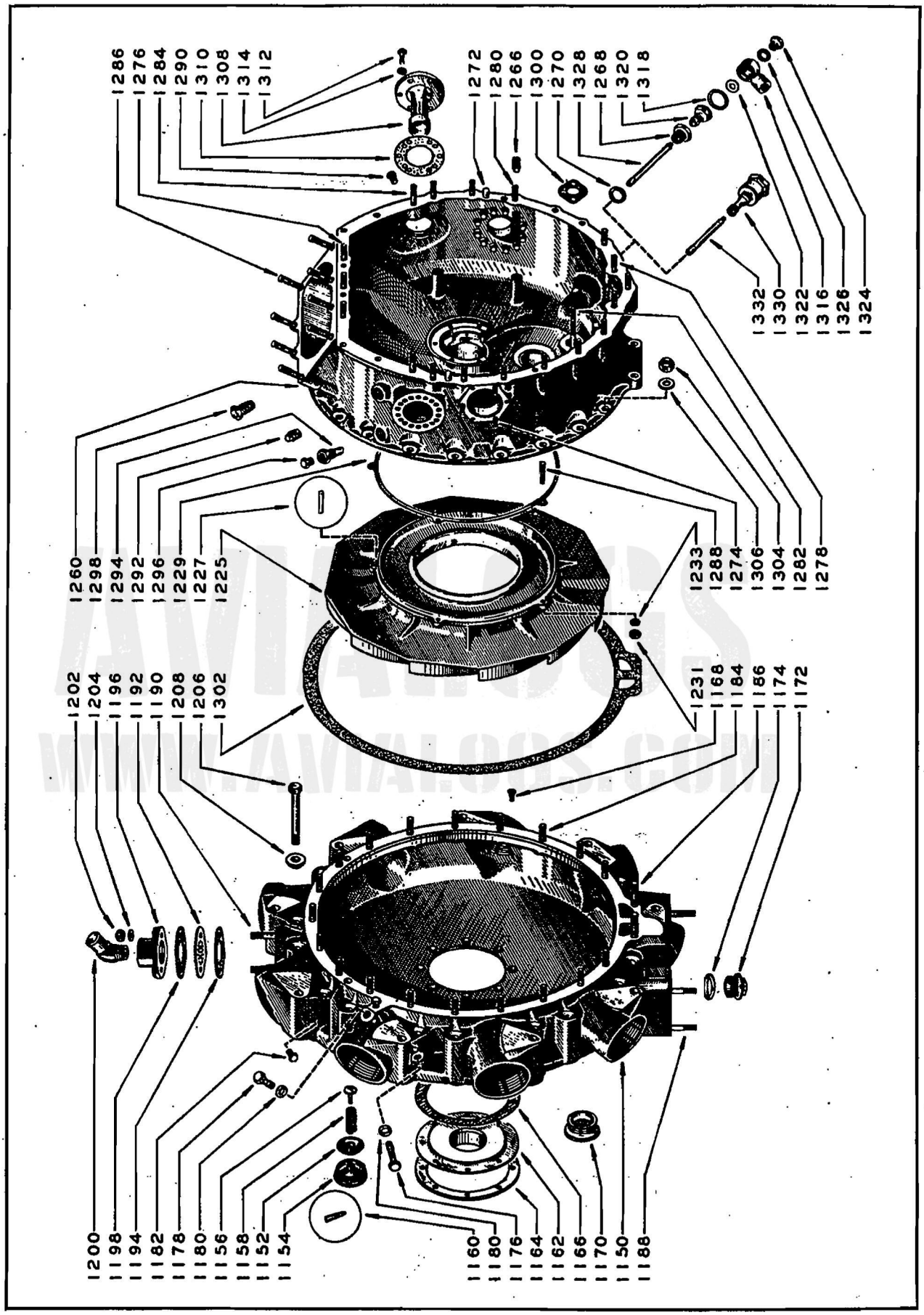

Numbers shown are index numbers and are numerically arranged in the Group Assembly Parts List

Figure 4—Supercharger Housings and Diffuser Plate

Fig. No.	Index Number	Part Number	Nomenclature 1 2 3 4 5 6 7	Units Per Assy—Model R1820 -40	-40B	-54	-60	-65	-71	-73	-87	-95	-97
4	1162	68364	SUPPORT—Impeller shaft bearing	1	1	1	1	1	1	1	1	1	1
4	1164	68365	RING—Impeller shaft bearing support	1	1	1	1	1	1	1	1	1	1
4	1166	68366	GASKET—Impeller shaft bearing support	1	1	1	1	1	1	1	1	1	1
4	1168	56D10	SCREW—Impeller shaft bearing support to supercharger front housing	8	8	8	8	8	8	8	8	8	8
4	1170	67316	PLUG—Supercharger front housing core hole.	5	5	5	5	5	5	5	5	5	5
4	1172	5037D6	PLUG—Supercharger front housing oil drain	1	1	1	1	1	1	1	1	1	1
4	1174	AN900-20	GASKET—Supercharger front housing oil drain plug (Wright Part No. 23D25)	1	1	1	1	1	1	1	1	1	1
4	1176	163D50	PLUG—Supercharger front housing primer substituting, long	1	1	1	1	1	1	1	1	1	1
4	1178	163D51	PLUG—Supercharger front housing primer substituting, short	1	1	1	1	1	1	1	1	1	1
4	1180	23D30	GASKET—Supercharger front housing primer substituting plug	2	2	2	2	2	2	2	2	2	2
4	1182	4042D1	PLUG—Supercharger front housing primer gage and connection	3	3	3	3	3	3	3	3	3	3
4	1184	¢ 2031D22	STUD—Supercharger front housing to supercharger rear housing, short, standard size	19	19	19	19	19	19	19	19	19	19
		2031H22	STUD—Same as 2031D22 except .003 in. OS OD	AR	AR	AR	AR	AR	AR	AR	AR	AR	AR
		2031S22	STUD—Same as 2031D22 except .007 in. OS OD	AR	AR	AR	AR	AR	AR	AR	AR	AR	AR
		2031J22	STUD—Same as 2031D22 except .012 in. OS OD	AR	AR	AR	AR	AR	AR	AR	AR	AR	AR
4	1186	¢ 2031D20	STUD—Supercharger front housing to supercharger rear housing, long (at oil drain section), standard size	2	2	2	2	2	2	2	2	2	2
		2031H20	STUD—Same as 2031D20 except .003 in. OS OD	AR	AR	AR	AR	AR	AR	AR	AR	AR	AR
		2031S20	STUD—Same as 2031D20 except .007 in. OS OD	AR	AR	AR	AR	AR	AR	AR	AR	AR	AR
		2031J20	STUD—Same as 2031D20 except .012 in. OS OD	AR	AR	AR	AR	AR	AR	AR	AR	AR	AR
4	1188	¢ 2031D20	STUD—Supercharger front housing to oil sump, standard size	4	4	4	4	4	4	4	4	4	4
		2031H20	STUD—Same as 2031D20 except .003 in. OS OD	AR	AR	AR	AR	AR	AR	AR	AR	AR	AR
		2031S20	STUD—Same as 2031D20 except .007 in. OS OD	AR	AR	AR	AR	AR	AR	AR	AR	AR	AR
		2031J20	STUD—Same as 2031D20 except .012 in. OS OD	AR	AR	AR	AR	AR	AR	AR	AR	AR	AR
4	1190	¢ 2031D22	STUD—Supercharger front housing to breather or substituting flange, standard size	2	2	2	2	2	2	2	2	2	2
		2031H22	STUD—Same as 2031D22 except .003 in. OS OD	AR	AR	AR	AR	AR	AR	AR	AR	AR	AR
		2031S22	STUD—Same as 2031D22 except .007 in. OS OD	AR	AR	AR	AR	AR	AR	AR	AR	AR	AR
		2031J22	STUD—Same as 2031D22 except .012 in. OS OD	AR	AR	AR	AR	AR	AR	AR	AR	AR	AR
		114782	BUSHING—Engine mounting bolt. *For service use only when excessive wear is experienced in the engine mounting lug holes.*	9	9	9	9	9	9	9	9	9	9
		@ 411676	SCREEN ASSEMBLY—Supercharger front housing breather (early type). *Superseded by 69911.*	–	–	–	–	1	–	–	–	–	1
		* 68392	SCREEN—Supercharger front housing breather (early type)	–	–	–	–	1	–	–	–	–	1
		* 68393	FRAME—Supercharger front housing breather screen	–	–	–	–	1	–	–	–	–	1
4	1192	69911	SCREEN—Supercharger front housing breather (late type)	–	–	1	1	1	1	1	–	–	1
4	1194	129D78	GASKET—Supercharger front housing breather screen. *Used with screen 69911.*	–	–	1	1	1	1	1	–	–	1
4	1196	69332	FLANGE—Supercharger front housing breather	–	–	1	1	1	–	1	–	–	1
		68391	BREATHER—Supercharger front housing	–	–	–	–	–	1	–	–	–	–

Fig. No.	Index Number	Part Number	Nomenclature 1 2 3 4 5 6 7	Units Per Assy—Model R1820 -40	-40B	-54	-60	-65	-71	-73	-87	-95	-97
		130D50	FLANGE—Supercharger front housing breather substituting	1	1	–	–	–	–	–	1	1	–
4	1198	129D78	GASKET—Supercharger front housing breather, breather flange or substituting flange	1	1	1	1	1	1	1	1	1	1
		850-16	ELBOW—Supercharger front housing breather flange (90 degrees) (Wright Part No. 175D6) *Factory installed on -65 engines 29898 to 29919.*	–	–	–	–	1	–	–	–	–	–
4	1200	851-16	ELBOW—Supercharger front housing breather flange (45 degrees) (Wright Part No. 175D7) *Factory installed on all -54, -73 and -97 engines and all -65 engines except 29898 to 29919.*	–	–	1	–	1	–	1	–	–	1
		AN913-6S	PLUG—Supercharger front housing breather (Wright Part No. 2105D15)	–	–	–	1	–	–	–	–	–	–
4	1202	4040D6	NUT—Breather flange or substituting flange to supercharger front housing	2	2	2	2	2	2	2	2	2	2
4	1204	34D14	WASHER—Breather flange or substituting flange to supercharger front housing	2	2	2	2	2	2	2	2	2	2
		163D55	PLUG—Supercharger front housing primer discharge	–	–	–	–	–	–	–	–	1	–
4	1206	2045D14	SCREW—Supercharger front housing to crankcase main section	18	18	18	18	18	18	18	18	18	18
4	1208	2093D16	WASHER—Supercharger front housing to crankcase main section, spherical	18	18	18	18	18	18	18	18	18	18
			SUPERCHARGER DIFFUSER PLATE										
		412909	PLATE AND PIN ASSEMBLY—Diffuser *Factory installed on all -65, -73, -95 and -97 engines and on the following engines:* *-40* (31651 to 31674, 31676 to 31722 and 45777 to 45876) *-71* (41296 to 41298, 41418, 41480 to 41486, 41513, 41514, 44231 to 44241, 44296 to 44307, 152644 to 152649, 152787, 152826, 152828, 152946 and 152949 to 153085) *Superseded by 416452 on two-speed engines.*	1	–	–	–	1	1	1	–	1	1
4	1225	416452	PLATE AND PIN ASSEMBLY—Diffuser *Factory installed on all -40B, -54, -60 and -87 engines and on the following engines:* *-40* (45879 to 45928, 45932 to 45934, 94528 to 94567, 152790 to 152799, 152818 to 152820 and 152854 to 152943) *-71* (41442, 41443, 41469 to 41479, 41510 to 41512, 45545 to 45549, 45560, 152629 to 152643, 152650 to 152667, 152772 to 152786, 152802 to 152805, 152810 to 152817, 152825 to 152827, 152829 to 152839, 152842 to 152853, 152944, 152945, 152947 and 152948) *Superseded by 412909 on single-speed engines.*	1	1	1	1	–	1	–	1	1	–
		* 68554	PLATE—Diffuser *Part of assembly 412909.*	1	–	–	–	1	1	1	–	1	1
		* 113701N1	PLATE—Diffuser *Part of assembly 416452.*	1	1	1	1	–	1	–	1	1	–
4	1227	17D20	PIN—Diffuser plate locating	1	1	1	1	1	1	1	1	1	1
4	1229	112403	SHIM—Diffuser plate to supercharger rear housing *Normally one is required; however, two may be needed to obtain proper clearance.*	#	#	#	#	#	#	#	#	#	#
4	1231	2101D3	NUT—Diffuser plate to supercharger rear housing.	5	5	5	5	5	5	5	5	5	5
4	1233	34D51	WASHER—Diffuser plate to supercharger rear housing	5	5	5	5	5	5	5	5	5	5

AVIATIONS
WWW.AVIATIONS.COM

Fig. No.	Index Number	Part Number	Nomenclature 1 2 3 4 5 6 7	Units Per Assy—Model R1820 -40	-40B	-54	-60	-65	-71	-73	-87	-95	-97
			SUPERCHARGER REAR HOUSING										
	@	412366	HOUSING STUDDING ASSEMBLY—Supercharger rear.....	1	–	–	–	–	1	–	1	1	–
			Factory installed on the following engines:										
			-40 (31651 to 31674, 31676 to 31722, 45777 to 45876, 45879 to 45928, 45932 to 45934 and 152790 to 152799)										
			-71 (41296 to 41298, 41418, 41487 to 41506, 44231 to 44241 and 44296 to 44307)										
			-87 (73155 to 73171 and 73280 to 73303)										
			-95 (31732, 31733, 31741 to 31748, 31750 to 31752, 31805, 31812, 31814, 31818 and 31823)										
			412366 includes a supercharger drain valve bushing and drilled carburetor adapter attaching studs. It does not include a heater connection.										
			For replacement, make the following substitutions:										
			Use — Description — Remove — Quant.										
			421634 — *Housing Studding Assembly — Supercharger rear* — *412366* — *1*										
			4040D6 — *Nut — Carburetor adapter to supercharger rear housing* — *2101D5* — *8*										
			Cotter Pin — Carburetor adapter to supercharger rear housing nut — *58D3* — *8*										
	@	413526	HOUSING STUDDING ASSEMBLY—Supercharger rear.....	–	–	–	–	1	–	1	–	–	1
			Factory installed on all -73 engines and on the following engines:										
			-65 (29347, 29898 to 29997, 30018 to 30050, 41102 to 41122, 41124 to 41133, 41136 to 41267, 44242 to 44295, 45311 to 45387, 45394 to 45399, 45401 to 45474, 45939 to 47072, 47173 to 47247 and 47273 to 47375)										
			-97 (69425 to 69596 and 69997 to 70046)										
			413526 does not include a supercharger drain valve bushing or heater connection and has drilled carburetor adapter studs.										
			For replacement, make the following substitutions:										
			Use — Description — Remove — Quant.										
			421633 — *Housing Studding Assembly — Supercharger rear* — *413526* — *1*										
			4040D6 — *Nut — Carburetor adapter to supercharger rear housing* — *2101D5* — *8*										
			Cotter Pin — Carburetor adapter to supercharger rear housing nut — *58D3* — *8*										
	@	417514	HOUSING STUDDING ASSEMBLY—Supercharger rear.....	1	1	1	1	–	1	–	1	1	–
			Factory installed on all -40B engines and on the following engines:										
			-40 (94528 to 94567, 152818 to 152820 and 152854 to 152943)										
			-54 (86727 to 86793)										
			-60 (47468, 47469, 73229 to 73279, 73304 to 73429, 73432 to 73790, 73821 to 73914, 80137 to 80212, 88168 to 88196, 155763 to 155817, 155824 to 155879, 156289 to 158093, 183147 to 183464, 425321 to 425542, 425573 to 425885 and 426451 to 426720)										

AVIALOGS
WWW.AVIALOGS.COM

Fig. No.	Index Number	Part Number	Nomenclature 1 2 3 4 5 6 7	Units Per Assy—Model R1820 -40 -40B -54 -60 -65 -71 -73 -87 -95 -97
			-71 (41442, 41443, 41469 to 41486, 41510 to 41514, 45545 to 45549, 45560, 152629 to 152667, 152772 to 152787, 152802 to 152805, 152810 to 152817, 152824 to 152839, 152842 to 152853 and 152944 to 153085)	
			-95 (80373 to 80376)	
			Factory installed on all -87 engines except: (73155 to 73171 and 73280 to 73303)	
			417415 includes a supercharger drain valve bushing, heater connection and drilled carburetor adapter attaching studs.	
			For replacement, make the following substitutions:	
			Use — Description — Remove — Quant. *421634* — *Housing Studding Assembly — Supercharger rear* — *417514* — *1* *4040D6* — *Nut — Carburetor adapter to supercharger rear housing* — *2101D5* — *8* *Cotter Pin — Carburetor adapter to supercharger rear housing nut* — *58D3* — *8*	
		@ 417515	HOUSING STUDDING ASSEMBLY—Supercharger rear.....	– – – – 1 – – – – –
			Factory installed on the following engines:	
			-65 (44311 to 45310, 47073 to 47172, 47248 to 47272 and 47376 to 47456)	
			-97 (47467, 69597 to 69996, 70047 to 73154, 80787 to 81234, 81236 to 82306, 155818 to 155823 and 190066 to 190522)	
			417515 does not include a supercharger drain valve bushing and has drilled carburetor adapter attaching studs and a heater connection.	
			For replacement, make the following substitutions:	
			Use — Description — Remove — Quant. *421633* — *Housing Studding Assembly — Supercharger rear* — *417515* — *1* *4040D6* — *Nut — Carburetor adapter to supercharger rear housing* — *2101D5* — *8* *Cotter Pin — Carburetor adapter to supercharger rear housing nut* — *58D3* — *8*	
		421633	HOUSING STUDDING ASSEMBLY—Supercharger rear.....	– – – – 1 – 1 – – 1
			Not factory installed on any engines.	
			Supersedes and is supplied for replacement of assemblies 413526 and 417515.	
			421633 does not include a supercharger drain valve bushing and has plain carburetor adapter attaching studs and a heater connection.	
4	1260	421634	HOUSING STUDDING ASSEMBLY—Supercharger rear.....	1 1 1 1 – 1 – 1 1 –
			Factory installed on the following engines:	
			-54 (86794 to 86866, 429167 to 429376 and 452267 to 452378)	
			-60 (73791 to 73820, 80213 to 80279, 425543 to 425572, 425886 to 426450 and 454477 to 455407)	
			421634 includes a supercharger drain valve bushing, heater connection and plain carburetor adapter attaching studs.	

AVIATION BOOKS
WWW.AVIATIONBOOKS.COM

Fig. No.	Index Number	Part Number	Nomenclature 1 2 3 4 5 6 7	Units Per Assy—Model R1820 -40	-40B	-54	-60	-65	-71	-73	-87	-95	-97
		* 412365	HOUSING MACHINING ASSEMBLY—Supercharger rear. *Part of assembly 412366.*	1	–	–	–	–	1	–	1	1	–
		* 413525	HOUSING MACHINING ASSEMBLY—Supercharger rear. *Part of assembly 413526.*	–	–	–	–	1	–	1	–	–	1
		* 417518	HOUSING MACHINING ASSEMBLY—Supercharger rear. *Part of assemblies 417514 and 421634.*	1	1	1	1	–	1	–	1	1	–
		* 417519	HOUSING MACHINING ASSEMBLY—Supercharger rear. *Part of assemblies 417515 and 421633.*	–	–	–	–	1	–	1	–	–	1
		* 69169	HOUSING—Supercharger rear. *Part of assembly 412365.*	1	–	–	–	–	1	–	1	1	–
		* 110680	HOUSING—Supercharger rear. *Part of assembly 413525.*	–	–	–	–	1	–	1	–	–	1
		* 115528	HOUSING—Supercharger rear. *Part of assembly 417518.*	1	1	1	1	–	1	–	1	1	–
		* 115530	HOUSING—Supercharger rear. *Part of assembly 417519.*	–	–	–	–	1	–	1	–	–	1
		* 69246	SLEEVE—Supercharger rear housing impeller shaft	1	1	1	1	1	1	1	1	1	1
		147D4	SCREW—Supercharger rear housing impeller shaft sleeve	2	2	2	2	2	2	2	2	2	2
		27D30	WASHER—Supercharger rear housing impeller shaft sleeve. *Supersedes and supplied for replacement of 27D32.*	2	2	2	2	2	2	2	2	2	2
17, 18, 19	1262	29320	BUSHING—Impeller drive gear and pinion or intermediate impeller drive shaft front, standard size	1	1	1	1	1	1	1	1	1	1
		29320Y2	BUSHING—Same as 29320 except .010 in. OS OD	AR	AR	AR	AR	AR	AR	AR	AR	AR	AR
17, 18, 19	1264	13D55	PIN—Impeller drive gear and pinion or intermediate impeller drive shaft front bushing retaining	1	1	1	1	1	1	1	1	1	1
4	1266	¢ 19D16	BUSHING—Fuel pump mounting pad stud, screw, standard size	12	12	12	12	12	12	12	12	12	12
		19H16	BUSHING—Same as 19D16 except .003 in. OS OD	AR	AR	AR	AR	AR	AR	AR	AR	AR	AR
		19S16	BUSHING—Same as 19D16 except .007 in. OS OD	AR	AR	AR	AR	AR	AR	AR	AR	AR	AR
		19J16	BUSHING—Same as 19D16 except .012 in. OS OD	AR	AR	AR	AR	AR	AR	AR	AR	AR	AR
		29288	TUBE—Supercharger drain valve return tube extension	1	1	1	1	1	1	1	1	1	1
		68586	TUBE—Supercharger oil seal vent	1	1	1	1	1	1	1	1	1	1
		68587	TUBE—Supercharger manifold pressure	1	1	1	1	1	1	1	1	1	1
		4042D1	PLUG—Supercharger inlet air pressure gage substituting. *Part of assemblies 412365 and 413525.*	1	–	–	–	1	1	1	1	1	1
		29291	CLIP—Supercharger drain valve return tube extension tube	1	1	1	1	1	1	1	1	1	1
		132D1	SCREW—Supercharger drain valve return tube extension tube clip	1	1	1	1	1	1	1	1	1	1
4	1268	29292	BUSHING—Supercharger drain valve. *Part of assemblies 412366, 417514 and 421634.*	1	1	1	1	–	1	–	1	1	–
4	1270	37D26	WASHER—Supercharger drain valve bushing. *Part of assemblies 412366, 417514 and 421634.*	1	1	1	1	–	1	–	1	1	–
4	1272	70D6	PIN—Supercharger rear housing to supercharger rear cover locating	2	2	2	2	2	2	2	2	2	2
4	1274	¢ 2028D37	STUD—Supercharger rear housing to oil filter, standard size	3	3	3	3	3	3	3	3	3	3
		2028H37	STUD—Same as 2028D37 except .003 in. OS OD	AR	AR	AR	AR	AR	AR	AR	AR	AR	AR
		2028S37	STUD—Same as 2028D37 except .007 in. OS OD	AR	AR	AR	AR	AR	AR	AR	AR	AR	AR
		2028J37	STUD—Same as 2028D37 except .012 in. OS OD	AR	AR	AR	AR	AR	AR	AR	AR	AR	AR
4	1276	¢ 2030D10	STUD—Supercharger rear housing to supercharger rear cover, short, standard size	1	1	1	1	1	1	1	1	1	1

Fig. No.	Index Number	Part Number	Nomenclature 1 2 3 4 5 6 7	Units Per Assy—Model R1820 -40	-40B	-54	-60	-65	-71	-73	-87	-95	-97
		2030H10	STUD—Same as 2030D10 except .003 in. OS OD	AR	AR	AR	AR	AR	AR	AR	AR	AR	AR
		2030S10	STUD—Same as 2030D10 except .007 in. OS OD	AR	AR	AR	AR	AR	AR	AR	AR	AR	AR
		2030J10	STUD—Same as 2030D10 except .012 in. OS OD	AR	AR	AR	AR	AR	AR	AR	AR	AR	AR
4	1278	¢ 126D154	STUD—Supercharger rear housing to supercharger rear cover, long, standard size	2	2	2	2	2	2	2	2	2	2
		126H154	STUD—Same as 126D154 except .003 in. OS OD	AR	AR	AR	AR	AR	AR	AR	AR	AR	AR
		126S154	STUD—Same as 126D154 except .007 in. OS OD	AR	AR	AR	AR	AR	AR	AR	AR	AR	AR
		126J154	STUD—Same as 126D154 except .012 in. OS OD	AR	AR	AR	AR	AR	AR	AR	AR	AR	AR
4	1280	¢ 2029D67	STUD—Supercharger rear housing to supercharger rear cover, intermediate, plain, standard size. *2029D67 supersedes 2030D10 (1.44 in. long) and 2030D12 (1.56 in. long, drilled) at these locations.*	13	13	13	13	13	13	13	13	13	13
		2029H67	STUD—Same as 2029D67 except .003 in. OS OD	AR	AR	AR	AR	AR	AR	AR	AR	AR	AR
		2029S67	STUD—Same as 2029D67 except .007 in. OS OD	AR	AR	AR	AR	AR	AR	AR	AR	AR	AR
		2029J67	STUD—Same as 2029D67 except .012 in. OS OD	AR	AR	AR	AR	AR	AR	AR	AR	AR	AR
4	1282	¢ 2030D31	STUD—Supercharger rear housing to supercharger rear cover (at oil suction section), standard size	2	2	2	2	2	2	2	2	2	2
		2030H31	STUD—Same as 2030D31 except .003 in. OS OD	AR	AR	AR	AR	AR	AR	AR	AR	AR	AR
		2030S31	STUD—Same as 2030D31 except .007 in. OS OD	AR	AR	AR	AR	AR	AR	AR	AR	AR	AR
		2030J31	STUD—Same as 2030D31 except .012 in. OS OD	AR	AR	AR	AR	AR	AR	AR	AR	AR	AR
4	1284	¢ 2135D135	STUD—Supercharger rear housing to magneto (2.10 in. long), standard size. *2135D135 is the only type supplied for attaching the magneto. It supersedes and can be used in place of studs 126D137 (1.92 in. long) and 2135D130 (2.05 in. long) originally used at this location on some engines.*	2	2	2	2	2	2	2	2	2	2
		2135H135	STUD—Same as 2135D135 except .003 in. OS OD	AR	AR	AR	AR	AR	AR	AR	AR	AR	AR
		2135S135	STUD—Same as 2135D135 except .007 in. OS OD	AR	AR	AR	AR	AR	AR	AR	AR	AR	AR
		2135J135	STUD—Same as 2135D135 except .012 in. OS OD	AR	AR	AR	AR	AR	AR	AR	AR	AR	AR
		¢ 2139D145	STUD—Supercharger rear housing to carburetor adapter (drilled), standard size. *Part of assemblies 412366, 413526, 417514 and 417515.*	8	8	8	8	8	8	8	8	8	8
		2139H145	STUD—Same as 2139D145 except .003 in. OS OD	AR	AR	AR	AR	AR	AR	AR	AR	AR	AR
		2139S145	STUD—Same as 2139D145 except .007 in. OS OD	AR	AR	AR	AR	AR	AR	AR	AR	AR	AR
		2139J145	STUD—Same as 2139D145 except .012 in. OS OD	AR	AR	AR	AR	AR	AR	AR	AR	AR	AR
4	1286	¢ 2138D150	STUD—Supercharger rear housing to carburetor adapter (plain), standard size. *Part of assemblies 421633 and 421634.*	8	8	8	8	8	8	8	8	8	8
		2138H150	STUD—Same as 2138D150 except .003 in. OS OD	AR	AR	AR	AR	AR	AR	AR	AR	AR	AR
		2138S150	STUD—Same as 2138D150 except .007 in. OS OD	AR	AR	AR	AR	AR	AR	AR	AR	AR	AR
		2138J150	STUD—Same as 2138D150 except .012 in. OS OD	AR	AR	AR	AR	AR	AR	AR	AR	AR	AR
4	1288	¢ 2137D80	STUD—Supercharger rear housing to diffuser plate, standard size	5	5	5	5	5	5	5	5	5	5

AVIATIONS
WWW.AVIA.COM

Fig. No.	Index Number	Part Number	Nomenclature 1 2 3 4 5 6 7	Units Per Assy—Model R1820 -40	-40B	-54	-60	-65	-71	-73	-87	-95	-97
		2137H80	STUD—Same as 2137D80 except .003 in. OS OD	AR	AR	AR	AR	AR	AR	AR	AR	AR	AR
		2137S80	STUD—Same as 2137D80 except .007 in. OS OD	AR	AR	AR	AR	AR	AR	AR	AR	AR	AR
		2137J80	STUD—Same as 2137D80 except .012 in. OS OD	AR	AR	AR	AR	AR	AR	AR	AR	AR	AR
4	1290	4042D1	PLUG—Supercharger inlet air pressure gage substituting. *Part of assemblies 417514, 417515, 421633 and 421634.*	1	1	1	1	1	1	1	1	1	1
4	1292	AN913-3	PLUG—Supercharger rear housing oil tank vent hole (Wright Part No. 2105D3)	2	2	2	2	2	2	2	2	2	2
4	1294	126140	CONNECTION—Supercharger rear housing heater. *Part of assemblies 417514, 417515, 421633 and 421634.* *126140 supersedes and is supplied for replacement of 115243 installed on some early engines.*	2	2	2	2	2	2	2	2	2	2
4	1296	36D7	PLUG—Supercharger rear housing heater connection. *Part of assemblies 417514, 417515, 421633 and 421634.*	2	2	2	2	2	2	2	2	2	2
4	1298	411716	BREATHER ASSEMBLY—Supercharger oil seal vent	1	1	1	1	1	1	1	1	1	1
		* 68417	BREATHER—Supercharger oil seal vent	1	1	1	1	1	1	1	1	1	1
		* 2059D15	DISC—Supercharger oil seal vent breather	1	1	1	1	1	1	1	1	1	1
4	1300	129D66	GASKET—Supercharger rear housing oil suction flange to supercharger rear cover	1	1	1	1	1	1	1	1	1	1
4	1302	68413	GASKET—Supercharger rear housing to supercharger front housing	1	1	1	1	1	1	1	1	1	1
4	1304	4040D6	NUT—Supercharger rear housing to supercharger front housing. *Supersedes and supplied for replacement of nut 2D7 and palnut AN356-624 installed on some early engines.*	21	21	21	21	21	21	21	21	21	21
4	1306	34D14	WASHER—Supercharger rear housing to supercharger front housing	21	21	21	21	21	21	21	21	21	21
		@ 65965	COVER—Gun synchronizer impulse generator drive substituting. *Quantities used: Two units are used on all -40B, -71, -87 and -95 engines and on the following engines:* *-40* (31651 to 31668, 31676 to 31704, 31706 and 31712 to 31722) *-54* (86727 to 86866, 429167 to 429376 and 452267 to 452288) *-97* (47467, 81085 to 81104, 81712 to 81797, 81978 to 82306 and 190066 to 190522) *One unit is used on the following engines:* *-97* (72947 to 73154, 81177, 81179 to 81187, 81204, 81206, 81207, 81211, 81213, 81216, 81226, 81228, 81235, 81240, 81242, 81248, 81253, 81257, 81262, 81268, 81269, 81276, 81285 to 81290, 81292, 81295 to 81321, 81323 to 81326, 81328 to 81711 and 81798 to 81977) *For replacement, use 130142N3 and three each of 22D3 and 27D1.*	2	2	2	–	–	2	–	2	2	#
4	1308	130142N3	COVER—Gun synchronizer impulse generator drive substituting. *Factory installed on -54 engines 452289 to 452378.*	2	2	2	–	–	2	–	2	2	#
4	1310	27471	GASKET—Gun synchronizer impulse generator drive substituting cover. *Used with covers 65965 and 130142N3.*	2	2	2	–	–	2	–	2	2	#

AVIATIONGS
WWW.AVIATIONGS.COM

Fig. No.	Index Number	Part Number	Nomenclature 1 2 3 4 5 6 7	Units Per Assy—Model R1820 -40	-40B	-54	-60	-65	-71	-73	-87	-95	-97
4	1312	22D3	SCREW—Gun synchronizer impulse generator drive substituting cover to supercharger rear housing.....	#	#	#	–	–	#	–	#	#	#
			Three units used for each 65965 cover. Six units used for each 130142N3 cover.										
4	1314	27D1	WASHER—Gun synchronizer impulse generator drive substituting cover to supercharger rear housing.....	#	#	#	–	–	#	–	#	#	#
			Three units used for each 65965 cover. Six units used for each 130142N3 cover.										
			SUPERCHARGER DRAIN VALVE AND TUBE										
			Parts listed in this group were factory installed on all -40, -40B, -54, -60, -71, -87 and -95 engines.										
		45439	VALVE ASSEMBLY—Supercharger drain.....	1	1	1	1	–	1	–	1	1	–
4	1316	29519	HOUSING—Supercharger drain valve.....	1	1	1	1	–	1	–	1	1	–
4	1318	37D76	GASKET—Supercharger drain valve housing.	1	1	1	1	–	1	–	1	1	–
4	1320	61726	BODY—Supercharger drain valve.....	1	1	1	1	–	1	–	1	1	–
4	1322	29120	DISK—Supercharger drain valve.....	1	1	1	1	–	1	–	1	1	–
4	1324	29118	PLUG—Supercharger drain valve housing....	1	1	1	1	–	1	–	1	1	–
4	1326	37D12	WASHER—Supercharger drain valve housing plug.....	1	1	1	1	–	1	–	1	1	–
4	1328	45286	TUBE ASSEMBLY—Supercharger drain valve return.....	1	1	1	1	–	1	–	1	1	–
		* 29289	TUBE—Supercharger drain valve return.....	1	1	1	1	–	1	–	1	1	–
		* 29121	FITTING—Supercharger drain valve return tube.....	1	1	1	1	–	1	–	1	1	–
		* 29124	NIPPLE—Supercharger drain valve return tube.....	1	1	1	1	–	1	–	1	1	–
			Except where otherwise noted, all of the parts listed in this group were factory installed on all -65, -73 and -97 engines.										
4	1330	410727	VALVE ASSEMBLY—Supercharger drain.....	–	–	–	–	1	–	1	–	–	1
		410725	DISK AND PISTON ASSEMBLY—Supercharge drain valve.....	–	–	–	–	1	–	1	–	–	1
		* 67172	DISK—Supercharger drain valve.....	–	–	–	–	1	–	1	–	–	1
		* 67173	PISTON—Supercharger drain valve.....	–	–	–	–	1	–	1	–	–	1
		* 111667	RIVET—Supercharger drain valve disk and piston.....	–	–	–	–	2	–	2	–	–	2
		67168	HOUSING—Supercharger drain valve.....	–	–	–	–	1	–	1	–	–	1
		67170	SPRING—Supercharger drain valve.....	–	–	–	–	1	–	1	–	–	1
		67169	RETAINER—Supercharger drain valve stop and spring.....	–	–	–	–	1	–	1	–	–	1
		2019D8	CIRCLET—Supercharger drain valve stop and spring retainer.....	–	–	–	–	1	–	1	–	–	1
		67167	BODY—Supercharger drain valve.....	–	–	–	–	1	–	1	–	–	1
		2083D3	RING—Supercharger drain valve body.....	–	–	–	–	2	–	2	–	–	2
		5D9	BALL—Supercharger drain valve.....	–	–	–	–	2	–	2	–	–	2
		67171	SCREW—Supercharger drain valve ball retainer.....	–	–	–	–	1	–	1	–	–	1
		63669	RING—Supercharger drain valve housing packing.....	–	–	–	–	1	–	1	–	–	1
		@ 410726	TUBE ASSEMBLY—Supercharger drain valve return.....	–	–	–	–	1	–	1	–	–	1
			Factory installed on all -65 and -73 engines and on the following engines: *-97* (47467, 69425 to 73154, 80787 to 81234, 81236 to 82306 and 190066 to 190149)										
			Superseded by 421053.										
4	1332	421053	TUBE ASSEMBLY—Supercharger drain valve return.....	–	–	–	–	1	–	1	–	–	1
			Factory installed on the following engines: *-97* (190150 to 190522)										
		* 67174	TUBE—Supercharger drain valve return.....	–	–	–	–	1	–	1	–	–	1
			Part of assembly 410726.										

Fig. No.	Index Number	Part Number	Nomenclature 1 2 3 4 5 6 7	Units Per Assy—Model R1820 - -40	-40B	-54	-60	-65	-71	-73	-87	-95	-97
		* 120931	TUBE—Supercharger drain valve return..... *Part of assembly 421053.*	–	–	–	–	1	–	1	–	–	1
		* 67239	FITTING—Supercharger drain valve return tube..... *Part of assembly 410726.*	–	–	–	–	1	–	1	–	–	1
		* 120930	FITTING—Supercharger drain valve return tube..... *Part of assembly 421053.*	–	–	–	–	1	–	1	–	–	1
		* 29124	NIPPLE—Supercharger drain valve return tube	–	–	–	–	1	–	1	–	–	1
			SUPERCHARGER REAR COVER										
		@ 413551	COVER STUDDING ASSEMBLY—Supercharger rear.....	1	–	–	–	1	–	–	–	1	–

Factory installed on the following engines:
-40 (31651 to 31668 and 31676 to 31709)
-65 (29898 to 29997, 30030 to 30045, 41102 to 41122 and 41124 to 41133)
-95 (31732, 31733, 31741 to 31748 and 31750 to 31752)

413551 does not include two studs adjacent to the starter pad for attaching an external hydro-oil line. It does not include a bushing nor an annulus in the oil filter bore but does include three studs for attaching the clutch control valve housing or substituting cover.

For replacement on engines having a two-speed impeller drive, make the following substitutions:

Use	Description	Remove	Quant.
421567	*Cover Studding Assembly — Supercharger rear*	*413551*	*1*
116964	*Ring — Oil filter packing*		*1*
130D46	*Flange — External hydro-oil supply tube substituting cover*		*1*
129D64	*Gasket — External hydro-oil supply tube substituting cover flange*		*1*
4040D5	*Nut—External hydro-oil supply tube substituting cover flange to supercharger rear cover*		*2*

For replacement on engines having a single-speed impeller drive, make the following substitutions:

Use	Description	Remove	Quant.
421568	*Cover Studding Assembly — Supercharger rear*	*413551*	*1*
116964	*Ring—Oil filter packing*		
130D46	*Flange — External hydro-oil supply tube substituting cover*		*1*
129D64	*Gasket — External hydro-oil supply tube substituting cover flange*		*1*
4040D5	*Nut — External hydro-oil supply tube substituting cover flange to supercharger rear cover*		*2*

AVIATIONGS
WWW.AVIATIONGS.COM

Fig. No.	Index Number	Part Number	Nomenclature 1 2 3 4 5 6 7	Units Per Assy—Model R1820 -40	-40B	-54	-60	-65	-71	-73	-87	-95	-97
	@	415844	COVER STUDDING ASSEMBLY—Supercharger rear	1	–	–	–	1	–	1	1	1	1

Factory installed on all -73 engines and on the following engines:

-40 (31669 to 31674, 31710 to 31722, 45777 to 45876, 45879 to 45928 and 152818 to 152820)

-65 (29347, 30018 to 30029, 30046 to 30050, 41136 to 41267, 44242 to 44295, 44311 to 45387, 45394 to 45399, 45401 to 45474, 45939 to 47072 and 47123 to 47400)

-87 (73155 to 73171, 73280 to 73303, 86997 to 87005, 87546 to 87559 and 93880 to 93885)

-95 (31805, 31812, 31814, 31818 and 31823)

-97 (69425 to 70546, 70563 to 70624 and 70865 to 70902)

415844 does not include two studs adjacent to the starter pad for attaching an external hydro-oil line. It includes a bushing but not an annulus in the oil filter bore and has three studs for attaching the clutch control valve housing or substituting cover.

For replacement on engines having a two-speed impeller drive, make the following substitutions:

Use	Description	Remove	Quant.
421567	*Cover Studding Assembly — Supercharger rear*	*415844*	*1*
116964	*Ring—Oil filter packing*		*1*
130D46	*Flange — External hydro-oil supply tube substituting cover*		*1*
129D64	*Gasket — External hydro-oil supply tube substituting cover flange*		*1*
4040D5	*Nut—External hydro-oil supply tube substituting cover flange to supercharger rear cover*		*2*

For replacement on engines having a single-speed impeller drive, make the following substitutions:

Use	Description	Remove	Quant.
421568	*Cover Studding Assembly — Supercharger rear*	*415844*	*1*
116964	*Ring—Oil filter packing*		*1*
130D46	*Flange — External hydro-oil supply tube substituting cover*		*1*
129D64	*Gasket — External hydro-oil supply tube substituting cover flange*		*1*
4040D5	*Nut—External hydro-oil supply tube substituting cover flange to supercharger rear cover*		*2*

AVIALOGS
WWW.AVIALOGS.COM

Fig. No.	Index Number	Part Number	Nomenclature 1 2 3 4 5 6 7	Units Per Assy—Model R1820 -40	-40B	-54	-60	-65	-71	-73	-87	-95	-97
		@ 415485	COVER STUDDING ASSEMBLY—Supercharger rear	1	1	–	1	1	1	–	1	–	1

Factory installed on all -40B engines and on the following engines:

-40 (45932 to 45934, 94528 to 94552, 152790 to 152799 and 152854 to 152913)

-60 (73229 to 73279, 73304 to 73362, 88168 to 88196, 155763 to 155788 and 156289 to 156345)

-65 (47073 to 47122 and 47401 to 47456)

-71 (41442, 41443, 41469 to 41486, 41510 to 41514, 45545 to 45549, 45560, 152629 to 152787, 152802 to 152805, 152810 to 152817, 152824 to 152839, 152842 to 152853 and 152944 to 152975)

-87 (47457 to 47466, 73172 to 73228, 79867 to 80136, 80302 to 80360, 87006 to 87532, 87560 to 87643, 87658 to 87762, 87779 to 87857, 93886 to 94207, 152821 to 152823 and 153086 to 153105)

-97 (70547 to 70562, 70625 to 70864, 70903 to 72946, 80787 to 81084 and 81105 to 81164)

415485 does not include two studs adjacent to the starter pad for attaching an external hydro-oil line. It does not include a bushing but does include an annulus in the oil filler bore for packing ring 116964 and three studs for attaching the clutch control valve housing or substituting cover.

For replacement on engines having a two-speed impeller drive, make the following substitutions:

Use	Description	Remove	Quant.
421567	*Cover Studding Assembly — Supercharger rear*	*415485*	1
130D46	*Flange — External hydro-oil supply tube substituting cover*		*1*
129D64	*Gasket — External hydro-oil supply tube substituting cover flange*		*1*
4040D5	*Nut—External hydro-oil supply tube substituting cover flange to supercharger rear cover*		2

For replacement on engines having a single-speed impeller drive, make the following substitutions:

Use	Description	Remove	Quant.
421568	*Cover Studding Assembly — Supercharger rear*	*415485*	*1*
130D46	*Flange — External hydro-oil supply tube substituting cover*		*1*
129D64	*Gasket — External hydro-oil supply tube substituting cover flange*		*1*
4040D5	*Nut—External hydro-oil supply tube substituting cover to supercharger rear cover*		*2*

AVIALOGS
WWW.AVIALOGS.COM

Fig. No.	Index Number	Part Number	Nomenclature 1 2 3 4 5 6 7	Units Per Assy—Model R1820 -40	-40B	-54	-60	-65	-71	-73	-87	-95	-97
		@ 420161	COVER STUDDING ASSEMBLY—Supercharger rear	1	–	1	1	–	1	–	1	–	1
			Factory installed on the following engines: *-40* (94553 to 94567 and 152914 to 152943) *-54* (86727 to 86793) *-60* (47468, 47469, 73363 to 73429, 73432 to 73790, 155789 to 155817, 155824 to 155879, 156346 to 158093, 183147 to 183464, 425321 to 425542, 425573 to 425885 and 426451 to 426720) *-71* (152976 to 153065) *-87* (87644 to 87657, 87763 to 87778, 88098 to 88167, 94208 to 94527, 94568 to 94577, 152491 to 152555, 153106 to 153210, 183060 to 183146 and 189949 to 190005) *-97* (47467, 72947 to 73154, 81085 to 81104, 81165 to 81234, 81236 to 82306 and 190066 to 190522)										
			420161 includes two drilled studs adjacent to the starter pad for attaching an external hydro-oil line. It does not include a bushing but does include an annulus in the oil filter bore for packing ring 116964 and three studs for attaching the clutch control valve housing or substituting cover.										
			For replacement on engines having a two-speed impeller drive, make the following substitutions:										
			Use — Description — Remove — Quant. *421567* — *Cover Studding Assembly — Supercharger rear* — *420161* — *1* *4040D5* — *Nut—External hydro-oil supply tube substituting cover flange to supercharger rear cover* — *2*										
			For replacement on engines having a single-speed impeller drive, make the following substitutions:										
			Use — Description — Remove — Quant. *421568* — *Cover Studding Assembly — Supercharger rear* — *420161* — *1* *4040D5* — *Nut—External hydro-oil supply tube substituting cover flange to supercharger rear cover* — *2*										
5	1360	421567	COVER STUDDING ASSEMBLY—Supercharger rear	1	1	1	1	–	–	–	1	1	–
			Factory installed on the following engines: *-54* (86794 to 86866, 429167 to 429376 and 452267 to 452378) *-60* (73791 to 73914, 80137 to 80279, 425543 to 425572, 425886 to 426450 and 454477 to 455407) *-87* (190006 to 190065)										
			421567 includes two plain studs adjacent to the starter pad for attaching an external hydro-oil line. It does not include a bushing but does include an annulus in the oil filter bore for packing ring 116964 and three studs for attaching the clutch control valve housing.										
		421568	COVER STUDDING ASSEMBLY—Supercharger rear	–	–	–	–	1	1	1	–	–	1
			Factory installed on the following engines: *-71* (153066 to 153085)										
			421568 includes two plain studs adjacent to the starter pad for attaching an external hydro-oil line. It does not include a bushing but does include an annulus in the oil filter bore for packing ring 116964. It does not have three studs for attaching a clutch control valve housing or substituting cover.										

AVIATION OGS
WWW.AVIATION-OGS.COM

Fig. No.	Index Number	Part Number	Nomenclature 1 2 3 4 5 6 7	Units Per Assy—Model R1820 -40 -40B -54 -60 -65 -71 -73 -87 -95 -97

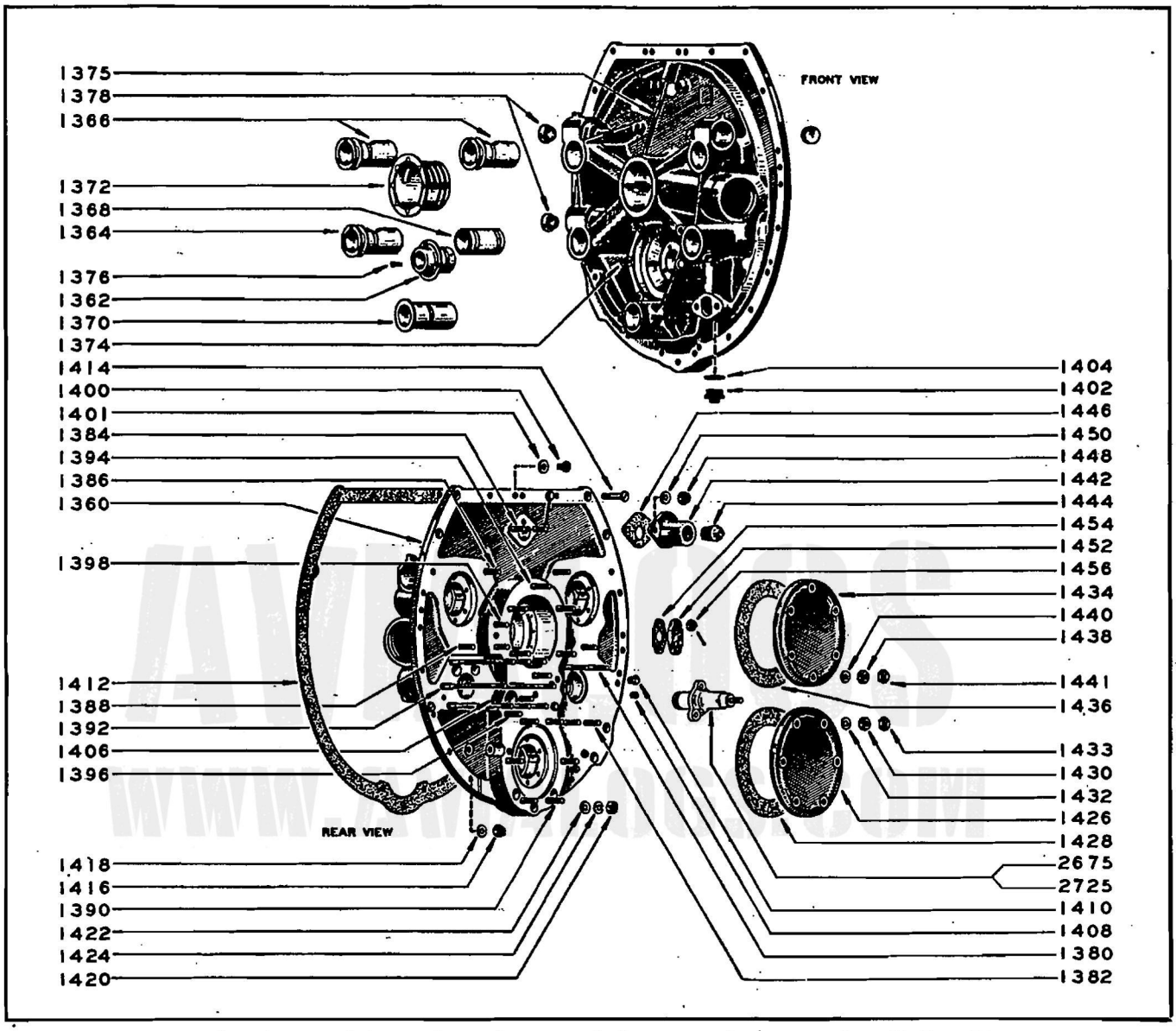

Numbers shown are index numbers and are numerically arranged in the Group Assembly Parts List

Figure 5—Supercharger Rear Cover (Front and Rear View)

* 412363	COVER MACHINING ASSEMBLY—Supercharger rear *Part of assembly 413551.*	1	–	–	–	1	–	–	–	1	–
* 415480	COVER MACHINING ASSEMBLY—Supercharger rear *Part of assembly 415485.*	1	1	–	1	1	1	–	1	–	1
* 415843	COVER MACHINING ASSEMBLY—Supercharger rear *Part of assembly 415844.*	1	–	–	–	1	–	1	1	1	1
* 420160	COVER MACHINING ASSEMBLY—Supercharger rear *Part of assemblies 420161 and 421567.*	1	1	1	1	–	1	–	1	–	1
* 420967	COVER MACHINING ASSEMBLY—Supercharger rear *Part of assembly 421568.*	–	–	–	–	1	1	1	–	–	1

Fig. No.	Index Number	Part Number	Nomenclature 1 2 3 4 5 6 7	Units Per Assy—Model R1820 -40	-40B	-54	-60	-65	-71	-73	-87	-95	-97
5	1362	411227	BUSHING ASSEMBLY—Impeller drive gear and pinion or intermediate impeller drive shaft, rear..... *Part of assemblies 412363, 415480, 415843 and 420160.*	1	1	1	1	1	1	1	1	1	1
		* 67804	BUSHING—Impeller drive gear and pinion or intermediate impeller drive shaft, rear.....	1	1	1	1	1	1	1	1	1	1
		* 17D26	PIN—Impeller drive gear and pinion or intermediate impeller drive shaft rear bushing oil line.....	3	3	3	3	3	3	3	3	3	3
		120728	BUSHING—Intermediate impeller drive shaft, rear..... *Part of assembly 420967.*	–	–	–	–	1	1	1	–	–	1
		* 69170	COVER—Supercharger rear..... *Part of assembly 412363.*	1	–	–	–	1	–	–	–	1	–
		* 113513	COVER—Supercharger rear..... *Part of assembly 415843.*	1	–	–	–	1	–	1	1	1	1
		* 113665	COVER—Supercharger rear..... *Part of assembly 415480.*	1	1	–	1	1	1	–	1	–	1
		* 118257	COVER—Supercharger rear..... *Part of assembly 420160.*	1	1	1	1	–	1	–	1	–	1
		* 120733	COVER—Supercharger rear..... *Part of assembly 420967*	–	–	–	–	1	1	1	–	–	1
5	1364	66724	BUSHING—Fuel pump and dual accessory drive gear shaft, standard size	1	1	1	1	1	1	1	1	1	1
		66724Y2	BUSHING—Same as 66724 except .010 in. OS OD.....	AR	AR	AR	AR	AR	AR	AR	AR	AR	AR
5	1366	69430	BUSHING—Magneto and gun synchronizer impulse generator drive shaft, standard size.....	2	2	2	2	2	2	2	2	2	2
		69430Y2	BUSHING—Same as 69430 except .010 in. OS OD.....	AR	AR	AR	AR	AR	AR	AR	AR	AR	AR
5	1368	25937	BUSHING—Oil pump drive gear, standard size.....	1	1	1	1	1	1	1	1	1	1
		25937Y10	BUSHING—Same as 25937 except .010 in. OS OD.....	AR	AR	AR	AR	AR	AR	AR	AR	AR	AR
5	1370	69500	BUSHING—Generator drive gear, standard size.....	1	1	1	1	1	1	1	1	1	1
		69500Y2	BUSHING—Same as 69500 except .010 in. OS OD.....	AR	AR	AR	AR	AR	AR	AR	AR	AR	AR
		* 29D20	PIN—Supercharger rear cover generator drive gear bushing oil line, plugging	1	1	1	1	1	1	1	1	1	1
5	1372	66375	BUSHING—Accessory drive and starter shaft, standard size.....	1	1	1	1	1	1	1	1	1	1
		66375Y1	BUSHING—Same as 66375 except .005 in. OS OD, standard flange.....	AR	AR	AR	AR	AR	AR	AR	AR	AR	AR
		66375Y2	BUSHING—Same as 66375 except .010 in. OS OD, standard flange.....	AR	AR	AR	AR	AR	AR	AR	AR	AR	AR
		66375Y3	BUSHING—Same as 66375 except .030 in. OS OD, standard flange.....	AR	AR	AR	AR	AR	AR	AR	AR	AR	AR
		66375Y10	BUSHING—Same as 66375 except standard OD, .030 in. OS flange.....	AR	AR	AR	AR	AR	AR	AR	AR	AR	AR
		66375Y11	BUSHING—Same as 66375 except .005 in. OS OD, .030 in. OS flange.....	AR	AR	AR	AR	AR	AR	AR	AR	AR	AR
		66375Y12	BUSHING—Same as 66375 except .010 in. OS OD, .030 in. OS flange.....	AR	AR	AR	AR	AR	AR	AR	AR	AR	AR
		66375Y13	BUSHING—Same as 66375 except .030 in. OS OD, .030 in. OS flange.....	AR	AR	AR	AR	AR	AR	AR	AR	AR	AR
		113326	BUSHING—Oil filter..... *Part of assembly 415843.*	1	–	–	–	1	–	1	1	1	1
		13D59	PIN—Oil filter bushing retaining..... *Part of assembly 415843.*	1	–	–	–	1	–	1	1	1	1
5	1374	¢ 2028D8	STUD—Supercharger rear cover to impeller drive multi-plate clutch housing, standard size..... *Part of assemblies 412363, 415480, 415843 and 420160.*	6	6	6	6	6	6	6	6	6	6
		2028H8	STUD—Same as 2028D8 except .003 in. OS OD.....	AR	AR	AR	AR	AR	AR	AR	AR	AR	AR

Fig. No.	Index Number	Part Number	Nomenclature 1 2 3 4 5 6 7	Units Per Assy—Model R1820 -40	-40B	-54	-60	-65	-71	-73	-87	-95	-97
		2028S8	STUD—Same as 2028D8 except .007 in. OS OD	AR	AR	AR	AR	AR	AR	AR	AR	AR	AR
		2028J8	STUD—Same as 2028D8 except .012 in. OS OD	AR	AR	AR	AR	AR	AR	AR	AR	AR	AR
5	1375	66372	TUBE—Supercharger rear cover oil pressure	1	1	1	1	1	1	1	1	1	1
5	1376	56D6	SCREW—Impeller drive gear and pinion or intermediate impeller drive shaft rear bushing to supercharger rear cover	3	3	3	3	3	3	3	3	3	3
5	1378	28957	BUTTON—Fuel pump and gun synchronizer impulse generator drive shaft thrust	3	3	3	3	3	3	3	3	3	3
5	1380	¢ 2029D18	STUD—Supercharger rear cover to dual accessory drive housing, long, standard size	2	2	2	2	2	2	2	2	2	2
		2029H18	STUD—Same as 2029D18 except .003 in. OS OD	AR	AR	AR	AR	AR	AR	AR	AR	AR	AR
		2029S18	STUD—Same as 2029D18 except .007 in. OS OD	AR	AR	AR	AR	AR	AR	AR	AR	AR	AR
		2029J18	STUD—Same as 2029D18 except .012 in. OS OD	AR	AR	AR	AR	AR	AR	AR	AR	AR	AR
5	1382	¢ 2030D9	STUD—Supercharger rear cover to dual accessory drive housing, short, standard size	2	2	2	2	2	2	2	2	2	2
		2030H9	STUD—Same as 2030D9 except .003 in. OS OD	AR	AR	AR	AR	AR	AR	AR	AR	AR	AR
		2030S9	STUD—Same as 2030D9 except .007 in. OS OD	AR	AR	AR	AR	AR	AR	AR	AR	AR	AR
		2030J9	STUD—Same as 2030D9 except .012 in. OS OD	AR	AR	AR	AR	AR	AR	AR	AR	AR	AR
5	1384	¢ 2030D9	STUD—Supercharger rear cover to oil tank vent flange	2	2	2	2	2	2	2	2	2	2
		2030H9	STUD—Same as 2030D9 except .003 in. OS OD	AR	AR	AR	AR	AR	AR	AR	AR	AR	AR
		2030S9	STUD—Same as 2030D9 except .007 in. OS OD	AR	AR	AR	AR	AR	AR	AR	AR	AR	AR
		2030J9	STUD—Same as 2030D9 except .012 in. OS OD	AR	AR	AR	AR	AR	AR	AR	AR	AR	AR
5	1386	¢ 2135D90	STUD—Supercharger rear cover to magneto (1.65 in. long), standard size	#	#	#	#	#	#	#	#	#	#
			2135D90 supersedes and is supplied for replacement of 126D138 (1.46 in. long) used at this location on some engines.										
			Quantities used: *With assembly 413551—four units* *With assembly 415485—four units* *With assembly 415844—four units* *With assembly 420161—three units* *With assembly 421567—three units* *With assembly 421568—three units*										
		2135H90	STUD—Same as 2135D90 except .003 in. OS OD	AR	AR	AR	AR	AR	AR	AR	AR	AR	AR
		2135S90	STUD—Same as 2135D90 except .007 in. OS OD	AR	AR	AR	AR	AR	AR	AR	AR	AR	AR
		2135J90	STUD—Same as 2135D90 except .012 in. OS OD	AR	AR	AR	AR	AR	AR	AR	AR	AR	AR
5	1388	¢ 2146D95	STUD—Supercharger rear cover to magneto (1.50 in. long), standard size	1	1	1	1	1	1	1	1	1	1
			Part of assemblies 420161, 421567 and 421568.										
		2146H95	STUD—Same as 2146D95 except .003 in. OS OD	AR	AR	AR	AR	AR	AR	AR	AR	AR	AR
		2146S95	STUD—Same as 2146D95 except .007 in. OS OD	AR	AR	AR	AR	AR	AR	AR	AR	AR	AR
		2146J95	STUD—Same as 2146D95 except .012 in. OS OD	AR	AR	AR	AR	AR	AR	AR	AR	AR	AR
5	1390	¢ 2032D10	STUD—Supercharger rear cover to generator or substituting cover, standard size	6	6	6	6	6	6	6	6	6	6
		2032H10	STUD—Same as 2032D10 except .003 in. OS OD	AR	AR	AR	AR	AR	AR	AR	AR	AR	AR
		2032S10	STUD—Same as 2032D10 except .007 in. OS OD	AR	AR	AR	AR	AR	AR	AR	AR	AR	AR
		2032J10	STUD—Same as 2032D10 except .012 in. OS OD	AR	AR	AR	AR	AR	AR	AR	AR	AR	AR
		¢ 2043D69	STUD—Supercharger rear cover to oil pump (5.28 in. long), standard size	8	8	8	8	8	8	8	8	8	8
			Part of assemblies 413551, 415485, 415844 and 420161.										

AVIATION PUBS
WWW.AVIATIONPUBS.COM

Fig. No.	Index Number	Part Number	Nomenclature 1 2 3 4 5 6 7	Units Per Assy—Model R1820 -40	-40B	-54	-60	-65	-71	-73	-87	-95	-97
		2043H69	STUD—Same as 2043D69 except .003 in. OS OD	AR	AR	AR	AR	AR	AR	AR	AR	AR	AR
		2043S69	STUD—Same as 2043D69 except .007 in. OS OD	AR	AR	AR	AR	AR	AR	AR	AR	AR	AR
		2043J69	STUD—Same as 2043D69 except .012 in. OS OD	AR	AR	AR	AR	AR	AR	AR	AR	AR	AR
5	1392	¢ 2043D73	STUD—Supercharger rear cover to oil pump (5.22 in. long), standard size. *Part of assemblies 421567 and 421568.*	8	8	8	8	8	8	8	8	8	8
		2043H73	STUD—Same as 2043D73 except .003 in. OS OD	AR	AR	AR	AR	AR	AR	AR	AR	AR	AR
		2043S73	STUD—Same as 2043D73 except .007 in. OS OD	AR	AR	AR	AR	AR	AR	AR	AR	AR	AR
		2043J73	STUD—Same as 2043D73 except .012 in. OS OD	AR	AR	AR	AR	AR	AR	AR	AR	AR	AR
5	1394	¢ 2032D10	STUD—Supercharger rear cover to starter or substituting cover, standard size	6	6	6	6	6	6	6	6	6	6
		2032H10	STUD—Same as 2032D10 except .003 in. OS OD	AR	AR	AR	AR	AR	AR	AR	AR	AR	AR
		2032S10	STUD—Same as 2032D10 except .007 in. OS OD	AR	AR	AR	AR	AR	AR	AR	AR	AR	AR
		2032J10	STUD—Same as 2032D10 except .012 in. OS OD	AR	AR	AR	AR	AR	AR	AR	AR	AR	AR
5	1396	¢ 2029D17	STUD—Supercharger rear cover to clutch control valve housing or substituting cover, standard size. *Part of assemblies 413551, 415485, 415844, 420161 and 421567.*	3	3	3	3	3	3	3	3	3	3
		2029H17	STUD—Same as 2029D17 except .003 in. OS OD	AR	AR	AR	AR	AR	AR	AR	AR	AR	AR
		2029S17	STUD—Same as 2029D17 except .007 in. OS OD	AR	AR	AR	AR	AR	AR	AR	AR	AR	AR
		2029J17	STUD—Same as 2029D17 except .012 in. OS OD	AR	AR	AR	AR	AR	AR	AR	AR	AR	AR
		¢ 2135D75	STUD—Supercharger rear cover to external hydro-oil supply tube flange or substituting flange (drilled), standard size. *Part of assembly 420161.*	2	–	2	2	–	2	–	2	–	2
		2135H75	STUD—Same as 2135D75 except .003 in. OS OD	AR	–	AR	AR	–	AR	–	AR	–	AR
		2135S75	STUD—Same as 2135D75 except .007 in. OS OD	AR	–	AR	AR	–	AR	–	AR	–	AR
		2135J75	STUD—Same as 2135D75 except .012 in. OS OD	AR	–	AR	AR	–	AR	–	AR	–	AR
5	1398	¢ 2134D85	STUD—Supercharger rear cover to external hydro-oil supply tube flange or substituting flange (plain), standard size. *Part of assemblies 421567 and 421568.*	2	2	2	2	2	2	2	2	2	2
		2134H85	STUD—Same as 2134D85 except .003 in. OS OD	AR	AR	AR	AR	AR	AR	AR	AR	AR	AR
		2134S85	STUD—Same as 2134D85 except .007 in. OS OD	AR	AR	AR	AR	AR	AR	AR	AR	AR	AR
		2134J85	STUD—Same as 2134D85 except .012 in. OS OD	AR	AR	AR	AR	AR	AR	AR	AR	AR	AR
5	1400	2070D1	SCREW—Supercharger rear cover puller substituting	2	2	2	2	2	2	2	2	2	2
5	1401	AN900-5	GASKET—Supercharger rear cover puller substituting screw (Wright Part No. 23D17)	2	2	2	2	2	2	2	2	2	2
5	1402	2072D7	PLUG—Supercharger rear cover (at oil suction section)	1	1	1	1	1	1	1	1	1	1
5	1404	AN900-14	GASKET—Supercharger rear cover plug (at oil suction section) (Wright Part No. 23D1)	1	1	1	1	1	1	1	1	1	1
5	1406	102D33	PLUG—Supercharger rear cover, pipe (.250 in. headless). *Quantities used: With assembly 421568—four units; with all others—six units.*	#	#	#	#	#	#	#	#	#	#
5	1408	2142D1	PLUG—Supercharger rear cover, pipe (.125 in. headless). *Quantities used: With assembly 421568—one unit; with all others—two units.*	#	#	#	#	#	#	#	#	#	#

Fig. No.	Index Number	Part Number	Nomenclature 1 2 3 4 5 6 7	Units Per Assy—Model R1820 -40	-40B	-54	-60	-65	-71	-73	-87	-95	-97
5	1410	4042D1	PLUG—Supercharger rear cover, pipe (.125 in. hex head)..... *Quantities used: With assembly 421568—eight units With assembly 413551—nine units With assembly 415485—nine units With assembly 415844—nine units With assembly 420161—ten units With assembly 421567—ten units.*	#	#	#	#	#	#	#	#	#	#
		163D64	FITTING—Supercharger rear cover manifold pressure gage connection..... *Used on some early engines. Plug 4042D1 used at this location on late engines.*	1	1	1	1	1	1	1	1	1	1
5	1412	07795	GASKET—Supercharger rear cover to supercharger rear housing.....	1	1	1	1	1	1	1	1	1	1
5	1414	2070D11	BOLT—Supercharger rear cover to supercharger rear housing.....	4	4	4	4	4	4	4	4	4	4
5	1416	4040D5	NUT—Supercharger rear cover to supercharger rear housing bolt and stud..... *Supersedes and supplied for replacement of nut 2D4 and palnut 356-524 used on some early engines at this location.*	14	14	14	14	14	14	14	14	14	14
		1D4	NUT—Supercharger rear cover to supercharger rear housing stud (slotted hex).....	1	1	1	1	1	1	1	1	1	1
5	1418	34D33	WASHER—Supercharger rear cover to supercharger rear housing bolt and stud (.063 in. thick).....	14	14	14	14	14	14	14	14	14	14
		27D5	WASHER—Supercharger rear cover to supercharger rear housing stud (.031 in. thick)....	1	1	1	1	1	1	1	1	1	1
		57D1	COTTER PIN—Supercharger rear cover to supercharger rear housing stud nut.....	1	1	1	1	1	1	1	1	1	1
		@ 66677	NUT—Supercharger rear cover to supercharger rear housing (under generator) (early type)..... *Superseded by 1D5.*	3	3	3	3	3	3	3	3	3	3
5	1420	1D5	NUT—Supercharger rear cover to supercharger rear housing (under generator) (late type).....	3	3	3	3	3	3	3	3	3	3
5	1422	27D118	WASHER—Supercharger rear cover to supercharger rear housing (under generator).....	3	3	3	3	3	3	3	3	3	3
5	1424	28D12	LOCKWASHER—Supercharger rear cover to supercharger rear housing (under generator)	3	3	3	3	3	3	3	3	3	3
		@ 23328	COVER—Generator substituting (early type)..... *Superseded by 23328N3.*	1	1	1	1	1	1	1	1	1	1
5	1426	23328N3	COVER—Generator substituting (late type).....	1	1	1	1	1	1	1	1	1	1
5	1428	67410	GASKET—Generator or substituting cover.....	1	1	1	1	1	1	1	1	1	1
5	1430	2D7	NUT—Generator or substituting cover to supercharger rear cover.....	6	6	6	6	6	6	6	6	6	6
5	1432	34D14	WASHER—Generator or substituting cover to supercharger rear cover.....	6	6	6	6	6	6	6	6	6	6
5	1433	356-624	PALNUT—Generator or substituting cover to supercharger rear cover nut (Wright Part No. 2000D3).....	6	6	6	6	6	6	6	6	6	6
		@ 23328	COVER—Starter substituting (early type)..... *Superseded by 23328N3.*	1	1	1	1	1	1	1	1	1	1
5	1434	23328N3	COVER—Starter substituting (late type).....	1	1	1	1	1	1	1	1	1	1
5	1436	14981	GASKET—Starter or substituting cover.....	1	1	1	1	1	1	1	1	1	1
5	1438	2D7	NUT—Starter or substituting cover to supercharger rear cover.....	6	6	6	6	6	6	6	6	6	6

AVIATIONGS
WWW.AVIATIONGS.COM

Fig. No.	Index Number	Part Number	Nomenclature 1 2 3 4 5 6 7	Units Per Assy—Model R1820 -40	-40B	-54	-60	-65	-71	-73	-87	-95	-97
5	1440	34D14	WASHER—Starter or substituting cover to supercharger rear cover	6	6	6	6	6	6	6	6	6	6
5	1441	3566-24	PALNUT—Starter or substituting cover to supercharger rear cover nut (Wright Part No. 2000D3)	6	6	6	6	6	6	6	6	6	6
		@ 64602	FLANGE—Oil tank vent (early type) *Superseded by 64602N2.*	1	1	1	1	1	1	1	1	1	1
5	1442	64602N2	FLANGE—Oil tank vent (late type)	1	1	1	1	1	1	1	1	1	1
5	1444	AN913-6	PLUG—Oil tank vent flange (Wright Part No. 2105D5)	1	1	1	1	1	1	1	1	1	1
5	1446	64603	GASKET—Oil tank vent flange	1	1	1	1	1	1	1	1	1	1
5	1448	4040D5	NUT—Oil tank vent flange to supercharger rear cover	2	2	2	2	2	2	2	2	2	2
5	1450	34D33	WASHER—Oil tank vent flange to supercharger rear cover	2	2	2	2	2	2	2	2	2	2
5	1452	130D46	FLANGE—External hydro-oil supply tube substituting cover *Used with supercharger rear covers 420161, 421567 and 421568 when an external hydro-oil tube is not mounted on the rear cover.*	1	1	1	1	1	1	1	1	1	1
		@ 129D88	GASKET—External hydro-oil supply tube substituting cover flange (early type) *Superseded by 129D64.*	1	1	1	1	1	1	1	1	1	1
5	1454	129D64	GASKET—External hydro-oil supply tube substituting cover flange (late type) *Used with flange 130D46.*	1	1	1	1	1	1	1	1	1	1
		2101D4	NUT—External hydro-oil supply tube substituting cover flange to supercharger rear cover *Used with flange 130D46 on engines having a drilled stud at this location.*	2	2	2	2	2	2	2	2	2	2
5	1456	4040D5	NUT—External hydro-oil supply tube substituting cover flange to supercharger rear cover *Used with flange 130D46 on engines having a plain stud at this location.*	2	2	2	2	2	2	2	2	2	2
		57D1	COTTER PIN—External hydro-oil supply tube substituting cover flange to supercharger rear cover nut *Used with nut 2101D4.*	2	2	2	2	2	2	2	2	2	2
		@ 66681	COVER—Supercharger clutch oil control valve substituting (early type) *Used on single-speed engines having a rear cover with provision for an oil control valve. Superseded by 66681N2.*	–	–	–	–	1	1	1	–	–	1
		66681N2	COVER—Supercharger clutch oil control valve substituting (late type) *Used on single-speed engines having a rear cover with provision for an oil control valve.*	–	–	–	–	1	1	1	–	–	1
		66386	GASKET—Supercharger clutch oil control valve substituting cover *Used with cover 66681 or 66681N2.*	–	–	–	–	1	1	1	–	–	1
		4040D5	NUT—Supercharger clutch oil control valve substituting cover to supercharger rear cover *Used with cover 66681 or 66681N2.*	–	–	–	–	3	3	3	–	–	3
		34D33	WASHER—Supercharger clutch oil control valve substituting cover to supercharger rear cover *Used with cover 66681 or 66681N2.*	–	–	–	–	3	3	3	–	–	3

AVIATION BUFFS
WWW.AVIATIONBUFFS.COM

Fig. No.	Index Number	Part Number	Nomenclature 1 2 3 4 5 6 7	Units Per Assy—Model R1820 -40 -40B -54 -60 -65 -71 -73 -87 -95 -97

EXTERNAL HYDRO-OIL SUPPLY TUBES (SUPERCHARGER REAR HOUSING TO CRANKCASE FRONT SECTION)

Parts listed in this group are used for the following engines:
-97 (*69425 to 70802, 70803 to 70809, *70810 to 70816, 70817 to 70864, *70865 to 71301, 71302 to 71386, *71387 to 71393, 71394, *71395 to 71410, 71411, *71412, *71413, 71414, *71415 to 71418, 71419, *71420 to 71449, 71450, *71451 to 71455, 71456, *71457 to 71461, 71462, *71463 to 71465, 71466, *71467, *71468, 71469 to 71473, *71474, 71475, *71476, 71477, *71478, 71479 to 73154, 80787 to 81081, 81105 to 81234, 81236 to 81711 and 81798 to 81977)

**The oil tubes for these engines were installed in the field by various aircraft manufacturers and differ from the type installed by the Wright Aeronautical Corporation. In some cases only the fittings are different; while in others, different tubes, connections and attaching parts have been used. As a record of the parts comprising these oil tubes is not available, it is recommended that when replacement of parts for any of the oil tubes on these engines becomes necessary, that assembly part number 890147 be used. Part number 890147 includes all the parts for the complete oil line as installed at the factory by the Wright Aeronautical Corporation.*

		890147	TUBES ASSEMBLY COMPLETE—External hydro-oil supply	–	–	–	–	–	–	–	–	–	1
			This assembly includes all the parts required to install the external hydro-oil line which leads from the left gun synchronizer impulse generator location to the low pressure governor oil supply passage in the crankcase front section.										
6	1475	420105	TUBE ASSEMBLY—External hydro-oil supply, front	–	–	–	–	–	–	–	–	–	1
		* 118134	TUBE—External hydro-oil supply, front	–	–	–	–	–	–	–	–	–	1
		* 156D11	NUT—External hydro-oil supply fron tube	–	–	–	–	–	–	–	–	–	2
		* 157D8	CONE—External hydro-oil supply front tube	–	–	–	–	–	–	–	–	–	2
6	1477	420106	TUBE ASSEMBLY—External hydro-oil supply, rear	–	–	–	–	–	–	–	–	–	1
		* 118135	TUBE—External hydro-oil supply, rear	–	–	–	–	–	–	–	–	–	1
		* 156D11	NUT—External hydro-oil supply rear tube	–	–	–	–	–	–	–	–	–	1
		* 169D11	COUPLING—External hydro-oil supply rear tube	–	–	–	–	–	–	–	–	–	1
		* 157D8	CONE—External hydro-oil supply rear tube	–	–	–	–	–	–	–	–	–	1
6	1479	163D87	FITTING—External hydro-oil supply front tube	–	–	–	–	–	–	–	–	–	1
6	1481	159D17	ELBOW—External hydro-oil supply front tube (90 degrees)	–	–	–	–	–	–	–	–	–	1
6	1483	2174D1	CLAMP—External hydro-oil supply tube, front	–	–	–	–	–	–	–	–	–	1
6	1485	118180	BRACKET—Push rod housing clamp	–	–	–	–	–	–	–	–	–	1
6	1487	2174D2	CLAMP—Push rod housing	–	–	–	–	–	–	–	–	–	1
6	1489	AN520-10-10	SCREW—External hydro-oil supply tube to push rod housing clamp bracket (No. 10 -32 U.S.F. x .625 in.)(Wright Part No. 123D5)	–	–	–	–	–	–	–	–	–	1
6	1491	2087D2	NUT—External hydro-oil supply tube to push rod housing clamp bracket (No. 10-32 U.S.F.)	–	–	–	–	–	–	–	–	–	1

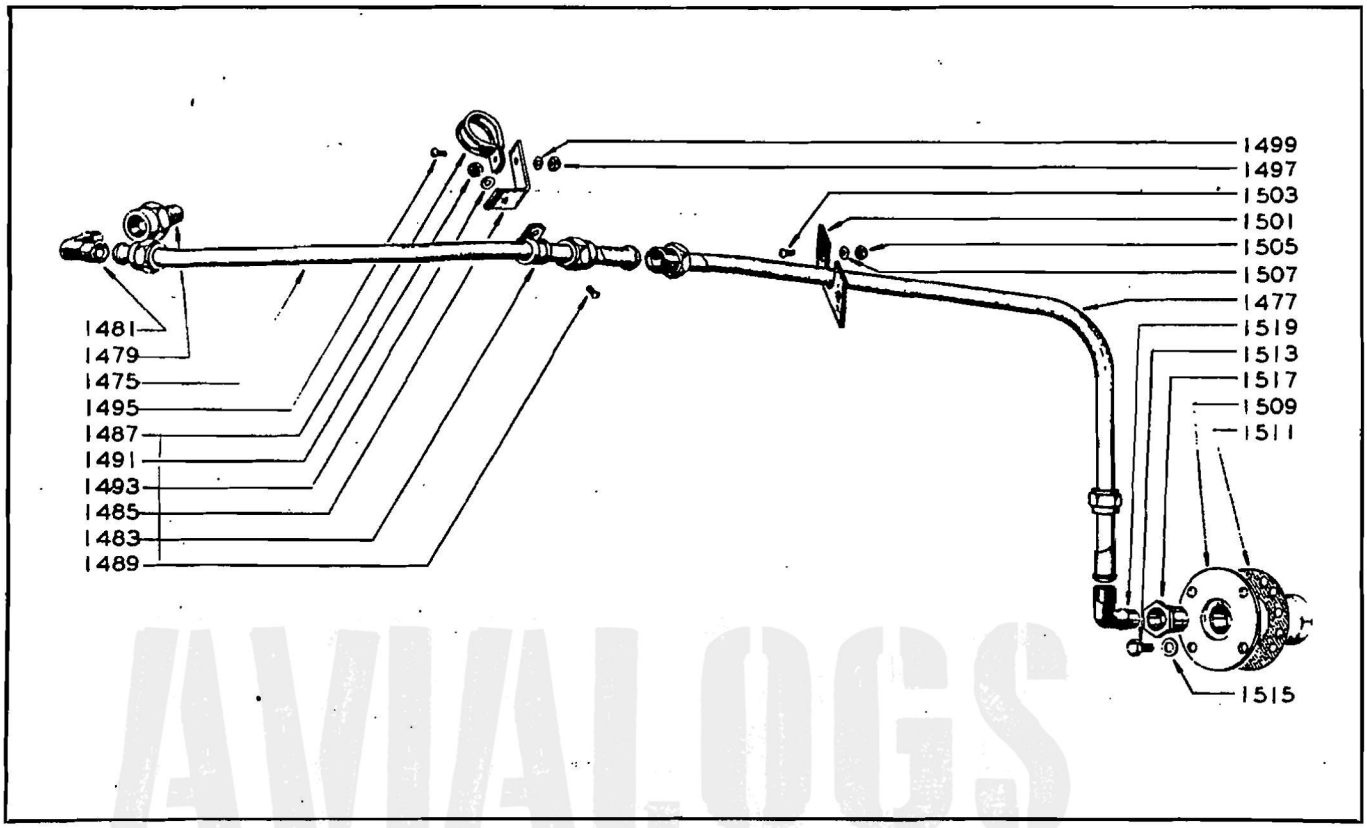

Numbers shown are index numbers and are numerically arranged in the Group Assembly Parts List

Figure 6—External Hydro-Oil Tubes (Supercharger Rear Housing to Crankcase Front Section)

Fig. No.	Index Number	Part Number	Nomenclature 1 2 3 4 5 6 7	Units Per Assy—Model R1820 -40 -40B -54 -60 -65 -71 -73 -87 -95 -97
6	1493	27D30	WASHER—External hydro-oil supply tube to push rod housing clamp bracket (.203 in. x .313 in. x .031 in.)	- - - - - - - - - 1
6	1495	AN520-10-10	SCREW—Push rod housing clamp bracket to clamp (No. 10-32 U.S.F. x .625 in.) (Wright Part No. 123D5)	- - - - - - - - - 1
6	1497	2087D2	NUT—Push rod housing clamp bracket to clamp (No. 10-32 U.S.F.)	- - - - - - - - - 1
6	1499	27D30	WASHER—Push rod housing clamp bracket to clamp (.203 in. x .313 in. x .031 in.)	- - - - - - - - - 1
6	1501	118183	PAD—External hydro-oil supply tube supporting	- - - - - - - - - 2
6	1503	AN520-10-10	SCREW—External hydro-oil supply tube supporting pad to deflector (No. 10-32 U.S.F. x .625 in.) (Wright Part No. 123D5)	- - - - - - - - - 2
6	1505	2087D2	NUT—External hydro-oil supply tube supporting pad to deflector (No. 10-32 U.S.F.)	- - - - - - - - - 2
6	1507	27D30	WASHER—External hydro-oil supply tube supporting pad to deflector (.203 in. x .313 in. x .031 in.)	- - - - - - - - - 2
6	1509	118074	ADAPTER—External hydro-oil supply tube (at supercharger rear housing)	- - - - - - - - - 1
6	1511	27471	GASKET—External hydro-oil supply tube adapter (at supercharger rear housing)	- - - - - - - - - 1
6	1513	22D3	SCREW—External hydro-oil supply tube adapter to supercharger rear housing (.250 in.-20 U.S.F. x .750 in.)	- - - - - - - - - 4

Fig. No.	Index Number	Part Number	Nomenclature 1 2 3 4 5 6 7	Units Per Assy—Model R1820 -40 -40B -54 -60 -65 -71 -73 -87 -95 -97
6	1515	27D1	WASHER—External hydro-oil supply tube adapter to supercharger rear housing (.266 in. x .500 in. x .033 in.)	– – – – – – – – – 4
6	1517	166D3	BUSHING—External hydro-oil supply tube adapter (.375 in. & .500 in. pipe thread, hex head)	– – – – – – – – – 1
6	1519	159D17	ELBOW—External hydro-oil supply tube adapter bushing (90°)	– – – – – – – – – 1
		AN913-3	PLUG—External hydro-oil supply tube adapter bushing elbow substituting (.375 in.-18) (Wright Part No. 2105D3)	– – – – – – – – – 1

EXTERNAL HYDRO-OIL SUPPLY TUBES (SUPERCHARGER REAR COVER TO CRANKCASE FRONT SECTION)

Except where otherwise noted, all of the parts listed in this group were factory installed on all -54 and -60 engines and the following engines:
-71 (153016 to 153085)
-87 (152542 to 152555, 153106 to 153210, 183086 to 183111 and 189980 to 190063)
-97 (47467, 81085 to 81104, 81712 to 81797, 81978 to 82306 and 190066 to 190522)

		420750	TUBE ASSEMBLY—External hydro-oil supply, front – – – 1 – – – – – –

Factory installed on the following engines:
-60 (47468, 47469, 73363 to 73429, 73432 to 73553, 155789 to 155817, 155824 to 155879, 156346 to 157276 and 426451 to 426720)
420750 is 15.66 in. in overall length.

AVIALOGS
WWW.AVIALOGS.COM

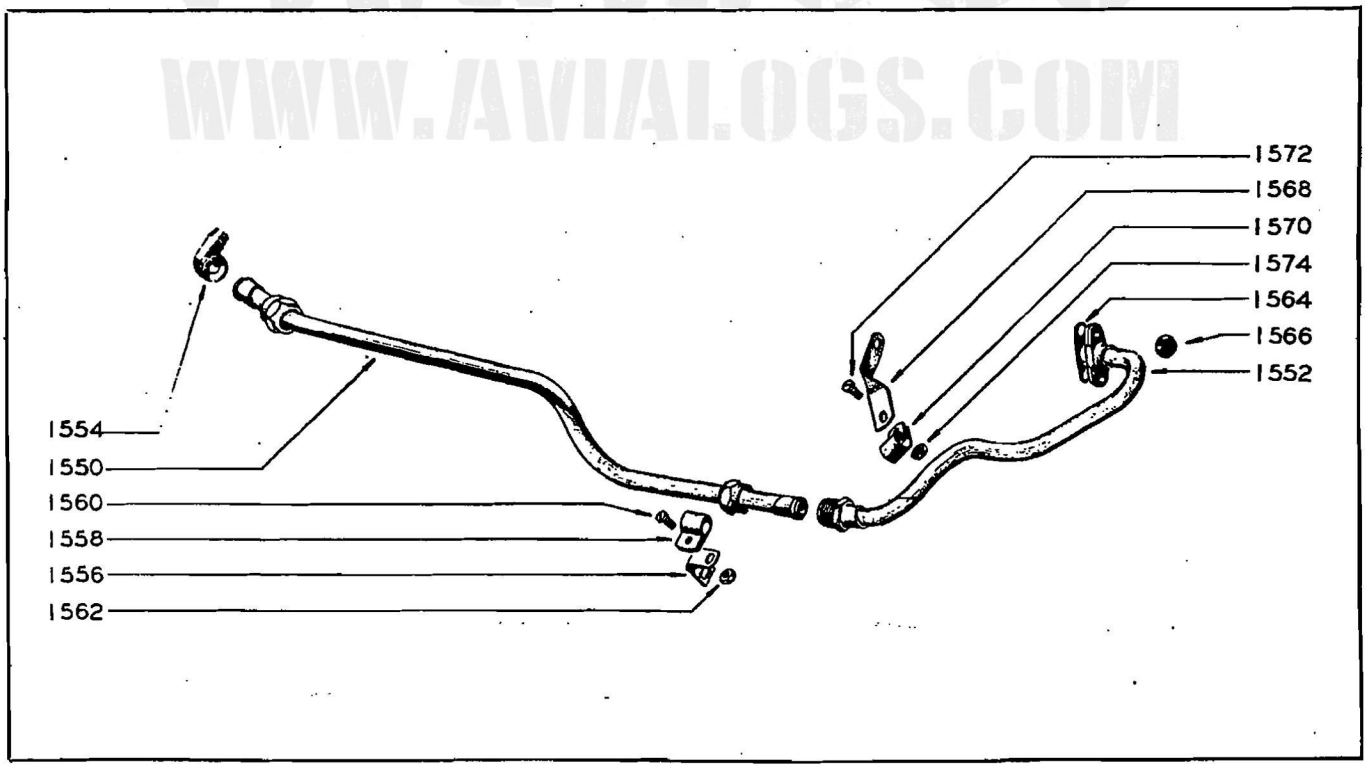

Numbers shown are index numbers and are numerically arranged in the Group Assembly Parts List

Figure 7—External Hydro-Oil Tubes (Supercharger Rear Cover to Crankcase Front Section)

Fig. No.	Index Number	Part Number	Nomenclature 1 2 3 4 5 6 7	Units Per Assy—Model R1820 -40	-40B	-54	-60	-65	-71	-73	-87	-95	-97
7	1550	420286	TUBE ASSEMBLY—External hydro-oil supply, front. *Factory installed on all -54, -71, -87 and -97 engines and the following engines: -60 (73229 to 73279, 73304 to 73362, 73554 to 73914, 80137 to 80279, 88168 to 88196, 155763 to 155788, 156289 to 156345, 157277 to 158093, 183147 to 183464, 425321 to 426450 and 454477 to 455407)* *420286 is 16.02 in. in overall length.*	–	–	1	1	–	1	–	1	–	1
		* 120353	TUBE—External hydro-oil supply, front. *Part of assembly 420750.*	–	–	–	1	–	–	–	–	–	–
		* 118509	TUBE—External hydro-oil supply, front. *Part of assembly 420286.*	–	–	1	1	–	1	–	1	–	1
		* 157D8	CONE—External hydro-oil supply front tube.	–	–	2	2	–	2	–	2	–	2
		* 156D11	NUT—External hydro-oil supply front tube.	–	–	2	2	–	2	–	2	–	2
7	1552	420287	TUBE ASSEMBLY—External hydro-oil supply, rear.	–	–	1	1	–	1	–	1	–	1
		* 118510	TUBE—External hydro-oil supply, rear.	–	–	1	1	–	1	–	1	–	1
		* 169D11	COUPLING—External hydro-oil supply rear tube.	–	–	1	1	–	1	–	1	–	1
		* 2011D5	FLANGE—External hydro-oil supply rear tube	–	–	1	1	–	1	–	1	–	1
		163D87	FITTING—External hydro-oil supply front tube. *Used with tube assembly 420750.*	–	–	–	1	–	–	–	–	–	–
		159D17	ELBOW—External hydro-oil supply front tube (90 degrees). *Used with tube assembly 420750.*	–	–	–	1	–	–	–	–	–	–
7	1554	163D90	ELBOW—External hydro-oil supply front tube (120 degrees). *Used with assembly 420286.*	–	–	1	1	–	1	–	1	–	1
7	1556	118940	BRACKET—External hydro-oil supply front tube.	–	–	1	1	–	1	–	1	–	1
7	1558	118942	CLAMP—External hydro-oil supply front tube to bracket.	–	–	1	1	–	1	–	1	–	1
7	1560	86D2	SCREW—External hydro-oil supply front tube bracket clamp.	–	–	1	1	–	1	–	1	–	1
7	1562	2087D9	NUT—External hydro-oil supply front tube to bracket clamp.	–	–	1	1	–	1	–	1	–	1
		@ 129D88	GASKET—External hydro-oil supply rear tube flange (early type). *Superseded by 129D64.*	–	–	1	1	–	1	–	1	–	1
7	1564	129D64	GASKET—External hydro-oil supply rear tube flange (late type).	–	–	1	1	–	1	–	1	–	1
		2101D4	NUT—External hydro-oil supply rear tube to supercharger rear cover. *Used on engines having a drilled stud at this location.*	–	–	2	2	–	2	–	2	–	2
		57D1	COTTER PIN—External hydro-oil supply rear tube to supercharger rear cover nut. *Used with nut 2101D4.*	–	–	2	2	–	2	–	2	–	2
7	1566	4040D5	NUT—External hydro-oil supply rear tube to supercharger rear cover. *Used on engines having a plain stud at this location.*	–	–	2	2	–	2	–	2	–	2
7	1568	118941	BRACKET—External hydro-oil supply rear tube.	–	–	1	1	–	1	–	1	–	1
7	1570	118942	CLAMP—External hydro-oil supply rear tube to bracket.	–	–	1	1	–	1	–	1	–	1
7	1572	86D2	SCREW—External hydro-oil supply rear tube bracket clamp.	–	–	1	1	–	1	–	1	–	1
7	1574	2087D9	NUT—External hydro-oil supply rear tube bracket clamp.	–	–	1	1	–	1	–	1	–	1

Fig. No.	Index Number	Part Number	Nomenclature 1 2 3 4 5 6 7	Units Per Assy—Model R1820 -40	-40B	-54	-60	-65	-71	-73	-87	-95	-97
			OIL SUMP										
		89905	SUMP ASSEMBLY COMPLETE—Oil..... *Factory installed on all -73 and -95 engines and on the following engines:* *-40* (31651 to 31674, 31676 to 31722, 45777 to 45876 and 45879 to 45928) *-65* (29347, 29898 to 29997, 30018 to 30050, 41102 to 41122, 41124 to 41133, 41136 to 41267, 44242 to 44295, 44311 to 45387, 45394 to 45399, 45401 to 45474, 45939 to 47072, 47173 to 47247 and 47273 to 47375) *-71* (41296 to 41298, 41418, 41487 to 41506, 44231 to 44241 and 44296 to 44307) *-87* (73155 to 73171, 73280 to 73303, 86997 to 87005, 87546 to 87559 and 93880 to 93885) *-97* (69425 to 69596) *89905 is used for engines not equipped with an external oil suction tube installed between the oil sump and oil pump.* *89905 includes an oil strainer without an oil tube connection.*	1	–	–	–	1	1	1	1	1	1
		890033	SUMP ASSEMBLY COMPLETE—Oil..... *Factory installed on -40 engines 45932 to 45934.* *890033 is used for engines equipped with an external oil suction tube installed between the oil sump and oil pump.* *890033 includes an oil strainer having a 1.25 in. long oil tube connection in the head.*	1	–	–	–	–	–	–	–	–	–
		890116	SUMP ASSEMBLY COMPLETE—Oil..... *Factory installed on all -40B, -54 and -60 engines and on the following engines:* *-40* (94528 to 94567, 152790 to 152799, 152818 to 152820 and 152854 to 152943) *-65* (47073 to 47172, 47248 to 47272 and 47376 to 47456) *-71* (41442, 41443, 41469 to 41486, 41510 to 41514, 45545 to 45549, 45560, 152629 to 152667, 152772 to 152787, 152802 to 152805, 152810 to 152817, 152824 to 152839, 152842 to 152853 and 152944 to 153085) *-87* (47457 to 47466, 73172 to 73228, 79867 to 80136, 80302 to 80360, 87006 to 87532, 87560 to 87857, 88098 to 88167, 93886 to 94527, 94568 to 94577, 152491 to 152555, 152821 to 152823, 153086 to 153210, 183060 to 183146 and 189949 to 190065) *-97* (47467, 69597 to 73154, 80787 to 81234, 81236 to 82306 and 190066 to 190522) *890116 is used for engines equipped with an external oil suction tube installed between th oil sump and oil pump.* *890116 includes an oil strainer having a .250 in. long oil tube connection in the head.*	1	1	1	1	1	1	–	1	–	1
8	1600	421407	SUMP MACHINING ASSEMBLY—Oil.... *Supersedes and supplied for replacement of 89876.*	1	1	1	1	1	1	1	1	1	1
		* 68481	SUMP—Oil.....	1	1	1	1	1	1	1	1	1	1
		* 2132D14	PLUG—Oil sump core hole.....	1	1	1	1	1	1	1	1	1	1
8	1602	¢ 4015D102	BUSHING—Cylinder air deflector screw, screw.....	2	2	2	2	2	2	2	2	2	2
		4015H102	BUSHING—Same as 4015D102 except .003 in. OS OD.....	AR	AR	AR	AR	AR	AR	AR	AR	AR	AR
		4015S102	BUSHING—Same as 4015D102 except .007 in. OS OD.....	AR	AR	AR	AR	AR	AR	AR	AR	AR	AR

AVIATORS
WWW.AVIATORS.COM

Fig. No.	Index Number	Part Number	Nomenclature 1 2 3 4 5 6 7	Units Per Assy—Model R1820 -40	-40B	-54	-60	-65	-71	-73	-87	-95	-97

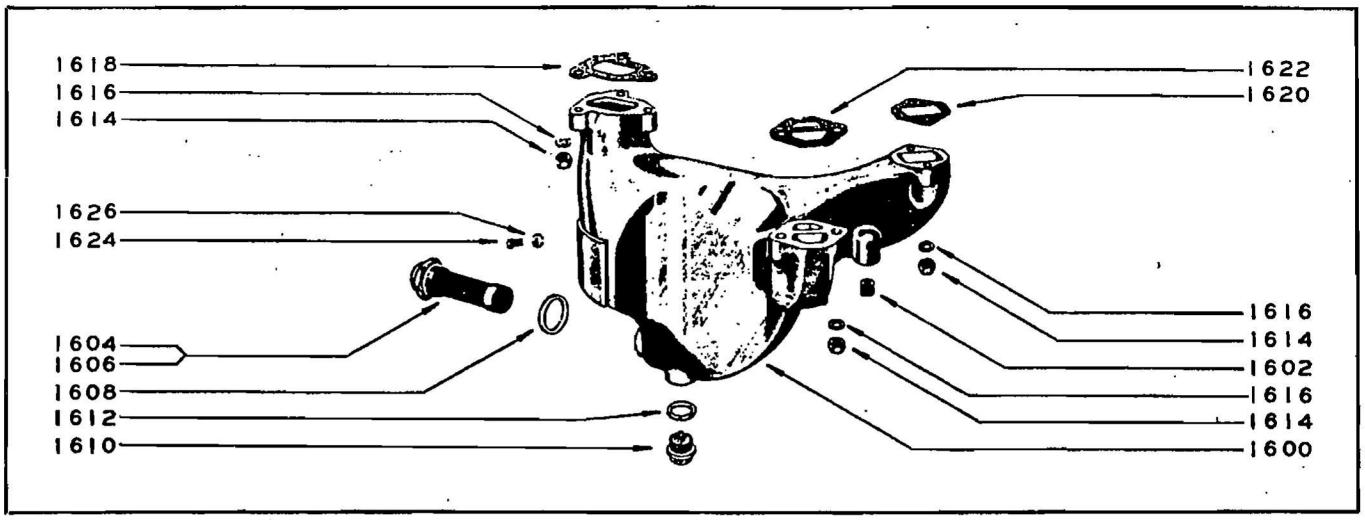

Numbers shown are index numbers and are numerically arranged in the Group Assembly Parts List

Figure 8—Oil Sump

		4015J102	BUSHING—Same as 4015D102 except .012 in. OS OD	AR	AR	AR	AR	AR	AR	AR	AR	AR	AR
8	1604	416186	STRAINER ASSEMBLY—Oil sump. *Part of assembly 89905.*	1	–	–	–	1	1	1	1	1	1
		416626	STRAINER ASSEMBLY—Oil sump. *Part of assembly 890033.*	1	–	–	–	–	–	–	–	–	–
8	1606	417625	STRAINER ASSEMBLY—Oil sump. *Part of assembly 890116.*	1	1	1	1	1	1	–	1	–	1
		* 113961	STRAINER—Oil sump	1	1	1	1	1	1	1	1	1	1
		* 26226	SLEEVE—Oil sump strainer	1	1	1	1	1	1	1	1	1	1
		* 114523	CONNECTION—External oil suction tube adapter. *Part of assembly 416626.*	1	–	–	–	–	–	–	–	–	–
		* 115749	CONNECTION—External oil suction tube adapter. *Part of assembly 417625.*	1	1	1	1	1	1	–	1	–	1
		* 129143	PLUG—Oil sump strainer. *Part of assembly 416186. Supersedes 2072D2.*	1	–	–	–	1	1	1	1	1	1
8	1608	AN900-22	GASKET—Oil sump strainer (Wright Part No. 23D23)	1	1	1	1	1	1	1	1	1	1
8	1610	651-TE	PLUG—Oil sump drain, magnetic (Lisle Corporation) (Wright Part No. 2091D4). *Includes gasket AN900-16.*	1	1	1	1	1	1	1	1	1	1
8	1612	AN900-16	GASKET—Oil sump drain plug (Wright Part No. 23D5)	1	1	1	1	1	1	1	1	1	1
8	1614	4040D6	NUT—Oil sump to supercharger front housing and crankcase front section	7	7	7	7	7	7	7	7	7	7
8	1616	34D14	WASHER—Oil sump to supercharger front housing and crankcase front section	7	7	7	7	7	7	7	7	7	7
8	1618	68514	GASKET—Oil sump to crankcase front section	1	1	1	1	1	1	1	1	1	1
8	1620	68515	GASKET—Oil sump to supercharger front housing, RH	1	1	1	1	1	1	1	1	1	1
8	1622	68516	GASKET—Oil sump to supercharger front housing, LH	1	1	1	1	1	1	1	1	1	1
		* 117444	PLATE—Engine name. *Supersedes 112414.*	1	1	1	1	1	1	1	1	1	1
8	1624	125D114	BOLT—Engine name plate to oil sump	4	4	4	4	4	4	4	4	4	4
8	1626	2067D10	LOCKWASHER—Engine name plate to oil sump.	4	4	4	4	4	4	4	4	4	4

Fig. No.	Index Number	Part Number	Nomenclature	Per Engine	Quantity Used Per Assembly
					4 4 4 4 4 4 4 4 4 4
					1 1 1 1 2 1 1 1 1 1
					4 6 8 8 3 7 7 8 6 7
					1 5 6 9 1 8 6 9 6 8
					1 2 2 5 9 6 9 5 3 3
			1 2 3 4 5 6 7		1 6 2 1 0 0 6 3 1 6

OIL PUMP SYSTEM

OIL PUMP

414111 PUMP ASSEMBLY COMPLETE—Oil (With one electric and one mechanical tachometer drive)..... 1

Factory installed on all -73 engines and on the following engines:

-40 (31651 to 31674 and 31676 to 31711)

-65 (29347, 29898 to 29997, 30018 to 30050; 41102 to 41122, 41124 to 41133, 41136 to 41267, 44242 to 44295, 44311 to 45387, 45394 to 45399, 45401 to 45474, 45939 to 47072, 47173 to 47247 and 47273 to 47375)

-71 (41296 to 41298, 41418, 41487 to 41506, 44231 to 44241 and 44296 to 44307)

-87 (73155 to 73171, 73280 to 73303, 86997 to 87005, 87546 to 87559 and 93880 to 93885)

-95 (31741 to 31748, 31750 to 31752, 31805, 31812, 31814, 31818 and 31823)

-97 (69425 to 69596)

414111 has the tachometer drives driven at one-half engine speed and includes a check valve. For replacement on Navy engines use 416526.

416526 PUMP ASSEMBLY COMPLETE—Oil (With one electric and one mechanical tachometer drive)..... 1

Factory installed on the following engines:

-40 (31712 to 31722, 45777 to 45876 and 45879 to 45928)

416526 has the tachometer drives driven at one-half engine speed and does not include a check valve.

418622 PUMP ASSEMBLY COMPLETE—Oil (With one electric and one mechanical tachometer drive)..... 1

Factory installed on the following engines:

-95 (31732, 31733 and 80373 to 80376)

418622 has the tachometer drives driven at engine speed and includes a check valve.

@ 418951 PUMP ASSEMBLY COMPLETE—Oil (With one electric tachometer drive).. 1

Factory installed on the following engines:

-87 (87325 to 87348, 87350 to 87416, 87418, 87602 to 87617, 94041, 94043, 94045 to 94049, 94051, 94052, 94054 to 94061, 94063 to 94072 and 153086 to 153094)

418951 includes a check valve and ball type relief valve.

Superseded by 417860.

423190 PUMP ASSEMBLY COMPLETE—Oil (With one electric tachometer drive).. 1

Factory installed on -54 engines 429264 to 429293.

423190 includes a check valve and piston type relief valve.

AVIATORS
WWW.AVIATORS.COM

Fig. No.	Index Number	Part Number	Nomenclature 1 2 3 4 5 6 7	Per Engine	Quantity Used Per Assembly
		417696	PUMP ASSEMBLY COMPLETE—Oil (With one electric tachometer drive)..	1	
			Factory installed on all -40B engines and on the following engines:		
			-40 (94528 to 94567, 152790 to 152799, 152818 to 152820 and 152854 to 152943)		
			-54 (86728 to 86737)		
			-60 (72730 to 73233, 73235, 73237, 73238, 73240, 73241, 73243, 73244, 73246 to 73249, 73251, 73255, 73256, 73259, 73263, 73268, 73271 to 73274, 80252, 80253, 156316 to 158093, 183147 to 183464, 425321 to 425535, 425537 to 425809, 425811 to 426720 and 454477 to 455407)		
			-87 (88098 to 88167, 94568 to 94577 and 183112 to 183146)		
			417696 includes a piston type relief valve but does not include a check valve.		
			For replacement on Army engines use 417860.		
		417860	PUMP ASSEMBLY COMPLETE—Oil (With one electric tachometer drive)..	1	
			Factory installed on the following engines:		
			-54 (86727, 86738 to 86866, 429167 to 429263, 429294 to 429376 and 452267 to 452378)		
			-60 (47468, 47469, 73229, 73234, 73236, 73239, 73242, 73245, 73250, 73252 to 73254, 73257, 73258, 73260 to 73262, 73266, 73267, 73269, 73270, 73275 to 73279, 73304 to 73429, 73432 to 73914, 80137 to 80251, 80254 to 80279, 88168 to 88196, 155763 to 155817, 155824 to 155879, 156289 to 156315, 425536 and 425810)		
			-71 (45545 to 45549)		
			-87 (47457 to 47466, 73172 to 73228, 79867 to 80136, 80302 to 80360, 87006 to 87324, 87349, 87417, 87419 to 87532, 87560 to 87601, 87618 to 87857, 93886 to 94040, 94042, 94044, 94050, 94053, 94062, 94073 to 94527, 152491 to 152555, 152821 to 152823, 153095 to 153210, 183060 to 183111 and 189949 to 190065)		
			-97 (190250 to 190522)		
			417860 includes a check valve and piston type relief valve.		
		@ 418953	PUMP ASSEMBLY COMPLETE—Oil (With two mechanical tachometer drives).....	1	
			Factory installed on the following engines:		
			-97 (72520 to 72564, 72567 to 72588, 72590 to 72641, 72643 to 72648, 72650, 72652 to 72654, 72656, 72658, 72659, 72661, 72663 to 72669, 72671, 72673 to 72679, 72681, 72683, 72688, 72690 to 72695, 72697 to 72715, 72717 to 72721, 72723, 72724, 72726 to 72728, 72730 to 72736, 72739, 72741 to 72756, 72758, 72759, 72761, 72762, 72764, 72767, 72768, 72770, 72772, 72774 to 72784,		

Fig. No.	Index Number	Part Number	Nomenclature 1 2 3 4 5 6 7	Per Engine	Quantity Used Per Assembly 414111	416526	418622	418951	423190	417860	417696	418953	416631	417836
			72786 to 72797, 72799 to 72804, 72806 to 72811, 72813 to 72817, 72819 and 72820) *418953 includes a check valve and ball type relief valve.* *Superseded by 417836.*											
		416631	PUMP ASSEMBLY COMPLETE—Oil (With two mechanical tachometer drives)..... *Factory installed on -40 engines 45932 to 45934.* *416631 includes a piston type relief valve but does not include a check valve.*	1										
		417836	PUMP ASSEMBLY COMPLETE—Oil (With two mechanical tachometer drives)..... *Factory installed on all -65 and -71 engines and on the following engines:* *-97* (47467, 69597 to 72519, 72565, 72566, 72589, 72642, 72649, 72651, 72655, 72657, 72660, 72662, 72670, 72672, 72680, 72682, 72684 to 72687, 72689, 72696, 72716, 72722, 72725, 72729, 72737, 72738, 72740, 72757, 72760, 72763, 72765, 72766, 72769, 72771, 72773, 72785, 72798, 72805, 72812, 72818, 72821 to 73154, 80787 to 81234, 81236 to 82306 and 190066 to 190249) *417836 includes a check valve and piston type relief valve.*	1										
9	1675	414109	PUMP STUDDING AND BUSHING ASSEMBLY—Oil.....	1	1	1	1	–	–	–	–	–	–	–
10, 11	1677	417651	PUMP STUDDING AND BUSHING ASSEMBLY—Oil.....	1	–	–	–	1	1	1	1	1	–	1
		416625	PUMP STUDDING AND BUSHING ASSEMBLY—Oil.....	1	–	–	–	–	–	–	–	–	1	–
		* 414032	PUMP MACHING ASSEMBLY—Oil.....	1	1	1	1	–	–	–	–	–	–	–
		* 417660	PUMP MACHINING ASSEMBLY Oil.....	1	–	–	–	1	1	1	1	1	–	1
		* 416629	PUMP MACHINING ASSEMBLY Oil.....	1	–	–	–	–	–	–	–	–	1	–
		* 414023	COVER STUDDING ASSEMBLY—Tachometer drive shaft gear housing.....	1	1	1	1	–	–	–	–	–	–	–
		* 417661	COVER STUDDING ASSEMBLY—Tachometer drive shaft gear housing.....	1	–	–	–	1	1	1	1	1	–	1
		* 417494	COVER STUDDING ASSEMBLY—Tachometer drive shaft gear housing.....	1	–	–	–	–	–	–	–	–	1	–
		* 414022	COVER AND BUSHING ASSEMBLY—Tachometer drive shaft gear housing.....	1	1	1	1	–	–	–	–	–	–	–
		* 417628	COVER AND BUSHING ASSEMBLY—Tachometer drive shaft gear housing.....	1	–	–	–	1	1	1	1	1	–	1
		* 416628	COVER AND BUSHING ASSEMBLY—Tachometer drive shaft gear housing.....	1	–	–	–	–	–	–	–	–	1	–

AVIALOGS
WWW.AVIALOGS.COM

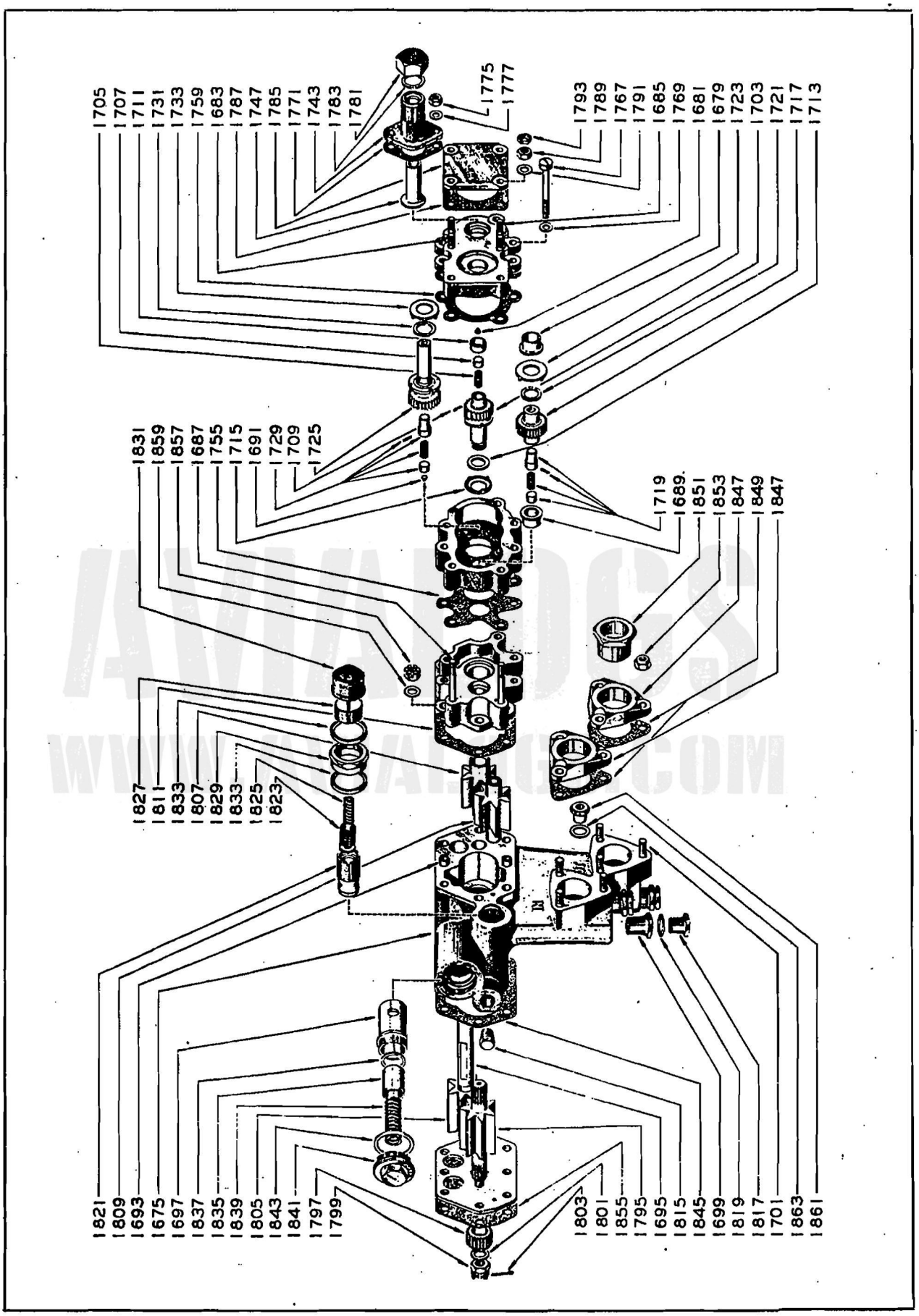

Numbers shown are index numbers and are numerically arranged in the Group Assembly Parts List

Figure 9—Oil Pump (With One Electric and One Mechanical Tachometer Drive)

Fig. No.	Index Number	Part Number	Nomenclature	Per Engine	Quantity Used Per Assembly									
					4 1 4 1	4 1 6 2	4 1 8 2	4 1 8 5	4 2 3 9	4 1 7 0	4 1 7 0	4 1 8 6	4 1 6 3	4 1 7 6
		* 111355	COVER—Tachometer drive shaft gear housing	1	1	1	1	–	–	–	–	–	–	–
		* 115754	COVER—Tachometer drive shaft gear housing	1	–	–	–	1	1	1	1	1	–	1
		* 114525	COVER—Tachometer drive shaft gear housing	1	–	–	–	–	–	–	–	–	1	–
9, 10, 11	1679	68345	BUSHING — Electric tachometer drive gear or mechanical tachometer drive pinion drive gear, rear	1	1	1	1	1	1	1	1	1	1	1
9, 10, 11	1681	115946	BUTTON — Tachometer drive shaft gear thrust	1	1	1	1	1	1	1	1	1	1	1
9, 10, 11	1683	¢ 2144D75	STUD—Tachometer drive shaft gear housing cover to tachometer or substituting cover *Supersedes 2137D75.*	2	2	2	2	2	2	2	2	2	2	2
		2144H75	STUD—Same as 2144D75 except .003 in. OS OD	AR	AR	AR	AR	AR	AR	AR	AR	AR	AR	AR
		2144S75	STUD—Same as 2144D75 except .007 in. OS OD	AR	AR	AR	AR	AR	AR	AR	AR	AR	AR	AR
		2144J75	STUD—Same as 2144D75 except .012 in. OS OD	AR	AR	AR	AR	AR	AR	AR	AR	AR	AR	AR
9	1685	¢ 118D6	STUD—Tachometer drive shaft gear housing cover to mechanical tachometer drive housing	2	2	2	2	–	–	–	–	–	–	–
		118H6	STUD—Same as 118D6 except .003 in. OS OD	AR	AR	AR	AR	–	–	–	–	–	–	–
		118S6	STUD—Same as 118D6 except .007 in. OS OD	AR	AR	AR	AR	–	–	–	–	–	–	–
		118J6	STUD—Same as 118D6 except .012 in. OS OD	AR	AR	AR	AR	–	–	–	–	–	–	–
		* 414024	COVER STUDDING ASSEMBLY—Oil pump	1	1	1	1	–	–	–	–	–	–	–
		* 416027	COVER STUDDING ASSEMBLY—Oil pump	1	–	–	–	1	1	1	1	1	1	1
		* 111353	COVER—Oil pump	1	1	1	1	–	–	–	–	–	–	–
		* 114531	COVER—Oil pump	1	–	–	–	1	1	1	1	1	1	1
9, 10, 11	1687	¢ 2028D32	STUD—Oil pump cover to electric tachometer or mechanical tachometer drive housing	2	2	2	2	2	2	2	2	2	2	2
		2028H32	STUD—Same as 2028D32 except .003 in. OS OD	AR	AR	AR	AR	AR	AR	AR	AR	AR	AR	AR
		2028S32	STUD—Same as 2028D32 except .007 in. OS OD	AR	AR	AR	AR	AR	AR	AR	AR	AR	AR	AR
		2028J32	STUD—Same as 2028D32 except .012 in. OS OD	AR	AR	AR	AR	AR	AR	AR	AR	AR	AR	AR

AVIATIONGS
WWW.AVIATIONGS.COM

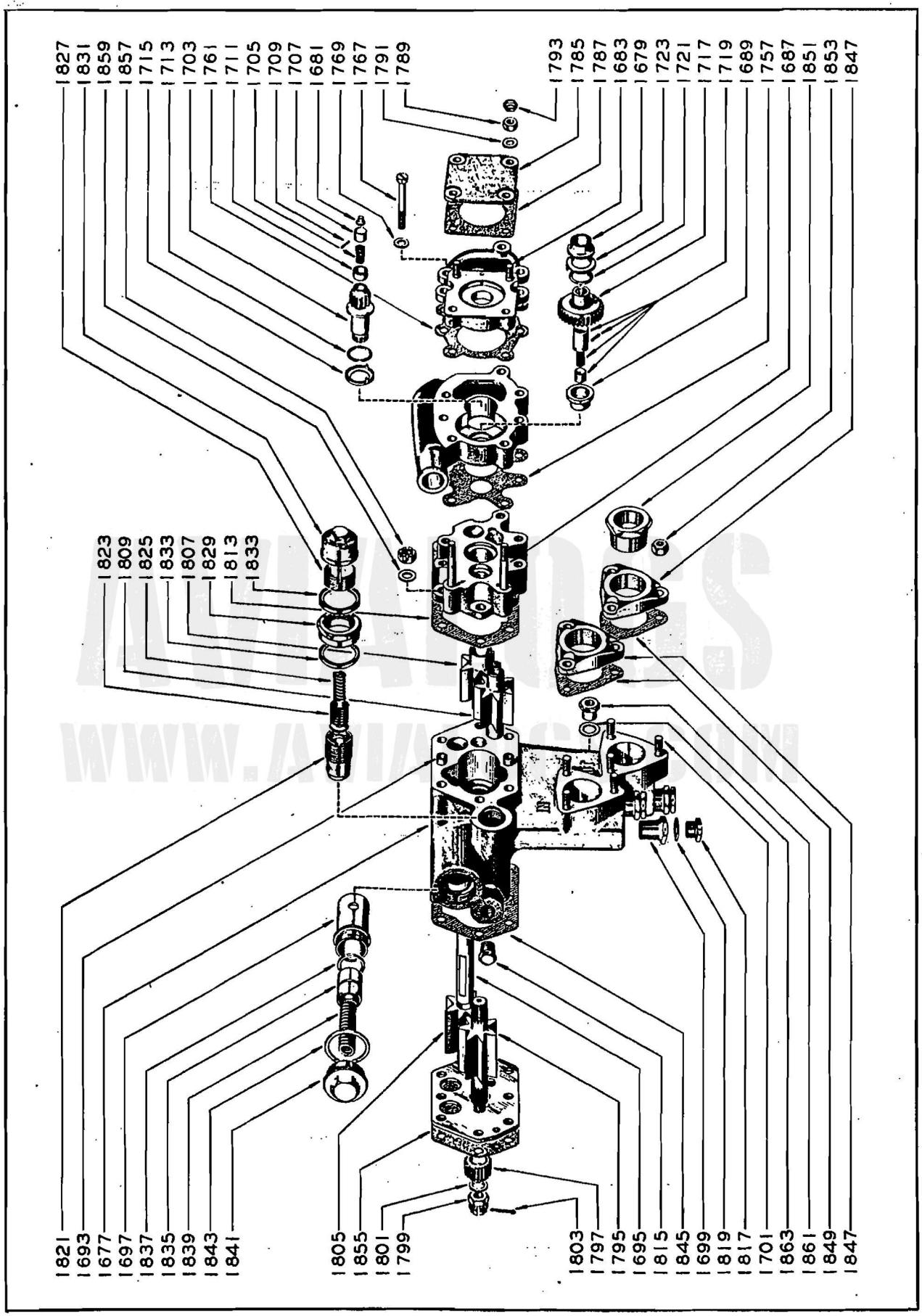

Numbers shown are index numbers and are numerically arranged in the Group Assembly Parts List

Figure 10—Oil Pump (With One Electric Tachometer Drive)

Fig. No.	Index Number	Part Number	Nomenclature	Per Engine	Quantity Used Per Assembly									
					4 1 4 1	4 1 6 5	4 1 8 6	4 1 8 9	4 2 3 1	4 1 7 8	4 1 7 6	4 1 8 9	4 1 6 5	4 1 7 8
					1	2	2	5	9	6	9	5	3	3
					1	6	2	1	0	0	6	3	1	6
		* 414021	HOUSING AND BUSHING ASSEMBLY — Tachometer drive shaft gear..	1	1	1	1	–	–	–	–	–	–	–
		* 417027	HOUSING AND BUSHING ASSEMBLY — Tachometer drive shaft gear..	1	–	–	–	1	1	1	1	1	–	1
		* 416624	HOUSING AND BUSHING ASSEMBLY — Tachometer drive shaft gear..	1	–	–	–	–	–	–	–	–	1	–
		* 111354	HOUSING — Tachometer drive shaft gear....	1	1	1	1	–	–	–	–	–	–	–
		* 115755	HOUSING — Tachometer drive shaft gear....	1	–	–	–	1	1	1	1	1	–	1
		* 114530	HOUSING — Tachometer drive shaft gear....	1	–	–	–	–	–	–	–	–	1	–
9, 10, 11	1689	110432	BUSHING—Electric tachometer drive gear or mechanical tachometer drive pinion gear, rear.....	1	1	1	1	1	1	1	1	1	1	1
9	1691	115946	BUTTON — Mechanical tachometer drive shaft gear thrust...	1	1	1	1	–	–	–	–	–	–	–
		* 110434	BODY—Oil pump.....	1	1	1	1	–	–	–	–	–	–	–
		* 114522	BODY—Oil pump.....	1	–	–	–	1	1	1	1	1	1	1
		* 66189N2	PLATE—Oil pump end..... *Supersedes 66189.*	1	1	1	1	1	1	1	1	1	1	1
9, 10, 11	1693	66185	DOWEL—Oil pump.....	4	4	4	4	4	4	4	4	4	4	4
		* 13D35	PIN—Tachometer drive shaft gear housing locating....	4	4	4	4	4	4	4	4	4	4	4
9, 10, 11	1695	66186	SHAFT—Oil suction pump gear	1	1	1	1	1	1	1	1	1	1	1
9, 10, 11	1697	66449	BODY—Oil pump check valve.	1	1	1	1	1	1	1	1	1	1	1
9, 10, 11	1699	64280	BUSHING—Oil pump thermometer bulb connection.....	3	3	3	3	3	3	3	3	3	3	3
9, 10, 11	1701	¢ 2029D9	STUD—Oil pump body to inlet and outlet connection flange.....	6	6	6	6	6	6	6	6	6	6	6
		2029H9	STUD—Same as 2029D9 except .003 in. OS OD.....	AR	AR	AR	AR	AR	AR	AR	AR	AR	AR	AR
		2029S9	STUD—Same as 2029D9 except .007 in. OS OD.....	AR	AR	AR	AR	AR	AR	AR	AR	AR	AR	AR
		2029J9	STUD—Same as 2029D9 except .012 in. OS OD.....	AR	AR	AR	AR	AR	AR	AR	AR	AR	AR	AR
9, 10, 11	1703	413331	GEAR ASSEMBLY—Tachometer drive shaft.....	1	1	1	–	1	1	1	1	1	1	1
		414027	GEAR ASSEMBLY—Tachometer drive shaft.....	1	–	–	1	–	–	–	–	–	–	–
		* 110428	GEAR—Tachometer drive shaft....	1	1	1	–	1	1	1	1	1	1	1
		* 111375	GEAR—Tachometer drive shaft....	1	–	–	1	–	–	–	–	–	–	–
9, 10, 11	1705	112989	SPRING—Tachometer drive shaft gear oil seal thrust.....	1	1	1	1	1	1	1	1	1	1	1
9, 10, 11	1707	115896	RETAINER—Tachometer drive shaft gear oil seal thrust spring.....	1	1	1	1	1	1	1	1	1	1	1
9, 10, 11	1709	87D9	PIN—Tachometer drive shaft gear oil seal thrust spring retaining	1	1	1	1	1	1	1	1	1	1	1
9, 10, 11	1711	110429	SLEEVE—Tachometer drive shaft gear.....	1	1	1	1	1	1	1	1	1	1	1
9, 10, 11	1713	2083D1	RING—Tachometer drive shaft gear oil seal.....	1	1	1	1	1	1	1	1	1	1	1
9, 10, 11	1715	110433	RETAINER—Tachometer drive shaft gear oil seal ring.....	1	1	1	1	1	1	1	1	1	1	1
9, 10	1717	417751	GEAR ASSEMBLY COMPLETE—Electric tachometer drive..... *Supersedes 413333.*	1	1	1	–	1	1	1	1	–	–	–

AVIA-DOCS
WWW.AVIA-DOCS.COM

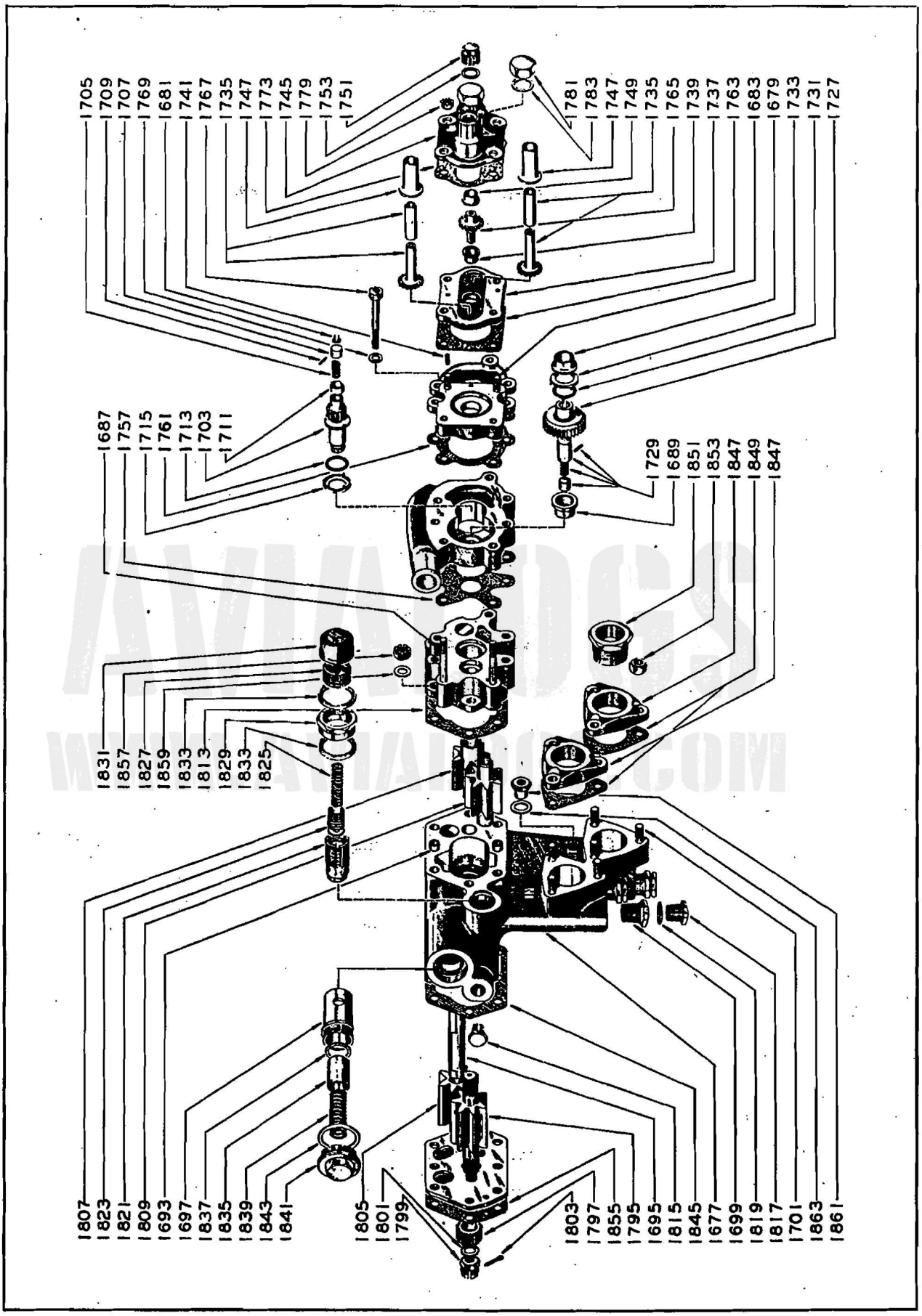

Numbers shown are index numbers and are numerically arranged in the Group Assembly Parts List

Figure 11—Oil Pump (With Two Mechanical Tachometer Drives)

Fig. No.	Index Number	Part Number	Nomenclature 1 2 3 4 5 6 7	Quantity Used: Per Engine	Per Assembly: 414111	416526	418622	418951	423190	417860	417696	418953	416631	417836
		418282	GEAR ASSEMBLY COMPLETE—Electric tachometer drive	1	–	–	1	–	–	–	–	–	–	–
9, 10	1719	417577	BUSHING ASSEMBLY — Electric tachometer drive gear oil seal thrust spring	1	1	1	1	1	1	1	1	–	–	–
			Supersedes 412362.											
		* 115897	BUSHING—Electric tachometer drive gear oil seal thrust spring	1	1	1	1	1	1	1	1	–	–	–
		* 112989	SPRING—Electric tachometer drive gear oil seal thrust	1	1	1	1	1	1	1	1	–	–	–
		* 115896	RETAINER—Electric tachometer drive gear oil seal thrust spring	1	1	1	1	1	1	1	1	–	–	–
		* 87D9	PIN—Electric tachometer drive gear oil seal thrust spring retaining	1	1	1	1	1	1	1	1	–	–	–
		* 115960	GEAR—Electric tachometer drive	1	1	1	–	1	1	1	1	–	–	–
		* 116854	GEAR—Electric tachometer drive	1	–	–	1	–	–	–	–	–	–	–
9, 10	1721	2083D1	RING—Electric tachometer drive gear oil seal	1	1	1	1	1	1	1	1	–	–	–
9, 10	1723	68408	RETAINER—Electric tachometer drive gear oil seal ring	1	1	1	1	1	1	1	1	–	–	–
9	1725	417576	GEAR ASSEMBLY COMPLETE—Mechanical tachometer drive shaft	1	1	1	–	–	–	–	–	–	–	–
			Supersedes 411665.											
		418278	GEAR ASSEMBLY COMPLETE—Mechanical tachometer drive shaft	1	–	–	1	–	–	–	–	–	–	–
11	1727	417751	GEAR ASSEMBLY COMPLETE—Mechanical tachometer drive shaft pinion drive	1	–	–	–	–	–	–	–	1	1	1
9, 11	1729	417577	BUSHING ASSEMBLY—Mechanical tachometer drive shaft gear or pinion drive gear oil seal thrust spring	1	1	1	1	–	–	–	–	1	1	1
			Supersedes 412362.											
		* 115897	BUSHING—Mechanical tachometer drive shaft gear or pinion drive gear oil seal thrust spring	1	1	1	1	–	–	–	–	1	1	1
		* 112989	SPRING—Mechanical tachometer drive shaft gear or pinion drive gear oil seal thrust	1	1	1	1	–	–	–	–	1	1	1
		* 115896	RETAINER — Mechanical tachometer drive shaft gear or pinion drive gear oil seal thrust spring	1	1	1	1	–	–	–	–	1	1	1
		* 87D9	PIN—Mechanical tachometer drive shaft gear or pinion drive gear oil seal thrust spring retaining	1	1	1	1	–	–	–	–	1	1	1
		* 115884	GEAR—Mechanical tachometer drive shaft	1	1	1	–	–	–	–	–	–	–	–
		* 116856	GEAR—Mechanical tachometer drive shaft	1	–	–	1	–	–	–	–	–	–	–
		* 115960	GEAR—Mechanical tachometer drive pinion drive	1	–	–	–	–	–	–	–	1	1	1
		* 68343	SLEEVE—Mechanical tachometer drive shaft gear	1	1	1	1	–	–	–	–	–	–	–
9, 11	1731	2083D1	RING—Mechanical tachometer drive shaft gear or pinion drive gear oil seal	1	1	1	1	–	–	–	–	1	1	1

AVIALOGS
WWW.AVIALOGS.COM

Fig. No.	Index Number	Part Number	Nomenclature 1 2 3 4 5 6 7	Quantity Used: Per Engine	Per Assembly: 414111	416526	418622	418951	423190	417860	417696	418953	416631	417836
9, 11	1733	68408	RETAINER—Mechanical tachometer drive shaft gear or pinion drive gear oil seal ring	1	1	1	1	–	–	–	–	1	1	1
11	1735	415318	GEAR ASSEMBLY—Mechanical tachometer drive shaft	2	–	–	–	–	–	–	–	2	2	2
		* 112701	GEAR—Mechanical tachometer drive shaft	2	–	–	–	–	–	–	–	1	1	1
		* 68343	SLEEVE—Mechanical tachometer drive shaft gear	2	–	–	–	–	–	–	–	1	1	1
11	1737	416630	ADAPTER AND BUSHING ASSEMBLY—Mechanical tachometer drive shaft gear housing	1	–	–	–	–	–	–	–	1	1	1
		* 114528	ADAPTER—Mechanical tachometer drive shaft gear housing	1	–	–	–	–	–	–	–	1	1	1
11	1739	112703	BUSHING—Mechanical tachometer drive pinion	1	–	–	–	–	–	–	–	1	1	1
11	1741	20D12	PIN—Mechanical tachometer drive shaft gear housing aligning	2	–	–	–	–	–	–	–	2	2	2
9	1743	411667	HOUSING AND BUSHING ASSEMBLY—Mechanical tachometer drive shaft gear	1	1	1	1	–	–	–	–	–	–	–
11	1745	416623	HOUSING AND BUSHING ASSEMBLY—Mechanical tachometer drive shaft gear	1	–	–	–	–	–	–	–	1	1	1
		* 68371	HOUSING—Mechanical tachometer drive shaft gear	1	1	1	1	–	–	–	–	–	–	–
		* 114529	HOUSING—Mechanical tachometer drive shaft gear	1	–	–	–	–	–	–	–	1	1	1
9, 11	1747	68370	BUSHING—Mechanical tachometer drive shaft gear	1 or 2	1	1	1	–	–	–	–	2	2	2
11	1749	112703	BUSHING—Mechanical tachometer drive pinion	1	–	–	–	–	–	–	–	1	1	1
11	1751	2072D9	PLUG—Mechanical tachometer drive shaft gear housing	1	–	–	–	–	–	–	–	1	1	1
11	1753	37D100	WASHER—Mechanical tachometer drive shaft gear housing plug	1	–	–	–	–	–	–	–	1	1	1
9	1755	111356	GASKET—Tachometer drive shaft gear housing	1	1	1	1	–	–	–	–	–	–	–
10, 11	1757	114526	GASKET—Tachometer drive shaft gear housing	1	–	–	–	1	1	1	1	1	1	1
9	1759	111357	GASKET—Tachometer drive shaft gear housing cover	1	1	1	1	–	–	–	–	–	–	–
10, 11	1761	114524	GASKET—Tachometer drive shaft gear housing cover	1	–	–	–	1	1	1	1	1	1	1
11	1763	114520	GASKET—Mechanical tachometer drive shaft gear housing adapter	1	–	–	–	–	–	–	–	1	1	1
11	1765	112702	PINION—Mechanical tachometer drive	1	–	–	–	–	–	–	–	1	1	1
9, 10, 11	1767	137D11	SCREW—Tachometer drive shaft gear housing cover to oil pump cover	5	5	5	5	5	5	5	5	5	5	5
9, 10, 11	1769	34D51	WASHER—Tachometer drive shaft gear housing cover to oil pump cover	5	5	5	5	5	5	5	5	5	5	5
9	1771	129D67	GASKET—Mechanical tachometer drive shaft gear housing	1	1	1	1	–	–	–	–	–	–	–
11	1773	114521	GASKET—Mechanical tachometer drive shaft gear housing	1	–	–	–	–	–	–	–	1	1	1
9	1775	4040D4	NUT—Mechanical tachometer drive shaft gear housing to tachometer drive housing cover	2	2	2	2	–	–	–	–	–	–	–
9	1777	34D51	WASHER—Mechanical tachometer drive shaft gear housing to tachometer drive housing cover	2	2	2	2	–	–	–	–	–	–	–

AVIATIONS WWW.AVIATIONS.COM

Fig. No.	Index Number	Part Number	Nomenclature 1 2 3 4 5 6 7	Per Engine	Quantity Used Per Assembly									
					4 1 4 1	4 1 6 5	4 1 8 6	4 1 8 2	4 2 3 9	4 1 7 6	4 1 7 9	4 1 8 5	4 1 6 3	4 1 7 6
11	1779	1D95	NUT—Mechanical tachometer drive shaft gear housing to adapter	4	–	–	–	–	–	–	–	4	4	4
9, 11	1781	114574	CAP—Mechanical tachometer drive shaft gear housing	1	1	1	1	–	–	–	–	1	1	1
9, 11	1783	37D28	WASHER—Mechanical tachometer drive shaft gear housing cap	1	1	1	1	–	–	–	–	1	1	1
		@ 28922	COVER—Electric tachometer substituting (early type) *Superseded by 28922N3.*	1	1	1	1	1	1	1	1	–	–	–
9, 10	1785	28922N3	COVER—Electric tachometer substituting (late type)	1	1	1	1	1	1	1	1	–	–	–
9, 10	1787	69072	GASKET—Electric tachometer or substituting cover	1	1	1	1	1	1	1	1	–	–	–
9, 10	1789	2D1	NUT—Electric tachometer or substituting cover to tachometer drive housing	4	4	4	4	4	4	4	4	–	–	–
9, 10	1791	34D51	WASHER—Electric tachometer or substituting cover to tachometer drive housing	4	4	4	4	4	4	4	4	–	–	–
9, 10	1793	356-428	PALNUT—Electric tachometer or substituting cover to tachometer drive housing nut (Wright Part No. 2000D1)	4	4	4	4	4	4	4	4	–	–	–
		@ 128300	SHAFT—Oil pump drive *Superseded by 110426.*	1	–	–	–	–	1	–	–	–	–	–
9, 10, 11	1795	110426	SHAFT—Oil pump drive	1	1	1	1	1	–	1	1	1	1	1
9, 10, 11	1797	110423	COUPLING—Oil pump drive	1	1	1	1	1	1	1	1	1	1	1
9, 10, 11	1799	124D118	NUT—Oil pump drive coupling	1	1	1	1	1	1	1	1	1	1	1
9, 10, 11	1801	34D14	WASHER—Oil pump drive coupling	1	1	1	1	1	1	1	1	1	1	1
9, 10, 11	1803	58D1	COTTER PIN—Oil pump drive coupling nut	1	1	1	1	1	1	1	1	1	1	1
		128298	GEAR—Oil suction pump	1	–	–	–	–	1	–	–	–	–	–
9, 10, 11	1805	110562	GEAR—Oil suction pump	1	1	1	1	1	–	1	1	1	1	1
		128299	GEAR—Oil pressure pump drive	1	–	–	–	–	1	–	–	–	–	–
9, 10, 11	1807	110427	GEAR—Oil pressure pump drive	1	1	1	1	1	–	1	1	1	1	1
		128297	GEAR—Oil pressure pump	1	–	–	–	–	1	–	–	–	–	–
9, 10, 11	1809	110563	GEAR—Oil pressure pump	1	1	1	1	1	–	1	1	1	1	1
9	1811	68677	GASKET—Oil pump cover	1	1	1	1	–	–	–	–	–	–	–
10, 11	1813	114527	GASKET—Oil pump cover	1	–	–	–	1	1	1	1	1	1	1
9, 10, 11	1815	36D7	PLUG—Oil pressure gage connection *Supersedes 4042D2 at this location.*	1	1	1	1	1	1	1	1	1	1	1
9, 10, 11	1817	93D18	PLUG—Oil temperature gage connection substituting	3	3	3	3	3	3	3	3	3	3	3
9, 10, 11	1819	AN900-10	GASKET—Oil temperature gage connection substituting plug (Wright Part No. 23D16)	3	3	3	3	3	3	3	3	3	3	3
		117196	WASHER—Oil pressure relief valve (copper)	1	–	–	–	1	–	–	–	1	–	–
		117195	WASHER—Oil pressure relief valve (steel)	1	–	–	–	1	–	–	–	1	–	–
9, 10, 11	1821	65857	BODY—Oil pressure relief valve (1.78 in. long)	1	1	1	1	–	1	1	1	–	1	1
		116560	BODY—Oil pressure relief valve (1.56 in. long)	1	–	–	–	1	–	–	–	1	–	–
		@ 110568	VALVE—Oil pressure relief (early type) *110568 does not have oil vent holes in the piston end.* *For replacement, make the following substitutions:* Use 126280 Valve — Oil pressure relief; Remove 110568 Quant. 1	1	1	1	1	–	–	1	1	–	1	1

Fig. No.	Index Number	Part Number	Nomenclature	Per Engine	Quantity Used Per Assembly									
					4 1 4 1	4 1 6 5	4 1 8 6	4 1 8 9	4 2 3 1	4 1 7 8	4 1 7 6	4 1 8 9	4 1 6 5	4 1 7 8
					1	2	2	5	9	6	9	5	3	3
					1	6	2	1	0	0	6	3	1	6
			126285 Screw — Oil pressure relief valve adjusting 65853 1											
			Screw 65853 used with valve 110568 can be reworked to 126285 by plugging the breather hole in the head.											
9, 10, 11	1823	126280	VALVE—Oil pressure relief (late type).. *126280 has oil vent holes in the piston end and is used with screw 126285.*	1	1	1	1	–	1	1	1	–	1	1
		5D39	BALL—Oil pressure relief valve.....	1	–	–	–	1	–	–	–	1	–	–
9, 10, 11	1825	110507	SPRING—Oil pressure relief valve (nine working coils).....	1	1	1	1	–	1	1	1	–	1	1
		27570	SPRING—Oil pressure relief valve (eight working coils).....	1	–	–	–	1	–	–	–	1	–	–
		@ 65853	SCREW—Oil pressure relief valve adjusting (.84 in. long) (early type). *65853 has a breather hole drilled in the head and is used with valve 110568.*	1	1	1	1	–	–	1	1	–	1	1
			For replacement, make the following substitutions:											
			Use Description Remove Quant.											
			126280 Valve — Oil pressure relief 110568 1											
			126285 Screw — Oil pressure relief valve adjusting 65853 1											
9, 10, 11	1827	126285	SCREW—Oil pressure relief valve adjusting (.84 in. long) (late type)..	1	1	1	1	–	1	1	1	–	1	1
		27273	SCREW—Oil pressure relief valve adjusting (1.25 in. long)..... *27273 does not have a breather hole drilled in the head and is used with ball 5D39.*	1	–	–	–	1	–	–	–	1	–	
9, 10, 11	1829	65855	NUT—Oil pressure relief valve adjusting screw lock (1.375 in. hex head)...	1	1	1	1	–	1	1	1	–	1	1
		27568	NUT—Oil pressure relief valve adjusting screw lock (1.000 in. hex head)...	1	–	–	–	1	–	–	–	1	–	–
9, 10, 11	1831	65852	CAP—Oil pressure relief valve (1.10 in. high).....	1	1	1	1	–	1	1	1	–	1	1
		27569	CAP—Oil pressure relief valve (1.312 in. high).....	1	–	–	–	1	–	–	–	1	–	–
9, 10, 11	1833	65858	WASHER—Oil pressure relief valve cap and nut.....	2	2	2	2	–	2	2	2	–	2	2
		23D43	GASKET—Oil pressure relief valve cap and nut.....	2	–	–	–	2	–	–	–	2	–	–
		114644	PLUG—Oil pump check valve substituting.....	1	–	1	–	–	–	–	1	–	1	–
9, 10, 11	1835	66450	VALVE—Oil pump check.....	1	1	–	1	1	1	1	–	1	–	1
9, 10, 11	1837	66453	RING—Oil pump check valve oil seal..	1	1	–	1	1	1	1	–	1	–	1
9, 10, 11	1839	68865	SPRING—Oil pump check valve.....	1	1	–	1	1	1	1	–	1	–	1
9, 10, 11	1841	66451	RETAINER—Oil pump check valve or substituting plug.....	1	1	1	1	1	1	1	1	1	1	1
9, 10, 11	1843	AN900-22	GASKET—Oil pump check valve or substituting plug retainer (Wright Part No. 23D23).....	1	1	1	1	1	1	1	1	1	1	1
9, 10, 11	1845	61990	GASKET—Oil pump end plate.....	1	1	1	1	1	1	1	1	1	1	1

AVIATIONS
WWW.AVIATIONS.COM

Fig. No.	Index Number	Part Number	Nomenclature — 1 2 3 4 5 6 7	Per Engine	Quantity Used Per Assembly
		4037D2	FLANGE—Oil pump inlet connection (plain hole) *Factory installed on all -95 engines.*	1	
		4037D3	FLANGE—Oil pump outlet connection (plain hole) *Factory installed on all -95 engines.*	1	
9, 10, 11	1847	4037D4	FLANGE—Oil pump inlet and outlet connection (threaded hole) *Factory installed on all engines except -95 engines.*	2	
9, 10, 11	1849	66779	GASKET—Oil pump inlet and outlet connection flange	2	
9, 10, 11	1851	AN912-10	BUSHING—Oil pump outlet connection flange (Wright Part No. 166D6) *Factory installed on all -40, -40B, -54, -60, -65, -71, -73 and -97 engines and on the following engines:* *-87* (47457 to 47466, 73172 to 73228, 79867 to 80136, 80302 to 80360, 87006 to 87532, 87560 to 87857, 88098 to 88167, 93886 to 94527, 94568 to 94577, 152491 to 152555, 152821 to 152823, 153086 to 153210, 183080 to 183146 and 189949 to 190065) *-97* (190250 to 190522)	1	
		AN912-10	BUSHING—Oil pump inlet connection flange (Wright Part No. 166D6) *Factory installed on all -40, -40B, -54 and -60 engines and on the following engines:* *-71* (45545 to 45549 and 45560) *-87* (47457 to 47466, 73172 to 73228, 79867 to 80136, 80302 to 80360, 87006 to 87532, 87560 to 87857, 88098 to 88167, 93886 to 94527, 94568 to 94577, 152491 to 152555, 152821 to 152823, 153086 to 153210, 183060 to 183146 and 189949 to 190065) *-97* (190250 to 190522)	1	
9, 10, 11	1853	4040D5	NUT—Oil pump inlet and outlet connection flange to oil pump body	6	
		@ 62024	GASKET—Oil pump (early type) *Superseded by 127746.*	1	
9, 10, 11	1855	127746	GASKET—Oil pump (late type)	1	
9, 10, 11	1857	1D4	NUT—Oil pump to supercharger rear cover	8	
9, 10, 11	1859	34D33	WASHER—Oil pump to supercharger rear cover	8	
9, 10, 11	1861	124D83	NUT—Oil pump foot to supercharger rear cover	1	
9, 10, 11	1863	27D159	WASHER—Oil pump foot to supercharger rear cover	1	

AVIADGS
WWW.AVIADGS.COM

Fig. No.	Index Number	Part Number	Nomenclature 1 2 3 4 5 6 7	Units Per Assy—Model R1820 -40	-40B	-54	-60	-65	-71	-73	-87	-95	-97

EXTERNAL OIL SUCTION TUBES (OIL SUMP TO OIL PUMP)

For engines with a 1.125 in. long connection on the oil sump strainer.

Parts listed in this group were factory installed on -40 engines 45932 to 45934.

		114532	TUBE—External oil suction, front	1	–	–	–	–	–	–	–	–	–
		115029	TUBE—External oil suction, rear	1	–	–	–	–	–	–	–	–	–
	@	2058D33	HOSE—External oil suction tube. *Superseded by 129014.*	3	–	–	–	–	–	–	–	–	–
		129014	HOSE—External oil suction tube	3	–	–	–	–	–	–	–	–	–
		4019D2	CLAMP—External oil suction tube hose	6	–	–	–	–	–	–	–	–	–
	@	417719	CLAMP ASSEMBLY—External oil suction tube, front. *Factory installed on all engines.*	1	–	–	–	–	–	–	–	–	–

For replacement, make the following substitutions:

Use	Description	Remove	Quant.
421903	*Clamp Assembly—External oil suction tube, front*	*417719*	*1*
34D162	*Washer — External oil suction tube clamp*		*4*
3D6	*Bolt—External oil suction tube clamp*	*3D23*	*2*

		421903	CLAMP ASSEMBLY—External oil suction tube, front. *Not factory installed on any engines.*	1	–	–	–	–	–	–	–	–	–

421903 supersedes and is supplied for replacement of 417719.

		34D162	WASHER—External oil suction tube clamp. *Used with clamp assembly 421903.*	4	–	–	–	–	–	–	–	–	–
		3D23	BOLT—External oil suction tube clamp (.68 in. long). *Used with clamp assembly 417719.*	2	–	–	–	–	–	–	–	–	–
		3D6	BOLT—External oil suction tube clamp (.781 in. long). *Used with clamp assembly 421903.*	2	–	–	–	–	–	–	–	–	–
		4040D4	NUT—External oil suction tube clamp	2	–	–	–	–	–	–	–	–	–
		115031	CLIP—External oil suction tube	1	–	–	–	–	–	–	–	–	–
		3D23	BOLT—External oil suction tube clip	2	–	–	–	–	–	–	–	–	–
		4040D4	NUT—External oil suction tube clip	2	–	–	–	–	–	–	–	–	–

Parts listed in this group were factory installed on all -40B, -54 and -60 engines and on the following engines having a .250 in. long connection on the oil sump strainer:

-40 (94528 to 94567, 152790 to 152799, 152818 to 152820 and 152854 to 152943)

-65 (47073 to 47172, 47248 to 47272 and 47376 to 47456)

-71 (41442, 41443, 41469 to 41486, 41510 to 41514, 45545 to 45549, 45560, 152629 to 152667, 152772 to 152787, 152802 to 152805, 152810 to 152817, 152824 to 152839, 152842 to 152853 and 152944 to 153085)

AVIATORS
WWW.AVIATORS.COM

Fig. No.	Index Number	Part Number	Nomenclature 1 2 3 4 5 6 7	Units Per Assy—Model R1820 -40	-40B	-54	-60	-65	-71	-73	-87	-95	-97
			-87 (45457 to 47466, 73172 to 73228, 79867 to 80136, 80302 to 80360, 87006 to 87532, 87560 to 87857, 88098 to 88167, 93886 to 94527, 94568 to 94577, 152491 to 152555, 152821 to 152823, 153086 to 153210, 183060 to 183146 and 189949 to 190065) -97 (47467, 69597, 80787 to 81234, 81236 to 82306 and 190066 to 190522)										
12	2200	115882	TUBE—External oil suction, front.....	1	1	1	1	1	1	–	1	–	1
		@ 115883	TUBE—External oil suction, rear (early type)... *Superseded by 120123.*	1	1	1	1	1	1	–	1	–	1
12	2202	120123	TUBE—External oil suction, rear (late type)...	1	1	1	1	1	1	–	1	–	1
12	2204	115750	ADAPTER—External oil suction tube (at sump end).....	1	1	1	1	1	1	–	1	–	1
12	2206	115748	PLUG—External oil suction tube adapter.....	1	1	1	1	1	1	–	1	–	1
12	2208	AN900-18	GASKET—External oil suction tube adapter plug (Wright Part No. 23D2).....	2	2	2	2	2	2	–	2	–	2
		@ 2058D33	HOSE—External oil suction tube to oil sump adapter and oil pump connection..... *Superseded by 129014.*	2	2	2	2	2	2	–	2	–	2
12	2210	129014	HOSE—External oil suction tube to oil sump adapter and oil pump connection.....	2	2	2	2	2	2	–	2	–	2
12	2212	2058D80	HOSE—Front external oil suction tube to rear external oil suction tube connection.....	1	1	1	1	1	1	–	1	–	1
12	2214	FB14	CLAMP—External oil suction tube hose (Wittek Manufacturing Company) (Wright Part No. 5047D14).....	6	6	6	6	6	6	–	6	–	6

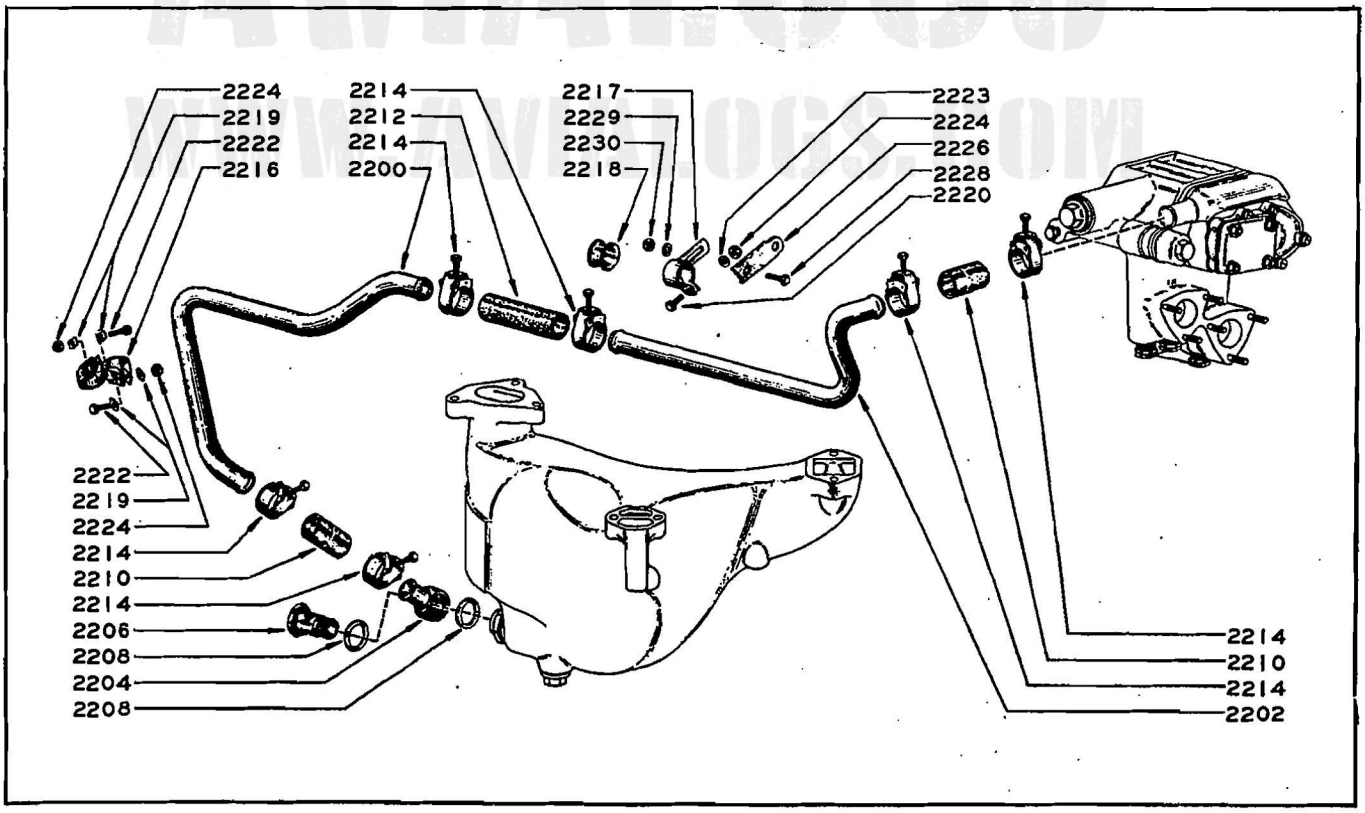

Numbers shown are index numbers and are numerically arranged in the Group Assembly Parts List

Figure 12—External Oil Suction Tubes

Fig. No.	Index Number	Part Number	Nomenclature 1 2 3 4 5 6 7	Units Per Assy—Model R1820 -40	-40B	-54	-60	-65	-71	-73	-87	-95	-97
		@ 417719	CLAMP ASSEMBLY—External oil suction tube, front..... *Factory installed on all -40, -40B, -60, -65, -71, -87 and -97 engines and on -54 engines 86727 to 86803.* *For replacement, make the following substitutions:* Use: *421903* Description: *Clamp Assembly—External oil suction tube, front* Remove: *417719* Quant.: *1* Use: *34D162* Description: *Washer — External oil suction tube clamp* Quant.: *4* Use: *3D6* Description: *Bolt—External oil suction tube clamp* Remove: *3D23* Quant.: *2*	1	1	1	1	1	1	–	1	–	1
12	2216	421903	CLAMP ASSEMBLY—External oil suction tube, front..... *Factory installed on all -54 engines except 86727 to 86803.*	1	1	1	1	1	1	–	1	–	1
		@ 417868	CLAMP AND BRACKET ASSEMBLY—External oil suction tube, rear..... *Factory installed on all -40, -40B, -60, -65, -71, -87 and -97 engines and on -54 engines 86727 to 86818.* *Superseded by 128564 and one of 128563.*	1	1	1	1	1	1	–	1	–	1
		@ 126942	CLAMP AND BRACKET—External oil suction tube, rear..... *Factory installed on -54 engines 86819 to 86866 and 429167 to 429293.* *Superseded by 128564 and one of 128563.*	–	–	1	–	–	–	–	–	–	–
12	2217	128564	CLAMP AND BRACKET—External oil suction tube, rear..... *Factory installed on the following engines:* *-54* (429294 to 429376 and 452267 to 452378)	1	1	1	1	1	1	–	1	–	1
12	2218	128563	LINER—External oil suction tube rear clamp and bracket..... *Used with clamp and bracket 128564.*	1	1	1	1	1	1	–	1	–	1
12	2219	34D162	WASHER—External oil suction tube clamp.... *Used with clamp 421903.*	4	4	4	4	4	4	–	4	–	4
12	2220	3D23	BOLT—External oil suction tube clamp (.68 in. long)..... *Quantities used:* *With clamp 128564—one unit* *With assembly 417719—two units* *With assembly 417868—one unit.*	#	#	#	#	#	#	–	#	–	#
12	2222	3D6	BOLT—External oil suction tube clamp (.781 in. long)..... *Used with clamp 421903.*	2	2	2	2	2	2	–	2	–	2
12	2223	34D51	WASHER—External oil suction tube rear clamp.	1	1	1	1	1	1	–	1	–	1
12	2224	4040D4	NUT—External oil suction tube clamp.....	3	3	3	3	3	3	–	3	–	3
12	2226	116116	EXTENSION—External oil suction tube bracket	1	1	1	1	1	1	–	1	–	1
12	2228	3D23	BOLT—External oil suction tube extension to clamp.....	1	1	1	1	1	1	–	1	–	1
12	2229	34D51	WASHER—External oil suction tube extension to clamp.....	1	1	1	1	1	1	–	1	–	1
12	2230	4040D4	NUT—External oil suction tube extension to clamp.....	1	1	1	1	1	1	–	1	–	1

AVIATIONBUFFS
WWW.AVIATIONBUFFS.COM

Fig. No.	Index Number	Part Number	Nomenclature 1 2 3 4 5 6 7	Units Per Assy—Model R1820 -40 -40B -54 -60 -65 -71 -73 -87 -95 -97

OIL FILTER (SUPERCHARGER REAR HOUSING)

Except where otherwise noted all of the parts listed in this group were factory installed on all -40, -40B, -65, -71, -73, -87, -95 and -97 engines and on the following engines:
-60 (47468, 47469, 73229 to 73279, 73304 to 73429, 73432 to 73914, 80137 to 80251, 80254 to 80279, 88168 to 88196, 155763 to 155817, 155824 to 155879, 156289 to 157567, 157710 to 157726, 157730 to 157737, 157746 to 157755, 157766, 157777, 157785, 157786, 157788, 157792, 157796, 157798, 157802, 157805, 157814, 157816, 157817, 157826, 157828, 157833 to 157836, 157838, 157840, 157842, 157846, 157848, 157849, 157851 to 157855, 157857 to 157863, 157865 to 157873, 157875, 157876, 157878, 157880 to 157884, 157886 to 157899, 157901 to 158074, 425536, 425779 to 425812 and 426451 to 426720)

@	10658	FILTER—Oil (Cuno) (early type) (Wright Part No. 69474).....	1	1

For replacement on Army engines, use 11210. For replacement on Navy engines, make the following substitutions:

Use	Description	Remove	Quant.
420702	*Strainer Assembly Complete—Oil*		*1*
117812	*Gasket — Oil strainer*		*1*
124D161	*Nut—Oil strainer to supercharger rear housing*		*3*
27D231	*Washer — Oil strainer to supercharger rear housing*		*3*
	Filter — Oil (Cuno) (Wright Part No. 69474)	*10658*	*1*
	Gasket—Oil filter	*26240*	*1*
	Nut—Oil filter to supercharger rear housing	*124D115*	*3*
	Washer—Oil filter to supercharger rear housing	*27D220*	*3*

@	10779	FILTER—Oil (Cuno) (intermediate type) (Wright Part No. 110029).....	1	1

For replacement on Army engines, use 11210. For replacement on Navy engines, make the following substitutions:

Use	Description	Remove	Quant.
420702	*Strainer Assembly Complete—Oil*		*1*
117812	*Gasket — Oil strainer*		*1*
124D161	*Nut—Oil strainer to supercharger rear housing*		*3*
27D231	*Washer — Oil strainer to supercharger rear housing*		*3*
	Filter — Oil (Cuno) (Wright Part No. 110029)	*10779*	*1*

AVIALOGS
WWW.AVIALOGS.COM

Fig. No.	Index Number	Part Number	Nomenclature	Units Per Assy—Model R1820 -40	-40B	-54	-60	-65	-71	-73	-87	-95	-97
			Gasket—Oil filter 26240 1										
			Nut—Oil filter to supercharger rear housing 124D115 3										
			Washer—Oil filter to supercharger rear housing 27D220 3										
13	2250	11210	FILTER—Oil (Cuno) (late type) (Wright Part No. 113602).....	1	1	–	1	1	1	1	1	1	1
			11210 is no longer supplied for Navy engines. For replacement, make the following substitutions:										
			Use / Description / Remove / Quant.										
			420702 Strainer Assembly Complete—Oil 1										
			117812 Gasket — Oil strainer 1										
			124D161 Nut—Oil strainer to supercharger rear housing 3										
			27D231 Washer — Oil strainer to supercharger rear housing 3										
			Filter — Oil (Cuno) (Wright Part No. 113602) 11210 1										
			Gasket—Oil filter 26240 1										
			Nut—Oil filter to supercharger rear housing 124D115 3										
			Washer—Oil filter to supercharger rear housing 27D220 3										

AVIALOGS
WWW.AVIALOGS.COM

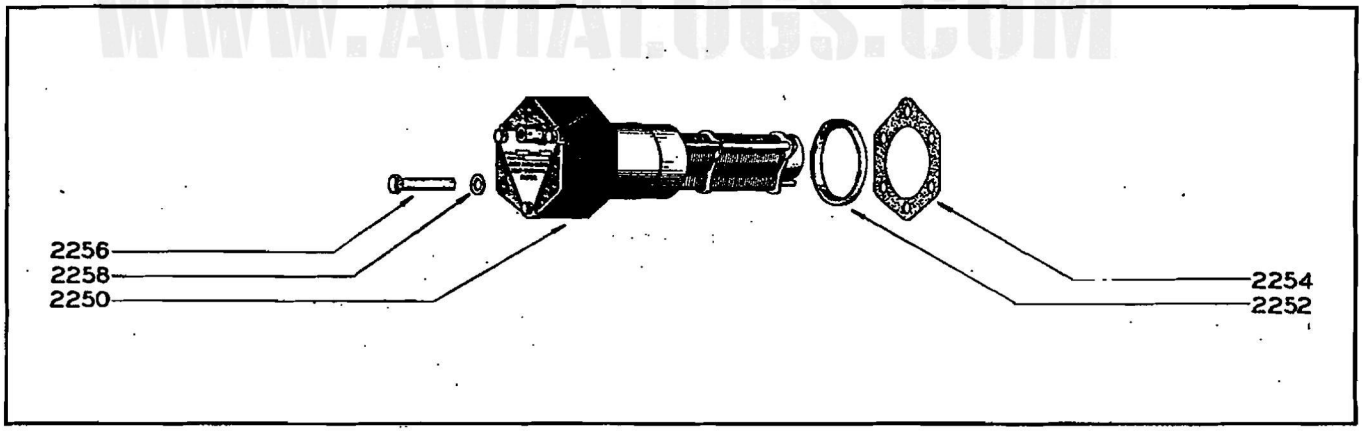

Numbers shown are index numbers and are numerically arranged in the Group Assembly Parts List

Figure 13—Oil Filter (Supercharger Rear Housing)

13	2252	116964	RING—Oil filter packing..... *Used with supercharger rear covers 415485, 420161, 421567 and 421568.*	1	1	–	1	1	1	1	1	1	1
13	2254	26240	GASKET—Oil filter.....	1	1	–	1	1	1	1	1	1	1
13	2256	124D115	NUT—Oil filter to supercharger rear housing.....	3	3	–	3	3	3	3	3	3	3
13	2258	27D220	WASHER—Oil filter to supercharger rear housing	3	3	–	3	3	3	3	3	3	3

Fig. No.	Index Number	Part Number	Nomenclature 1 2 3 4 5 6 7	Units Per Assy—Model R1820 -40	-40B	-54	-60	-65	-71	-73	-87	-95	-97

OIL STRAINER (SUPERCHARGER REAR HOUSING)

Except where otherwise noted all of the parts listed in this group were factory installed on all -54 engines and on the following engines:
-60 (80252, 80253, 157568 to 157709, 157727 to 157729, 157738 to 157745, 157756 to 157765, 157767 to 157776, 157778 to 157784, 157787, 157789 to 157791, 157793 to 157795, 157797, 157799 to 157801, 157803, 157804, 157806 to 157813, 157815, 157818 to 157825, 157827, 157829 to 157832, 157837, 157839, 157841, 157843 to 157845, 157847, 157850, 157856, 157864, 157874, 157877, 157879, 157885, 157900, 158075 to 158093, 183147 to 183464, 425321 to 425535, 425537 to 425778, 425813 to 426450 and 454477 to 455407)

		@ 420702N2	STRAINER ASSEMBLY COMPLETE—Oil (early type).....	–	–	1	1	–	–	–	–	–	–

For replacement on Navy engines, use 420702. For replacement on Army engines, make the following substitutions:

Use	Description	Remove	Quant.
11210	*Filter — Oil (Cuno) (Wright Part No. 113602)*		*1*
26240	*Gasket—Oil filter*		*1*
124D115	*Nut—Oil filter to supercharger rear housing*		*3*
27D220	*Washer—Oil filter to supercharger rear housing*		*3*
	Strainer Assembly Complete—Oil	*420702N2*	*1*
	Gasket — Oil strainer	*117812*	*1*
	Nut—Oil strainer to supercharger rear housing	*124D161*	*3*
	Washer — Oil strainer to supercharger rear housing	*27D231*	*3*

		420702	STRAINER ASSEMBLY COMPLETE—Oil (late type).....	1	1	1	1	–	–	–	1	–	–

420702 supersedes 420702N1 installed on some engines.

420702N1 had the relief valve ball, spring and disk held in place by a circlet 2019D3 and these parts were serviceable.

420702 does not have a circlet and the relief valve ball, spring and disk are held in place by having the relief valve body spun over the disk.

For replacement of these parts, it will be necessary to order screen assembly 420704.

14	2275	420704	SCREEN ASSEMBLY COMPLETE—Oil strainer.....	1	1	1	1	–	–	–	1	–	–
		* 420705	RETAINER AND PIN ASSEMBLY—Oil strainer screen.....	1	1	1	1	–	–	–	1	–	–
		* 117438	RETAINER—Oil strainer screen..	1	1	1	1	–	–	–	1	–	–
		* 2037D59	PIN—Oil strainer cover aligning...	1	1	1	1	–	–	–	1	–	–
		* 117464	SCREEN—Oil strainer.....	1	1	1	1	–	–	–	1	–	–
		* 117439	SLEEVE—Oil strainer screen supporting	1	1	1	1	–	–	–	1	–	–
		* 117463	BODY—Oil strainer relief valve.....	1	1	1	1	–	–	–	1	–	–

AVIA.OGS
WWW.AVIA.OGS.COM

Fig. No.	Index Number	Part Number	Nomenclature 1 2 3 4 5 6 7	Units Per Assy—Model R1820 -40 -40B -54 -60 -65 -71 -73 -87 -95 -97

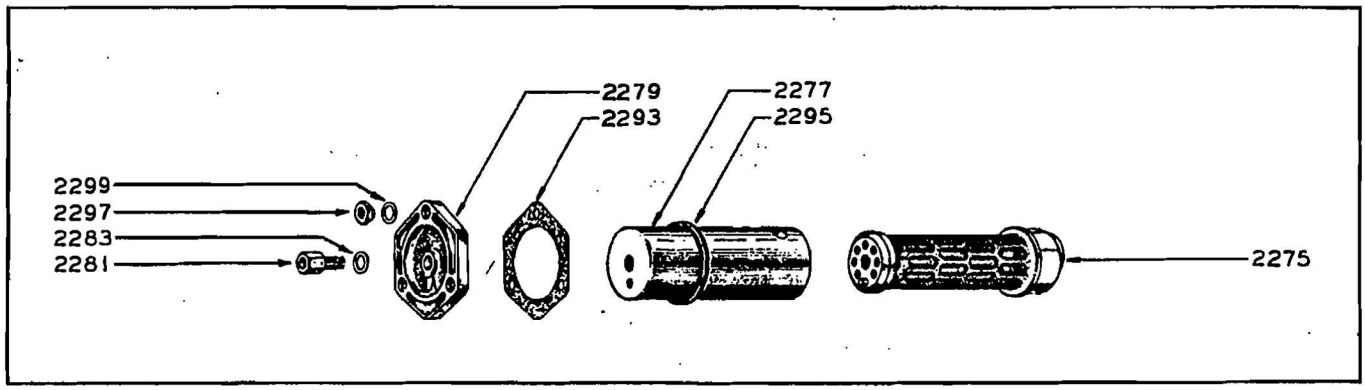

Numbers shown are index numbers and are numerically arranged in the Group Assembly Parts List

Figure 14—Oil Strainer (Supercharger Rear Housing)

		* 120239	EXTENSION—Oil strainer pilot	1	1	1	1	–	–	–	1	–	–
		* 5D39	BALL—Oil strainer relief valve	1	1	1	1	–	–	–	1	–	–
		* 117467	SPRING—Oil strainer relief valve ball. *Supersedes 117461.*	1	1	1	1	–	–	–	1	–	–
		* 2059D25	DISK—Oil strainer relief valve ball spring retaining	1	1	1	1	–	–	–	1	–	–
14	2277	120236	HOUSING—Oil strainer	1	1	1	1	–	–	–	1	–	–
14	2279	120237	COVER—Oil strainer	1	1	1	1	–	–	–	1	–	–
		@ 35D9	SCREW—Oil strainer cover to screen (early type) *Superseded by 130321.*	1	1	1	1	–	–	–	1	–	–
14	2281	130321	SCREW—Oil strainer cover to screen (late type)	1	1	1	1	–	–	–	1	–	–
14	2283	27D168	WASHER—Oil strainer cover to screen	1	1	1	1	–	–	–	1	–	–
14	2293	117812	GASKET—Oil strainer	1	1	1	1	–	–	–	1	–	–
14	2295	116964	RING—Oil strainer packing	1	1	1	1	–	–	–	1	–	–
14	2297	124D161	NUT—Oil strainer to supercharger rear housing	3	3	3	3	–	–	–	3	–	–
14	2299	27D231	WASHER—Oil strainer to supercharger rear housing	3	3	3	3	–	–	–	3	–	–

CAM AND CAM DRIVE

		@ 68383	CAM—(early type) *Superseded by 114113.*	1	–	–	1	–	1	1	1	1	–
15	2300	114113	CAM—(late type)	1	1	1	1	1	1	1	1	1	1
		@ 69272	BEARING—Cam (early type) *Superseded by 116105.*	1	–	–	–	–	1	1	–	1	–
15	2302	116105	BEARING—Cam (late type)	1	1	1	1	1	1	1	1	1	1
15	2304	69273	RING—Cam bearing lock	1	1	1	1	1	1	1	1	1	1
		@ 411703	SUPPORT MACHINING ASSEMBLY—Intermediate cam drive gear and pinion (early type) *Superseded by 414997.*	1	–	–	–	–	–	–	–	1	–
15	2306	414997	SUPPORT MACHINING ASSEMBLY—Intermediate cam drive gear and pinion (late type)	1	1	1	1	1	1	1	1	1	1
		* 68378	SUPPORT—Intermediate cam drive gear and pinion *Part of assembly 411703.*	1	–	–	–	–	–	–	–	1	–
		* 112515	SUPPORT—Intermediate cam drive gear and pinion *Part of assembly 414997.*	1	1	1	1	1	1	1	1	1	1

Fig. No.	Index Number	Part Number	Nomenclature 1 2 3 4 5 6 7	Units Per Assy—Model R1820 -40	-40B	-54	-60	-65	-71	-73	-87	-95	-97
15	2308	102D33	PLUG—Intermediate cam drive gear and pinion support oil line	1	1	1	1	1	1	1	1	1	1
15	2310	68379	BUSHING—Intermediate cam drive gear and pinion	1	1	1	1	1	1	1	1	1	1
15	2312	69071	SPACER—Intermediate cam drive gear and pinion support	1	1	1	1	1	1	1	1	1	1
15	2314	35D32	SCREW—Intermediate cam drive gear and pinion support to crankcase main section front bearing ring *35D32 supersedes and is supplied for replacement of 35D7.*	8	8	8	8	8	8	8	8	8	8
		68386	GEAR—Intermediate cam drive *Factory installed on -65 engines 29898 to 29919.* *68386 is 2.907 in. overall in length.*	–	–	–	–	1	–	–	–	–	–
15	2316	112315	GEAR—Intermediate cam drive *Factory installed on all engines except -65 engines 29898 to 29919.* *112315 is 2.877 in. overall in length.*	1	1	1	1	1	1	1	1	1	1
		68381	PINION—Intermediate cam drive gear *Factory installed on -65 engines 29898 to 29919.* *68381 is 1.08 in. overall in length.*	–	–	–	–	1	–	–	–	–	–
15	2318	112316	PINION—Intermediate cam drive gear *Factory installed on all engines except -65 engines 29898 to 29919.* *112316 is 1.05 in. overall in length.*	1	1	1	1	1	1	1	1	1	1
15	2320	68380	SPACER—Intermediate cam drive gear	1	1	1	1	1	1	1	1	1	1
		@ 68400	BOLT—Intermediate cam drive gear and pinion retaining (early type) *Superseded by 112313.*	1	–	–	–	–	–	–	–	1	–

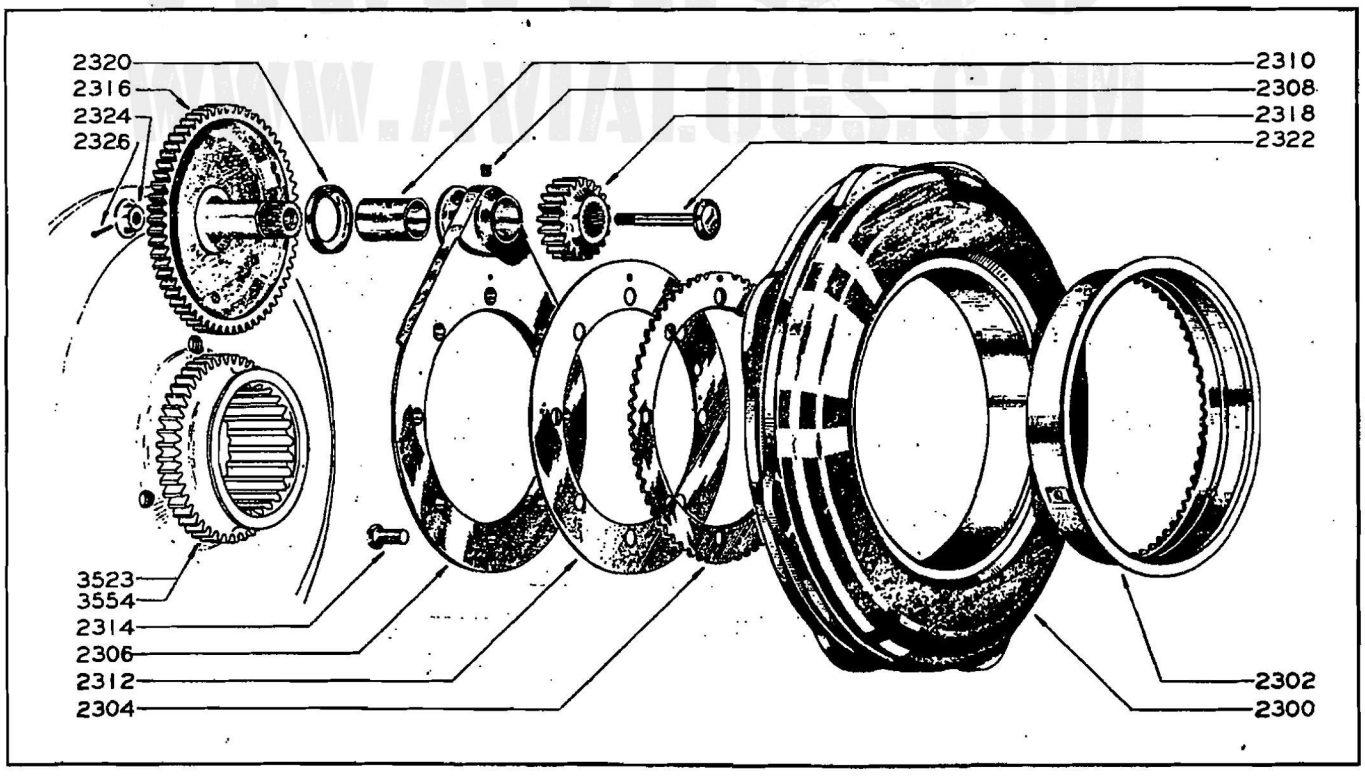

Numbers shown are index numbers and are numerically arranged in the Group Assembly Parts List

Figure 15—Cam and Cam Drive

Fig. No.	Index Number	Part Number	Nomenclature 1 2 3 4 5 6 7	Units Per Assy—Model R1820 -40	-40B	-54	-60	-65	-71	-73	-87	-95	-97
15	2322	112313	BOLT—Intermediate cam drive gear and pinion retaining (late type).....	1	1	1	1	1	1	1	1	1	1
15	2324	124D107	NUT—Intermediate cam drive gear and pinion retaining.....	1	1	1	1	1	1	1	1	1	1
15	2326	58D3	COTTER PIN—Intermediate cam drive gear and pinion retaining nut.....	1	1	1	1	1	1	1	1	1	1

IMPELLER AND IMPELLER DRIVE

IMPELLER AND IMPELLER SHAFT

16	2400	68585	IMPELLER—Supercharger.....	1	1	1	1	1	1	1	1	1	1
		412379	SHAFT AND BUSHING MACHINING ASSEMBLY—Impeller (single-speed).....	–	–	–	–	1	1	1	–	–	1
		@ 412381	SHAFT AND BUSHING MACHINING ASSEMBLY—Impeller (plate type clutch)...	1	–	–	–	–	–	–	–	1	–

Factory installed on all -95 engines and on the following engines:
-40 (31651 to 31674, 31676 to 31722 and 45777 to 45928)

412381 has a shouldered and splined rear bushing and is used in conjunction with a splined washer.

For replacement, make the following substitutions:

Use	Description	Remove	Quant.
415258	*Shaft and Bushing Machining Assembly—Impeller*	412381	1
	Washer — Impeller shaft retainer centering ring (splined)	*69164*	1

AVIALOGS
WWW.AVIALOGS.COM

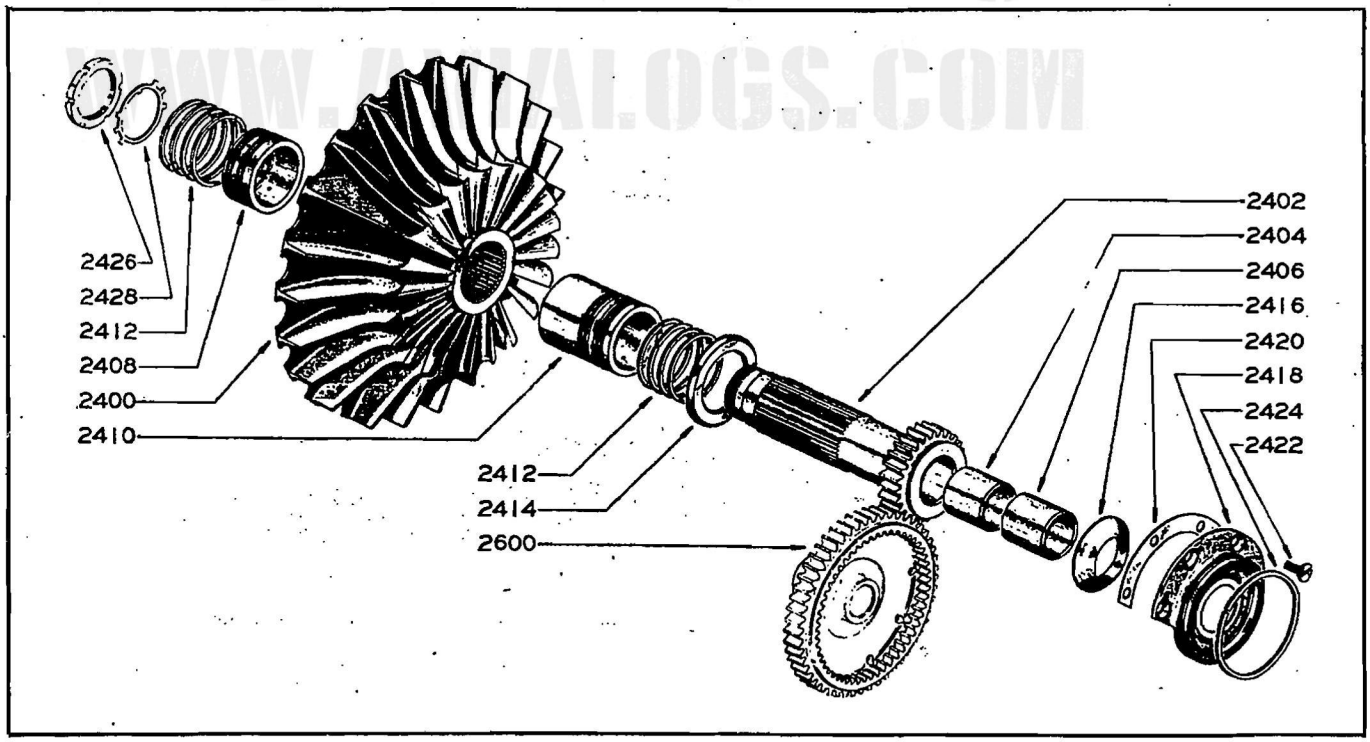

Numbers shown are index numbers and are numerically arranged in the Group Assembly Parts List

Figure 16—Impeller and Impeller Shaft

Fig. No.	Index Number	Part Number	Nomenclature 1 2 3 4 5 6 7	Units Per Assy—Model R1820 -40	-40B	-54	-60	-65	-71	-73	-87	-95	-97
		415258	SHAFT AND BUSHING MACHINING ASSEMBLY—Impeller (plate type clutch)... *Factory installed on -40 engines 45879 to 45898. 415258 has a plain rear bushing and a shouldered washer installed in the anti-propeller end.*	1	–	–	–	–	–	–	–	1	–
16	2402	415006	SHAFT AND BUSHING MACHINING ASSEMBLY—Impeller (roller type clutch).. *Factory installed on all -40B, -54, -60 and -87 engines and on the following engines: -40* (45899 to 45928, 45932 to 45934, 94528 to 94567, 152790 to 152799, 152818 to 152820 and 152854 to 152943)	1	1	1	1	–	–	–	1	–	–
		* 69207	SHAFT—Impeller..... *Part of assembly 412379.*	–	–	–	–	1	1	1	–	–	1
		* 64080	SHAFT—Impeller..... *Part of assemblies 412381 and 415258.*	1	–	–	–	–	–	–	–	1	–
		* 112528	SHAFT—Impeller..... *Part of assembly 415006.*	1	1	1	1	–	–	–	1	–	–
16	2404	61235	BUSHING—Impeller shaft, front.....	1	1	1	1	1	1	1	1	1	1
16	2406	65161	BUSHING—Impeller shaft, rear (plain)..... *Part of assemblies 412379, 415006 and 415258.*	1	1	1	1	1	1	1	1	1	1
		69163	BUSHING—Impeller shaft, rear (splined)... *Part of assembly 412381.*	1	–	–	–	–	–	–	–	1	–
		69781	WASHER—Impeller shaft retainer centering ring (shouldered)..... *Part of assembly 415258.*	1	–	–	–	–	–	–	–	1	–
16	2408	29250	SLEEVE—Impeller shaft oil seal, front.....	1	1	1	1	1	1	1	1	1	1
16	2410	68369	SLEEVE—Impeller shaft oil seal, rear.....	1	1	1	1	1	1	1	1	1	1
16	2412	64870	RING—Impeller oil seal.....	8	8	8	8	8	8	8	8	8	8
		64870Y1	RING—Same as 64870 except .005 in. OS width, standard OD.....	AR	AR	AR	AR	AR	AR	AR	AR	AR	AR
		64870Y2	RING—Same as 64870 except .010 in. OS width, standard OD.....	AR	AR	AR	AR	AR	AR	AR	AR	AR	AR
		64870Y10	RING—Same as 64870 except standard width, .005 in. OS OD.....	AR	AR	AR	AR	AR	AR	AR	AR	AR	AR
		64870Y11	RING—Same as 64870 except .005 in. OS width, .005 in. OS OD.....	AR	AR	AR	AR	AR	AR	AR	AR	AR	AR
		64870Y12	RING—Same as 64870 except .010 in. OS width, .005 in. OS OD.....	AR	AR	AR	AR	AR	AR	AR	AR	AR	AR
		64870Y20	RING—Same as 64870 except standard width, .010 in. OS OD.....	AR	AR	AR	AR	AR	AR	AR	AR	AR	AR
		64870Y21	RING—Same as 64870 except .005 in. OS width, .010 in. OS OD.....	AR	AR	AR	AR	AR	AR	AR	AR	AR	AR
		64870Y22	RING—Same as 64870 except .010 in. OS width, .010 in. OS OD.....	AR	AR	AR	AR	AR	AR	AR	AR	AR	AR
16	2414	62864	WASHER—Impeller shaft gear.....	1	1	1	1	1	1	1	1	1	1
		69164	WASHER—Impeller shaft retainer centering ring (splined)..... *Used with impeller shaft assembly 412381.*	1	–	–	–	–	–	–	–	1	–
16	2416	62862	RING—Impeller shaft thrust.....	1	1	1	1	1	1	1	1	1	1
16	2418	66373	RETAINER—Impeller shaft.....	1	1	1	1	1	1	1	1	1	1
16	2420	25888	SHIM—Supercharger impeller adjusting.....	1	1	1	1	1	1	1	1	1	1
16	2422	56D3	SCREW—Impeller shaft retainer to supercharger rear housing.....	5	5	5	5	5	5	5	5	5	5
16	2424	66374	RING—Impeller shaft retainer oil seal.....	1	1	1	1	1	1	1	1	1	1
		66374Y10	RING—Same as 66374 except .005 in. OS OD....	AR	AR	AR	AR	AR	AR	AR	AR	AR	AR
		@ 61031	NUT—Impeller shaft, front..... *Factory installed on the following engines: -40* (31651 to 31674 and 31676 to 31716) *-65* (29898 to 29997) *61031 has slots .093 in. deep.*	1	–	–	–	1	–	–	–	–	–

AVIATORS WWW.AVIATORS.COM

Fig. No.	Index Number	Part Number	Nomenclature 1 2 3 4 5 6 7	Units Per Assy—Model R1820 -40	-40B	-54	-60	-65	-71	-73	-87	-95	-97
			For replacement, make the following substitutions: Use: *113148* Description: *Nut — Impeller shaft, front* Remove: *61031* Quant.: *1*; Use: *2067D21* Description: *Lockwasher—Impeller shaft front nut* Remove: *2067D1* Quant.: *1*										
16	2426	113148	NUT—Impeller shaft, front..... *Factory installed on all engines except -40 engines 31651 to 31674, 31676 to 31716 and -65 engines 29898 to 29997.* *113148 has slots .137 in. deep.*	1	1	1	1	1	1	1	1	1	1
		@ 2067D1	LOCKWASHER—Impeller shaft front nut (2.313 in. OD)..... *Used with nut 61031.* *Superseded by 2067D21.*	1	–	–	–	1	–	–	–	–	–
16	2428	2067D21	LOCKWASHER—Impeller shaft front nut (2.10 in. OD)..... *Used with nut 113148.*	1	1	1	1	1	1	1	1	1	1
			IMPELLER DRIVE (SINGLE-SPEED)										
17	2460	66682	GEAR AND PINION—Impeller drive.....	–	–	–	–	1	1	1	–	–	1

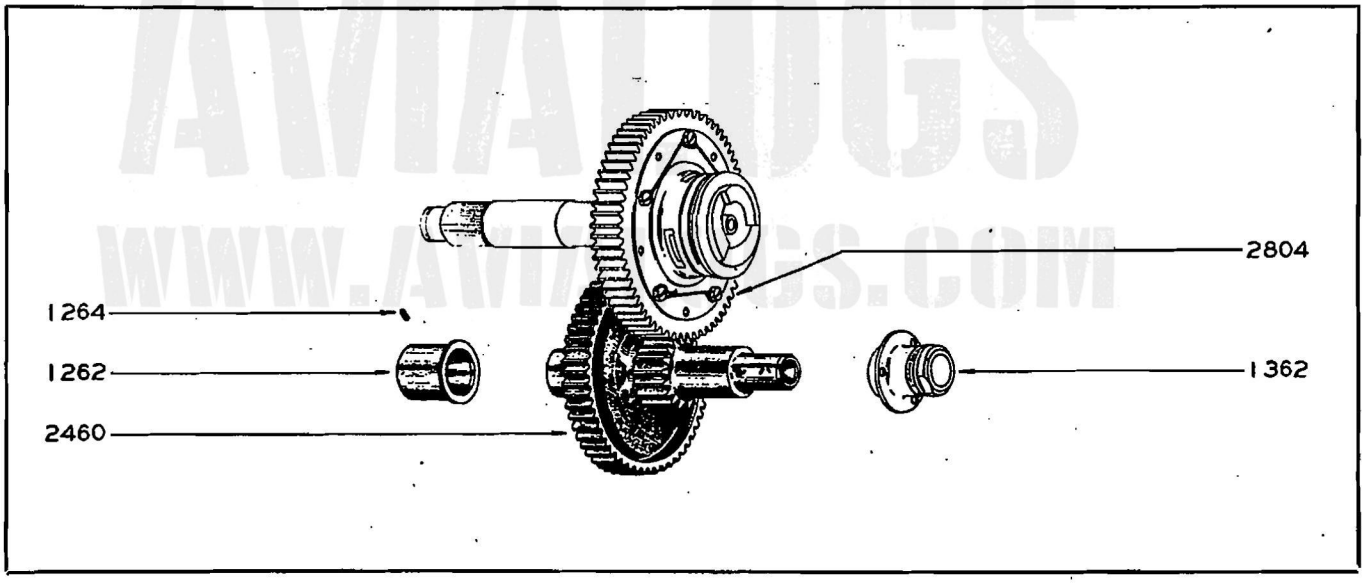

Numbers shown are index numbers and are numerically arranged in the Group Assembly Parts List

Figure 17—Impeller Drive (Single-Speed)

IMPELLER DRIVE (PLATE TYPE CLUTCH)

Except where otherwise noted all of the parts listed in this group were factory installed on all -95 engines and on the following engines:
-40 (31651 to 31674, 31676 to 31722, 45777 to 45876 and 45879 to 45898)

18	2500	62347	GEAR—Impeller shaft drive multi-plate clutch (high ratio).....	1	–	–	–	–	–	–	–	1	–
18	2502	62343	PISTON—Impeller shaft drive multi-plate clutch (high ratio).....	1	–	–	–	–	–	–	–	1	–

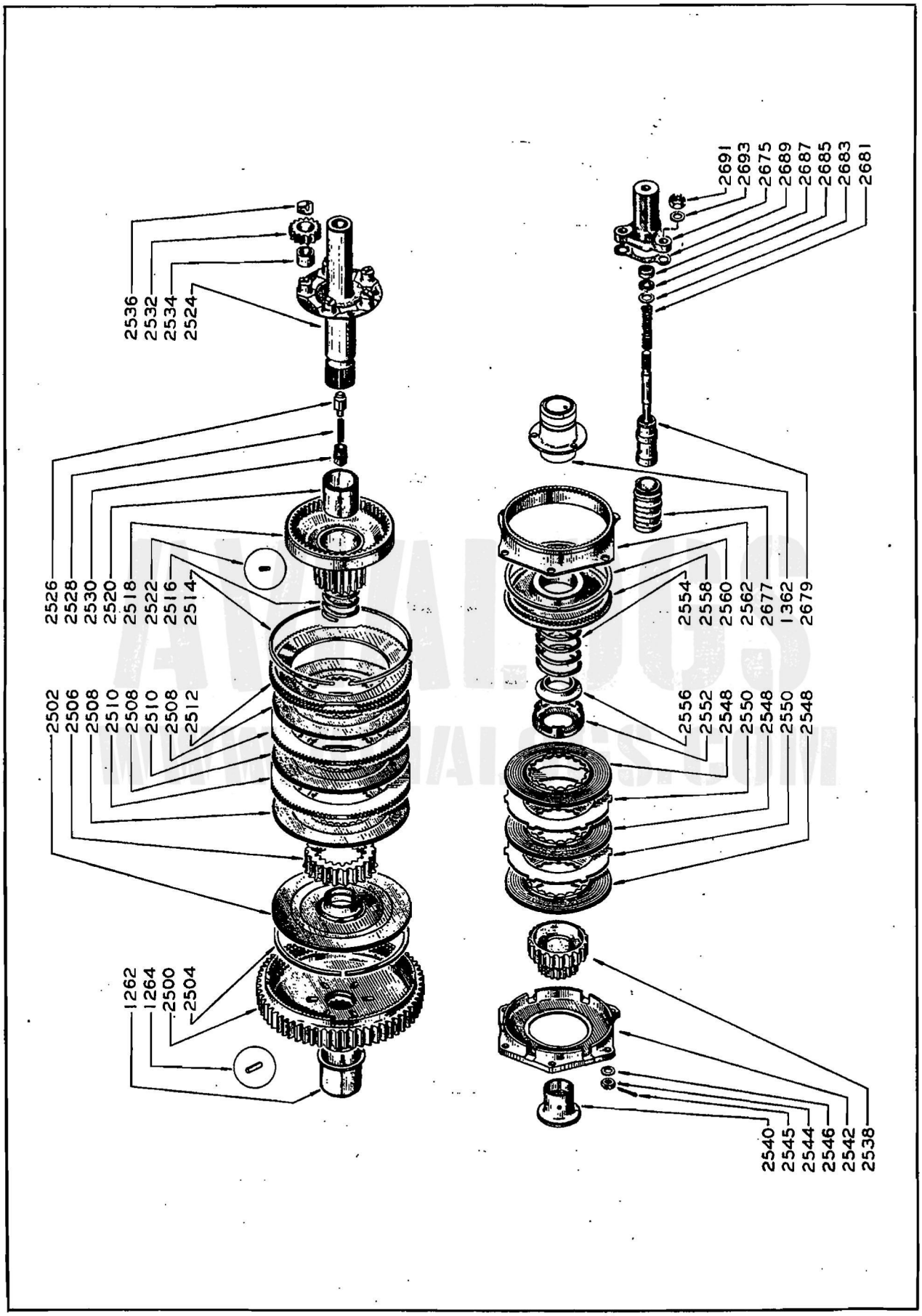

Numbers shown are index numbers and are numerically arranged in the Group Assembly Parts List

Figure 18—Impeller Drive (Plate Type Clutch)

Fig. No.	Index Number	Part Number	Nomenclature 1 2 3 4 5 6 7	Units Per Assy—Model R1820 -40	-40B	-54	-60	-65	-71	-73	-87	-95	-97
18	2504	111149	RING—Impeller shaft drive multi-plate clutch piston (high ratio)	1	–	–	–	–	–	–	–	1	–
		111149Y1	RING—Same as 111149 except .005 in. OS width, standard OD	AR	–	–	–	–	–	–	–	AR	–
		111149Y10	RING—Same as 111149 except standard width, .005 in. OS OD	AR	–	–	–	–	–	–	–	AR	–
		111149Y11	RING—Same as 111149 except .005 in. OS width, .005 in. OS OD	AR	–	–	–	–	–	–	–	AR	–
		111149Y20	RING—Same as 111149 except standard width, .010 in. OS OD	AR	–	–	–	–	–	–	–	AR	–
		111149Y21	RING—Same as 111149 except .005 in. OS width, .010 in. OS OD	AR	–	–	–	–	–	–	–	AR	–
		111149Y30	RING—Same as 111149 except standard width, .015 in. OS OD	AR	–	–	–	–	–	–	–	AR	–
		111149Y31	RING—Same as 111149 except .005 in. OS width, .015 in. OS OD	AR	–	–	–	–	–	–	–	AR	–
18	2506	65125	ADAPTER—Impeller shaft drive multi-plate clutch (high ratio)	1	–	–	–	–	–	–	–	1	–
18	2508	66266	DISC—Impeller shaft drive multi-plate clutch (high ratio)	3	–	–	–	–	–	–	–	3	–
18	2510	64992	RETAINER—Impeller shaft drive multi-plate clutch disc, inner (high ratio)	2	–	–	–	–	–	–	–	2	–
		@ 62346	RETAINER—Impeller shaft drive multi-plate clutch disc, outer (high ratio) (early type) *Superseded by 120869.*	1	–	–	–	–	–	–	–	1	–
18	2512	120869	RETAINER—Impeller shaft drive multi-plate clutch disc, outer, (high ratio) (late type)	1	–	–	–	–	–	–	–	1	–
18	2514	85D21	LOCKWIRE—Impeller shaft drive multi-plate clutch gear (high ratio) *Supersedes and supplied for replacement of 85D16.*	1	–	–	–	–	–	–	–	1	–
18	2516	61639	SPRING—Impeller clutch release (high ratio)	1	–	–	–	–	–	–	–	1	–
		@ 49718	GEAR AND BUSHING ASSEMBLY—Intermediate impeller drive (high ratio) *Factory installed on all -95 engines and on the following engines:* *-40* (31651 to 31674 and 31676 to 31722) *Superseded by 414186.*	1	–	–	–	–	–	–	–	1	–
18	2518	414186	GEAR AND BUSHING ASSEMBLY—Intermediate impeller drive (high ratio) *Factory installed on the following engines:* *-40* (45777 to 45876 and 45879 to 45898)	1	–	–	–	–	–	–	–	1	–
		* 66259	GEAR—Intermediate impeller drive (high ratio) *Part of assembly 49718.*	1	–	–	–	–	–	–	–	1	–
		* 116119	GEAR—Intermediate impeller drive (high ratio) *Part of assembly 414186.*	1	–	–	–	–	–	–	–	1	–
18	2520	66260	BUSHING—Intermediate impeller drive gear	1	–	–	–	–	–	–	–	1	–
18	2522	13D54	PIN—Intermediate impeller drive gear bushing	2	–	–	–	–	–	–	–	2	–
		410601	SHAFT ASSEMBLY COMPLETE—Intermediate impeller drive	1	–	–	–	–	–	–	–	1	–
18	2524	411004	SHAFT ASSEMBLY—Intermediate impeller drive	1	–	–	–	–	–	–	–	1	–
		* 67515	SHAFT—Intermediate impeller drive	1	–	–	–	–	–	–	–	1	–
		* 63481	PLUG—Intermediate impeller drive shaft oil distributor	1	–	–	–	–	–	–	–	1	–

AVIATIONS WWW.AVIATIONS.COM

Fig. No.	Index Number	Part Number	Nomenclature 1 2 3 4 5 6 7	Units Per Assy—Model R1820 -40	-40B	-54	-60	-65	-71	-73	-87	-95	-97
		* 13D36	PIN—Intermediate impeller drive shaft oil distributor plug	1	–	–	–	–	–	–	–	1	–
		* 12D15	PIN—Intermediate impeller drive shaft.	5	–	–	–	–	–	–	–	5	–
18	2526	63482	VALVE—Intermediate impeller drive shaft plug check	1	–	–	–	–	–	–	–	1	–
18	2528	63483	SPRING—Intermediate impeller drive shaft plug check valve	1	–	–	–	–	–	–	–	1	–
18	2530	2105D12	PLUG—Intermediate impeller drive shaft plug check valve spring *Supersedes and supplied for replacement of 4042D2.*	1	–	–	–	–	–	–	–	1	–
18	2532	66262	PINION—Intermediate impeller drive gear	5	–	–	–	–	–	–	–	5	–
18	2534	66263	BUSHING—Intermediate impeller drive gear pinion	5	–	–	–	–	–	–	–	5	–
		@ 61853	LOCK—Intermediate impeller drive gear pinion (early type) *Superseded by 115513.*	5	–	–	–	–	–	–	–	5	–
18	2536	115513	LOCK—Intermediate impeller drive gear pinion (late type)	5	–	–	–	–	–	–	–	5	–
18	2538	66264	GEAR—Intermediate impeller drive sun	1	–	–	–	–	–	–	–	1	–
18	2540	69558	BUSHING—Intermediate impeller drive sun gear	1	–	–	–	–	–	–	–	1	–
18	2542	113689	HOUSING—Impeller drive multi-plate clutch (low ratio)	1	–	–	–	–	–	–		1	–
18	2544	1D1	NUT—Impeller drive multi-plate clutch housing to supercharger rear cover	6	–	–	–	–	–	–	–	6	–
18	2545	57D3	COTTER PIN—Impeller drive multi-plate clutch housing to supercharger rear cover nut	6	–	–	–	–	–	–	–	6	–
18	2546	34D51	WASHER—Impeller drive multi-plate clutch housing to supercharger rear cover	6	–	–	–	–	–	–	–	6	–
		@ 66267	DISC—Impeller drive multi-plate clutch (low ratio) (early type) *Superseded by 113077.*	3	–	–	–	–	–	–	–	–	–
		@ 113606	DISC—Impeller drive multi-plate clutch (low ratio) (intermediate type) *Superseded by 113077.*	3	–	–	–	–	–	–	–	3	–
18	2548	113077	DISC—Impeller drive multi-plate clutch (low ratio) (late type)	3	–	–	–	–	–	–	–	3	–
18	2550	64994	PLATE—Impeller drive multi-plate clutch (low ratio)	2	–	–	–	–	–	–	–	2	–
18	2552	64952	WASHER—Two-speed clutch thrust	1	–	–	–	–	–	–	–	1	–
		@ 63612	SPRING—Impeller clutch release (early type) *Superseded by 126349.*	1	–	–	–	–	–	–	–	1	–
		@ 115613	SPRING—Impeller clutch release (intermediate type) *Superseded by 126349.*	1	–	–	–	–	–	–	–	1	–
18	2554	126349	SPRING—Impeller clutch release (late type)	1	–	–	–	–	–	–	–	1	–
18	2556	67680	SPACER—Intermediate impeller drive shaft	1	–	–	–	–	–	–	–	1	–
18	2558	412064	PISTON AND LOCK ASSEMBLY—Impeller drive multi-plate clutch (low ratio)	1	–	–	–	–	–	–	–	1	–
		* 66368	PISTON—Impeller drive multi-plate clutch (low ratio)	1	–	–	–	–	–	–	–	1	–
		* 64987	LOCK—Two-speed clutch thrust washer	1	–	–	–	–	–	–	–	1	–
18	2560	63276	RING—Impeller drive multi-plate clutch piston (low ratio)	1	–	–	–	–	–	–	–	1	–
		63276Y20	RING—Same as 63276 except standard ID, .010 in. OS OD	AR	–	–	–	–	–	–	–	AR	–
18	2562	113690	SLEEVE—Impeller drive multi-plate clutch (low ratio)	1	–	–	–	–	–	–	–	1	–

AVIATIONGS
WWW.AVIATIONGS.COM

Fig. No.	Index Number	Part Number	Nomenclature 1 2 3 4 5 6 7	Units Per Assy—Model R1820 -40	-40B	-54	-60	-65	-71	-73	-87	-95	-97
			IMPELLER DRIVE (ROLLER TYPE CLUTCH)										
			Except where otherwise noted all of the parts listed in this group were factory installed on all -40B, -54, -60 and -87 engines and on the following engines:										
			-40 (45899 to 45928, 45932 to 45934, 94528 to 94567, 152790 to 152799, 152818 to 152820 and 152854 to 152943)										
		415009	GEAR AND BUSHING ASSEMBLY—Impeller shaft drive	1	1	1	1	–	–	–	1	–	–
			Factory installed on all -40, -40B, and -87 engines and on the following engines:										
			-54 (86727 to 86803)										
			-60 (47468, 47469, 73229 to 73279, 73304 to 73429, 73432 to 73914, 80137 to 80226, 88168 to 88196, 155763 to 155817, 155824 to 155879, 156289 to 158093, 183147 to 183464, 425321 to 426120, 426207 to 426346, 426364 to 426720 and 454477 to 454586)										
19	2600	420470	GEAR AND BUSHING ASSEMBLY—Impeller shaft drive	–	–	1	1	–	–	–	–	–	–
			Factory installed on the following engines:										
			-54 (86804 to 86866, 429167 to 429376 and 452267 to 452378)										
			-60 (80227 to 80279, 426121 to 426206, 426347 to 426363 and 454587 to 455407)										
		* 112517	GEAR—Impeller shaft drive *Part of assembly 415009.*	1	1	1	1	–	–	–	1	–	–
		* 118744	GEAR—Impeller shaft drive *Part of assembly 420470.*	–	–	1	1	–	–	–	–	–	–
19	2602	112535	BUSHING—Intermediate impeller drive gear shaft	1	1	1	1	–	–	–	1	–	–
19	2604	112537	BUSHING—Intermediate impeller drive shaft pinion front cage	1	1	1	1	–	–	–	1	–	–
19	2606	415023	CAGE AND PIN ASSEMBLY—Intermediate impeller drive shaft pinion, front	1	1	1	1	–	–	–	1	–	–
		* 112561	CAGE—Intermediate impeller drive shaft pinion, front	1	1	1	1	–	–	–	1	–	–
19	2608	20D12	PIN—Intermediate impeller drive shaft pinion front to rear cage aligning	2	2	2	2	–	–	–	2	–	–
19	2610	112518	PINION—Intermediate impeller drive	4	4	4	4	–	–	–	4	–	–
19	2612	112566	BUSHING—Intermediate impeller drive pinion	8	8	8	8	–	–	–	8	–	–
19	2614	112562	CAGE—Intermediate impeller drive shaft pinion, rear	1	1	1	1	–	–	–	1	–	–
19	2616	47D19	BOLT—Intermediate impeller drive shaft pinion front cage to rear cage	4	4	4	4	–	–	–	4	–	–
19	2618	2067D19	LOCKWASHER—Intermediate impeller drive shaft pinion front cage to rear cage	4	4	4	4	–	–	–	4	–	–
		@ 118745	SHAFT—Intermediate impeller drive gear *Superseded by 112522.*	–	–	1	1	–	–	–	–	–	–
19	2620	112522	SHAFT—Intermediate impeller drive gear	1	1	1	1	–	–	–	1	–	–
19	2622	415012	GEAR AND BUSHING ASSEMBLY—Intermediate impeller drive	1	1	1	1	–	–	–	1	–	–
		* 112505	GEAR—Intermediate impeller drive	1	1	1	1	–	–	–	1	–	–
19	2624	112534	BUSHING—Intermediate impeller drive gear	1	1	1	1	–	–	–	1	–	–
19	2626	112520	RETAINER—Impeller drive clutch roller	1	1	1	1	–	–	–	1	–	–
19	2628	112543	WASHER—Intermediate impeller drive gear shaft thrust	1	1	1	1	–	–	–	1	–	–

AVIATIONS WWW.AVIATIONS.COM

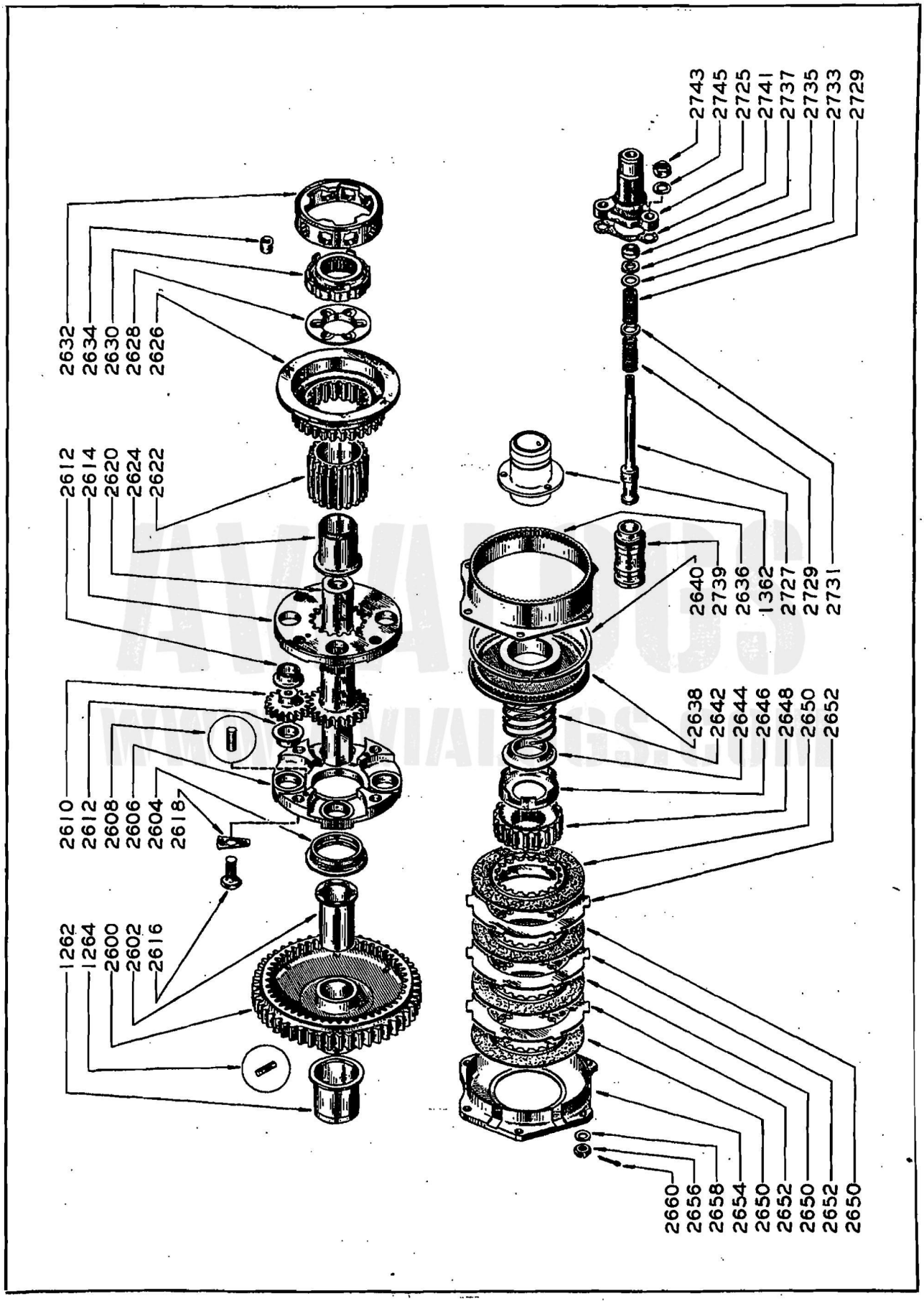

Numbers shown are index numbers and are numerically arranged in the Group Assembly Parts List

Figure 19—Impeller Drive (Roller Type Clutch)

Fig. No.	Index Number	Part Number	Nomenclature 1 2 3 4 5 6 7	Units Per Assy—Model R1820 -40	-40B	-54	-60	-65	-71	-73	-87	-95	-97
19	2630	415934	CAM ASSEMBLY—Impeller low-speed drive clutch	1	1	1	1	–	–	–	1	–	–
		* 114588	CAM—Impeller low-speed drive clutch	1	1	1	1	–	–	–	1	–	–
		* 113596	BUSHING—Impeller low-speed drive clutch cam	1	1	1	1	–	–	–	1	–	–
19	2632	114587	CAGE—Impeller drive clutch roller	1	1	1	1	–	–	–	1	–	–
19	2634	63837	ROLLER—Impeller drive clutch	10	10	10	10	–	–	–	10	–	–
19	2636	113690	SLEEVE—Impeller drive multi-plate clutch	1	1	1	1	–	–	–	1	–	–
19	2638	415269	PISTON AND LOCK ASSEMBLY—Impeller drive multi-plate clutch	1	1	1	1	–	–	–	1	–	–
		* 113435	PISTON—Impeller drive multi-plate clutch	1	1	1	1	–	–	–	1	–	–
		* 112898	LOCK—Impeller drive multi-plate clutch piston	1	1	1	1	–	–	–	1	–	–
19	2640	63276	RING—Impeller drive multi-plate clutch piston	1	1	1	1	–	–	–	1	–	–
		63276Y20	RING—Same as 63276 except standard ID, .010 in. OS OD	AR	AR	AR	AR	–	–	–	AR	–	–
		@ 63612	SPRING—Impeller clutch release (early type) *Superseded by 126349.*	1	1	–	–	–	–	–	1	–	–
		@ 115613	SPRING—Impeller clutch release (intermediate type) *Superseded by 126349.*	1	1	1	1	–	–	–	1	–	–
19	2642	126349	SPRING—Impeller clutch release (late type)	1	1	1	1	–	–	–	1	–	–
19	2644	67680	SPACER—Intermediate impeller drive gear shaft	1	1	1	1	–	–	–	1	–	–
		@ 112536	WASHER—Two-speed clutch thrust *Superseded by 112536N1.*	1	1	1	1	–	–	–	1	–	–
19	2646	112536N1	WASHER—Two-speed clutch thrust	1	1	1	1	–	–	–	1	–	–
19	2648	112521	ADAPTER—Impeller drive multi-plate clutch	1	1	1	1	–	–	–	1	–	–
		@ 114337	DISC—Impeller drive multi-plate clutch *Factory installed on all -40 and -40B engines and on the following engines:* *-54* (86728 to 86737) *-60* (47468, 47469, 73229 to 73279, 73304 to 73429, 73432 to 73624, 88168 to 88196, 155763 to 155817, 155824 to 155879, 156289 to 156634, 157694, 157715 and 426451 to 426720) *-87* (47457 to 47466, 73155 to 73228, 73280 to 73303, 79867 to 80136, 80302 to 80360, 86997 to 87532, 87546 to 87854, 88098 to 88167, 93880 to 94527, 94568 to 94577, 152491 to 152555, 152821 to 152823, 153086 to 153164, 183060 to 183146 and 189949 to 189979) *Superseded by 117540.*	4	4	4	4	–	–	–	4	–	–
		118659	DISC—Impeller drive multi-plate clutch *Factory installed on the following engines:* *-54* (86727 and 86738 to 86751) *-60* (73265 to 73710, 73745 to 73758, 156635 to 157693, 157695 to 157714, 157716 to 158093, 183147 to 183247, 183450 to 183464, 425779 to 425812 and 425816 to 425856) *-87* (153165 to 153194) *Superseded by 117450.*	–	–	4	4	–	–	–	4	–	–
19	2650	117450	DISC—Impeller drive multi-plate clutch *Factory installed on the following engines:* *-54* (86752 to 86866, 429167 to 429376 and 452267 to 452378) *-60* (73711 to 73744, 73795 to 73914, 80137 to 80279, 183248 to 183449, 425321 to 425778, 425813 to 425815, 425857 to 426450 and 454477 to 455407) *-87* (153195 to 153210 and 189980 to 190065)	4	4	4	4	–	–	–	4	–	–
19	2652	113526	PLATE—Impeller drive multi-plate clutch	3	3	3	3	–	–	–	3	–	–

Fig. No.	Index Number	Part Number	Nomenclature 1 2 3 4 5 6 7	Units Per Assy—Model R1820 -40	-40B	-54	-60	-65	-71	-73	-87	-95	-97
19	2654	111254	HOUSING—Impeller drive multi-plate clutch....	1	1	1	1	–	–	–	1	–	–
19	2656	1D1	NUT—Impeller drive multi-plate clutch housing to supercharger rear cover.....	6	6	6	6	–	–	–	6	–	–
19	2658	34D51	WASHER—Impeller drive multi-plate clutch housing to supercharger rear cover.....	6	6	6	6	–	–	–	6	–	–
19	2660	57D3	COTTER PIN—Impeller drive multi-plate clutch housing to supercharger rear cover nut.....	6	6	6	6	–	–	–	6	–	–
			SUPERCHARGER CLUTCH OIL CONTROL VALVE HOUSING (FOR PLATE TYPE CLUTCH)										
			Parts listed in this group were factory installed on all -95 engines and on the following engines: *-40* (31651 to 31674, 31676 to 31722, 45777 to 45876 and 45879 to 45898)										
18	2675	69142	HOUSING—Supercharger clutch oil control valve	1	–	–	–	–	–	–	–	1	–
18	2677	110489	SLEEVE—Supercharger clutch oil control valve..	1	–	–	–	–	–	–	–	1	–
18	2679	413392	VALVE ASSEMBLY—Supercharger clutch oil control.....	1	–	–	–	–	–	–	–	1	–
		110487	VALVE—Supercharger clutch oil control....	1	–	–	–	–	–	–	–	1	–
		110488	STEM—Supercharger clutch oil control valve	1	–	–	–	–	–	–	–	1	–
		34D123	WASHER—Supercharger clutch oil control valve.....	1	–	–	–	–	–	–	–	1	–
		110490	SPRING—Supercharger clutch oil control valve.....	1	–	–	–	–	–	–	–	1	–
		110491	NUT—Supercharger clutch oil control valve.	1	–	–	–	–	–	–	–	1	–
18	2681	66383	SPRING—Supercharger clutch oil cohtrol valve..	1	–	–	–	–	–	–	–	1	–
18	2683	27D202	WASHER—Supercharger clutch oil control valve spring.....	1	–	–	–	–	–	–	–	1	–
18	2685	69144	PACKING—Supercharger clutch oil control valve, inner (Duprene).....	1	–	–	–	–	–	–	–	1	–
18	2687	66384	PACKING—Supercharger clutch oil control valve, outer (cork).....	1	–	–	–	–	–	–	–	1	–
18	2689	66386	GASKET—Supercharger clutch oil control valve housing.....	1	–	–	–	–	–	–	–	1	–
18	2691	4040D5	NUT—Supercharger clutch oil control valve housing to supercharger rear cover..... *Supersedes and supplied for replacement of nut 2D4 and palnut 356-524 installed on some early engines.*	3	–	–	–	–	–	–	–	3	–
18	2693	34D33	WASHER—Supercharger clutch oil control valve housing to supercharger rear cover.....	3	–	–	–	–	–	–	–	3	–
			SUPERCHARGER CLUTCH OIL CONTROL VALVE HOUSING (FOR ROLLER TYPE CLUTCH)										
			Parts listed in this group were factory installed on all -40B, -54, -60 and -87 engines and on the following engines: *-40* (45899 to 45928, 45932 to 45934, 94528 to 94567, 152790 to 152799, 152818 to 152820 and 152854 to 152943)										
		@ 415831	HOUSING AND SLEEVE ASSEMBLY—Supercharger clutch oil control valve..... *Superseded by 113503.*	1	1	1	1	–	–	–	1	–	–
19	2725	113503	HOUSING—Supercharger clutch oil control valve	1	1	1	1	–	–	–	1	–	–
19	2727	115390	VALVE—Supercharger clutch oil control.....	1	1	1	1	–	–	–	1	–	–

AVIATIONBUFFS
WWW.AVIATIONBUFFS.COM

Fig. No.	Index Number	Part Number	Nomenclature 1 2 3 4 5 6 7	Units Per Assy—Model R1820 -40	-40B	-54	-60	-65	-71	-73	-87	-95	-97
19	2729	113501	SPRING—Supercharger clutch oil control valve..	2	2	2	2	–	–	–	2	–	–
		27D118	WASHER—Supercharger clutch oil control valve spring stop..... *Factory installed on all engines except the following engines:* *-54* (86859 to 86866, 429167 to 429376 and 452267 to 452378)	1	1	1	1	–	–	–	1	–	–
19	2731	27D247	WASHER—Supercharger clutch oil control valve spring stop..... *Factory installed on the following engines:* *-54* (86859 to 86866, 429167 to 429376 and 452267 to 452378)	–	–	1	–	–	–	–	–	–	–
19	2733	27D202	WASHER—Supercharger clutch oil control valve spring, upper.....	1	1	1	1	–	–	–	1	–	–
19	2735	69144	PACKING—Supercharger clutch oil control valve, inner (Duprene).....	1	1	1	1	–	–	–	1	–	–
19	2737	66384	PACKING—Supercharger clutch oil control valve, outer (cork).....	1	1	1	1	–	–	–	1	–	–
19	2739	415386	SLEEVE AND PIN ASSEMBLY—Supercharger clutch oil control valve.....	1	1	1	1	–	–	–	1	–	–
		* 112620	SLEEVE—Supercharger clutch oil control valve.....	1	1	1	1	–	–	–	1	–	–
		* 17D14	PIN—Supercharger clutch oil control valve sleeve oil hole.....	3	3	3	3	–	–	–	3	–	–
19	2741	66386	GASKET—Supercharger clutch oil control valve housing to supercharger rear cover.....	1	1	1	1	–	–	–	1	–	–
19	2743	4040D5	NUT—Supercharger clutch oil control valve housing to supercharger rear cover.....	3	3	3	3	–	–	–	3	–	–
19	2745	34D33	WASHER—Supercharger clutch oil control valve housing to supercharger rear cover.....	3	3	3	3	–	–	–	3	–	–

ACCESSORY DRIVES

ACCESSORY DRIVE AND STARTER SHAFT

		@ 68368	SHAFT—Accessory drive and starter..... *Factory installed on the following engines:* *-40* (31651 to 31668 and 31676 to 31709) *-65* (29898 to 29997, 30030 to 30045, 41102 to 41122 and 41124 to 41133) *-95* (31732, 31733, 31741 to 31748 and 31750 to 31752) *Superseded by 113581.*	1	–	–	–	1	–	–	–	1	–
		@ 113506	SHAFT—Accessory drive and starter..... *Factory installed on the following engines:* *-40* (31669 to 31674, 31710 to 31722, 45777 to 45876, 45879 to 45928 and 45932 to 45934) *-95* (31805, 31812, 31814, 31818 and 31823) *-97* (81105 to 81114) *Superseded by 113581.*	1	–	–	–	–	–	–	–	1	1
20	2800	113581	SHAFT—Accessory drive and starter..... *Factory installed on all -40B, -54, -60, -71, -73 and -87 engines and on the following engines:* *-40* (94528 to 94567, 152790 to 152799, 152818 to 152820 and 152854 to 152943) *-65* (29347, 30018 to 30029, 30046 to 30050, 41136 to 41267, 44242 to 44295, 44311 to 45387, 45394 to 45399, 45401 to 45474 and 45939 to 47456) *-95* (80373 to 80376) *-97* (47467, 69425 to 73154, 80787 to 81104,	1	1	1	1	1	1	1	1	1	1

AVIATIONS
WWW.AVIATIONS.COM

Fig. No.	Index Number	Part Number	Nomenclature 1 2 3 4 5 6 7	Units Per Assy—Model R1820 -40	-40B	-54	-60	-65	-71	-73	-87	-95	-97
			81115 to 81234, 81236 to 82306 and 190066 to 190522)										
20	2802	67369	RING—Accessory drive and starter shaft oil seal.	1	1	1	1	1	1	1	1	1	1
20	2804	62336	GEAR—Accessory drive	1	1	1	1	1	1	1	1	1	1
		@ 29550	SPRING—Accessory drive gear (early type) *Superseded by 112043.*	5	–	–	–	–	5	5	–	–	–
20	2806	112043	SPRING—Accessory drive gear (late type)	5	5	5	5	5	5	5	5	5	5
20	2808	62338	PIN—Accessory drive gear spring	10	10	10	10	10	10	10	10	10	10
20	2810	29539	PLATE—Accessory drive and starter shaft	1	1	1	1	1	1	1	1	1	1
20	2812	86D5	SCREW—Accessory drive and starter shaft plate to accessory drive and starter shaft	5	5	5	5	5	5	5	5	5	5
		@ 115460	PLUG—Accessory drive and starter shaft oil retaining (early type) *Used with couplings 115461 and 115751.* *Superseded by 128061.*	1	1	1	1	1	1	1	1	1	1
20	2814	128061	PLUG—Accessory drive and starter shaft oil retaining (late type)	1	1	1	1	1	1	1	1	1	1
20	2816	2017D10	RING—Accessory drive and starter shaft oil retaining plug lock *Used with couplings 115461 and 115751.*	1	1	1	1	1	1	1	1	1	1
		@ 67768	SPACER—Starter coupling (1.90 in. long) *Used with couplings 66326 and 66377.* *Superseded by 113511.*	1	–	–	–	1	–	–	–	1	–
		113511	SPACER—Starter coupling (1.90 in. long) *Used with couplings 66326, 66377, 113512 and 113846.*	1	1	–	1	1	1	1	1	1	1
20	2818	115458	SPACER—Starter coupling (.93 in. long) *Used with couplings 115461 and 115751.*	1	1	1	1	1	1	1	1	1	1
20	2820	115459	SPRING—Accessory drive and starter shaft oil retaining plug *Used with couplings 115461 and 115751.*	1	1	1	1	1	1	1	1	1	1

AVIALOGS
WWW.AVIALOGS.COM

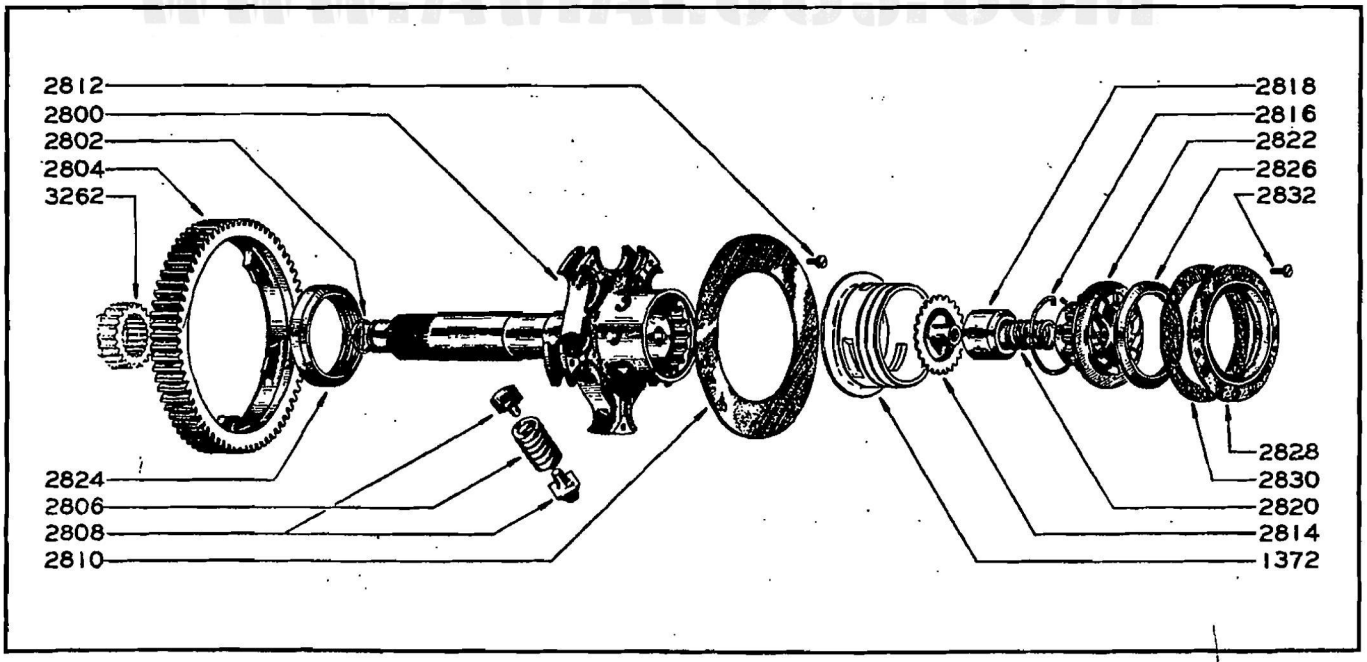

Numbers shown are index numbers and are numerically arranged in the Group Assembly Parts List

Figure 20—Accessory Drive and Starter Shaft

Fig. No.	Index Number	Part Number	Nomenclature 1 2 3 4 5 6 7	Units Per Assy—Model R1820 -40	-40B	-54	-60	-65	-71	-73	-87	-95	-97
		@ 66326	COUPLING—Starter (three jaw) (1.70 in. long)..	–	–	–	–	1	–	–	–	1	–
			Factory installed on the following engines:										
			-65 (29898 to 29997, 30030 to 30045, 41102 to 41122 and 41124 to 41133)										
			-95 (31732, 31733, 31741 to 31748 and 31750 to 31752)										
			For replacement, make the following substitutions:										
			Use — Description — Remove — Quant. *115461* — *Coupling — Starter* — *66326* — *1* *115458* — *Spacer — Starter coupling* — *67768* — *1* *128061* — *Plug — Accessory drive and starter shaft oil retaining* — *1* *115459* — *Spring — Accessory drive and starter shaft oil retaining plug* — *1* *2017D10* — *Ring — Accessory drive and starter shaft oil retaining plug lock* — *1*										
		@ 113512	COUPLING—Starter (three jaw) (1.65 in. long)..	–	–	–	–	1	1	1	1	1	1
			Factory installed on all -73 engines and on the following engines:										
			-65 (29347, 30018 to 30029, 30046 to 30050, 41136 to 41267, 44242 to 44295, 44311 to 45387, 45394 to 45399, 45401 to 45474 and 45939 to 47456)										
			-71 (41442, 41443, 41469 to 41486, 41510 to 41514, 45545 to 45549, 45560, 152629 to 152667, 152772 to 152787, 152802 to 152805, 152810 to 152817, 152824 to 152839, 152842 to 152853 and 152944 to 152985)										
			-87 (45457 to 47466, 73155 to 73228, 73280 to 73303, 79867 to 80136, 80302 to 80360, 86997 to 87532, 87546 to 87648, 87659 to 87769, 87779 to 87857, 88098 to 88117, 93880 to 94326, 152491 to 152511, 152821 to 152823 and 153086 to 153105)										
			-95 (31805, 31812, 31814, 31818, 31823 and 80373 to 80376)										
			-97 (69425 to 73154, 80787 to 81084, 81105 to 81234 and 81236 to 81437)										
			For replacement, make the following substitutions: Use — Description — Remove — Quant. *115461* — *Coupling — Starter* — *113512* — *1* *115458* — *Spacer — Starter coupling* — *113511* — *1* *128061* — *Plug — Accessory drive and starter shaft oil retaining* — *1* *115459* — *Spring — Accessory drive and starter shaft oil retaining plug* — *1* *2017D10* — *Ring — Accessory drive and starter shaft oil retaining plug lock* — *1*										
		@ 66377	COUPLING—Starter (12 jaw) (1.70 in. long)....	1	–	–	–	–	–	–	–	–	–
			Factory installed on the following engines:										
			-40 (31651 to 31668 and 31676 to 31709)										
			For replacement, make the following substitutions:										

Fig. No.	Index Number	Part Number	Nomenclature 1 2 3 4 5 6 7	Units Per Assy—Model R1820 -40	-40B	-54	-60	-65	-71	-73	-87	-95	-97
			Use / Description / Remove / Quant. *115751* Coupling — Starter 66377 1 *115458* Spacer — Starter coupling 67768 1 *128061* Plug — Accessory drive and starter shaft oil retaining plug 1 *115459* Spring — Accessory drive and starter shaft oil retaining plug 1 *2017D10* Ring — Accessory drive and starter shaft oil retaining plug lock 1										
		@ 113846	COUPLING—Starter (12 jaw) (1.65 in. long).... *Factory installed on all -40B engines and on the following engines:* *-40* (31669 to 31674, 31710 to 31722, 45777 to 45876, 45879 to 45928, 45932 to 45934, 94528 to 94562, 152790 to 152799, 152818 to 152820 and 152854 to 152933) *-60* (73229 to 73279, 73304 to 73429, 73432, 88168 to 88196, 155763 to 155793, 155824 to 155865 and 156289 to 156817) *-87* (47457 to 47466, 73155 to 73228, 73280 to 73303, 79867 to 80136, 80302 to 80360, 86997 to 87532, 87546 to 87648, 87659 to 87769, 87779 to 87857, 88098 to 88117, 93880 to 94326, 152491 to 152511, 152821 to 152823 and 153086 to 153105) *For replacement, make the following substitutions:* Use / Description / Remove / Quant. *115751* Coupling— Starter *113846* 1 *115458* Spacer — Starter coupling *113511* 1 *128061* Plug — Accessory drive and starter shaft oil retaining 1 *115459* Spring — Accessory drive and starter shaft oil retaining plug 1 *2017D10* Ring — Accessory drive and starter shaft oil retaining plug lock 1	1	1	–	1	–	–	–	1	–	–
		115461	COUPLING—Starter (three jaw) (1.24 in. long). *Factory installed on the following engines:* *-71* (152986 to 153085) *-87* (87649 to 87658, 87770 to 87778, 88118 to 88167, 94327 to 94527, 94568 to 94577, 152512 to 152555, 153106 to 153210, 183060 to 183146 and 189949 to 190065) *-97* (47467, 81085 to 81104, 81438 to 82306 and 190066 to 190522)	–	–	–	–	1	1	1	1	1	1
20	2822	115751	COUPLING—Starter (12 jaw) (1.24 in. long)..... *Factory installed on all -54 engines and on the following engines:* *-40* (94563 to 94567 and 152934 to 152943) *-60* (47468, 47469, 73433 to 73914, 80137 to 80301, 155794 to 155817, 155866 to 155879, 156818 to 158093, 183147 to 183464, 425321 to 426720 and 454477 to 455407)	1	1	1	1	–	–	–	1	–	–
20	2824	66376	RING—Accessory drive and starter shaft thrust..	1	1	1	1	1	1	1	1	1	1

AVIATIONGS
WWW.AVIATIONGS.COM

Fig. No.	Index Number	Part Number	Nomenclature 1 2 3 4 5 6 7	Units Per Assy—Model R1820 -40	-40B	-54	-60	-65	-71	-73	-87	-95	-97
20	2826	66327	PACKING—Accessory drive and starter shaft oil seal	1	1	1	1	1	1	1	1	1	1
		@ 66328	RING—Accessory drive and starter shaft oil seal packing retaining	1	–	–	–	1	–	–	–	1	–
			Factory installed on the following engines:										
			-40 (31651 to 31668 and 31676 to 31709)										
			-65 (29347 and 29898 to 29997)										
			-95 (31732 and 31733)										
			66328 has 12 plain attaching screw holes.										
			For replacement, make the following substitutions:										
			Use / Description / Remove / Quant.										
			116172 — *Ring — Accessory drive and starter shaft oil seal packing retaining* — *66328* — *1*										
			SD602 — *Screw — Accessory drive and starter shaft oil seal packing retaining ring to supercharger rear cover* — *2054D7* — *12*										
			1210 — *Lockwasher — Accessory drive and starter shaft oil seal packing retaining ring to supercharger rear cover* — *12*										
		@ 113752	RING—Accessory drive and starter shaft oil seal packing retaining	1	–	–	–	1	1	1	1	1	1
			Factory installed on all -73 engines and on the following engines:										
			-40 (31669 to 31674, 31710 to 31722, 45777 to 45876, 45879 to 45928 and 45932 to 45934)										
			-65 (30018 to 30050, 41102 to 41122, 41124 to 41267, 44242 to 44295, 44311 to 45387, 45394 to 45399, 45401 to 45474, 45939 to 47122 and 47376 to 47400)										
			-71 (41296 to 41298, 41418, 41487 to 41506, 44231 to 44241 and 44296 to 44307)										
			-87 (73155 to 73182, 73280 to 73303, 79867 to 79915 and 86997 to 87000)										
			-95 (31741 to 31748, 31750 to 31752, 31805, 31812, 31814, 31818 and 31823)										
			-97 (69522 to 69546, 69579 to 69696 and 70047 to 70096)										
			113752 has 12 countersunk attaching screw holes and annular groove on the center line of the holes.										
			For replacement, make the following substitutions:										
			Use / Description / Remove / Quant.										
			116172 — *Ring — Accessory drive and starter shaft oil seal packing retaining* — *113752* — *1*										
			SD602 — *Screw — Accessory drive and starter shaft oil seal packing retaining ring to supercharger rear cover* — *55D19* — *12*										
20	2828	116172	RING—Accessory drive and starter shaft oil seal packing retaining	1	1	1	1	1	1	1	1	1	1
			Factory installed on all -40B, -54, and -60 engines and on the following engines:										
			-40 (94528 to 94567, 152790 to 152799, 152818 to 152820 and 152854 to 152943)										
			-65 (47123 to 47375 and 47401 to 47456)										

AVIATIONGS
WWW.AVIATIONGS.COM

Fig. No.	Index Number	Part Number	Nomenclature 1 2 3 4 5 6 7	Units Per Assy—Model R1820 -40	-40B	-54	-60	-65	-71	-73	-87	-95	-97
			-71 (41442, 41443, 41469 to 41486, 41510 to 41514, 45545 to 45549, 45560, 152629 to 152667, 152772 to 152787, 152802 to 152805, 152810 to 152817, 152824 to 152839, 152842 to 152853 and 152944 to 153085)										
			-87 (47457 to 47466, 73183 to 73228, 79916 to 80136, 80302 to 80360, 87001 to 87532, 87546 to 87857, 88098 to 88167, 93880 to 94527, 94568 to 94577, 152491 to 152555, 152821 to 152823, 153086 to 153210, 183060 to 183146 and 189949 to 190065)										
			-95 (80373 to 80376)										
			-97 (47467, 69425 to 69521, 69547 to 69596, 69697 to 70046, 70097 to 73154, 80787 to 81234, 81236 to 82306 and 190066 to 190522)										
			116172 has 12 countersunk attaching screw holes but does not have an annular groove on the center line of the holes.										
		@ 66329	GASKET—Accessory drive and starter shaft oil seal packing retaining ring (early type).... *Superseded by 127527.*	1	1	–	1	1	1	1	1	1	1
20	2830	127527	GASKET—Accessory drive and starter shaft oil seal packing retaining ring (late type).....	1	1	1	1	1	1	1	1	1	1
		2054D7	SCREW—Accessory drive and starter shaft oil seal packing retaining ring to supercharger rear cover (fillister head)..... *Used with ring 66328.*	12	–	–	–	12	–	–	–	12	–
		55D19	SCREW—Accessory drive and starter shaft oil seal packing retaining ring to supercharger rear cover (countersunk head, standard)..... *Used with ring 113752.*	12	–	–	–	12	12	12	12	12	12
20	2832	SD602	SCREW—Accessory drive and starter shaft oil seal packing retaining ring to supercharger rear cover (countersunk head) (Shakeproof) (Wright Part No. 4061D101)..... *Used with ring 116172.*	12	12	12	12	12	12	12	12	12	12
		1210	LOCKWASHER—Accessory drive and starter shaft oil seal packing retaining ring to supercharger rear cover (Shakeproof) (Wright Part No. 189D1)..... *Used with screw 2054D7.*	12	–	–	–	12	–	–	–	12	–
			GENERATOR DRIVE										
			Some engines in this catalog were equipped with a six piece type oil seal consisting of a collar, plate, spring, seal and two retaining rings. The six piece type oil seal has been superseded by a one piece type used in conjunction with a gasket installed between the seal and the supercharger rear cover. Parts comprising the six piece type are no longer supplied and for replacement of any of these parts the following parts should be used. Use — Description — Quant. *118811N1* — *Seal Assembly—Generator drive oil* — *1* *120016* — *Gasket—Generator drive oil seal* — *1*										
		@ 412639	GEAR AND PLUG ASSEMBLY—Generator drive (early type)..... *Superseded by 414348.*	1	–	–	–	1	–	–	–	–	1
21, 22	2860	414348	GEAR AND PLUG ASSEMBLY—Generator drive (late type).....	1	1	1	1	1	1	1	1	1	1

AVIATIONS
WWW.AVIATIONS.COM

Fig. No.	Index Number	Part Number	Nomenclature 1 2 3 4 5 6 7	Units Per Assy—Model R1820 -40 -40B -54 -60 -65 -71 -73 -87 -95 -97

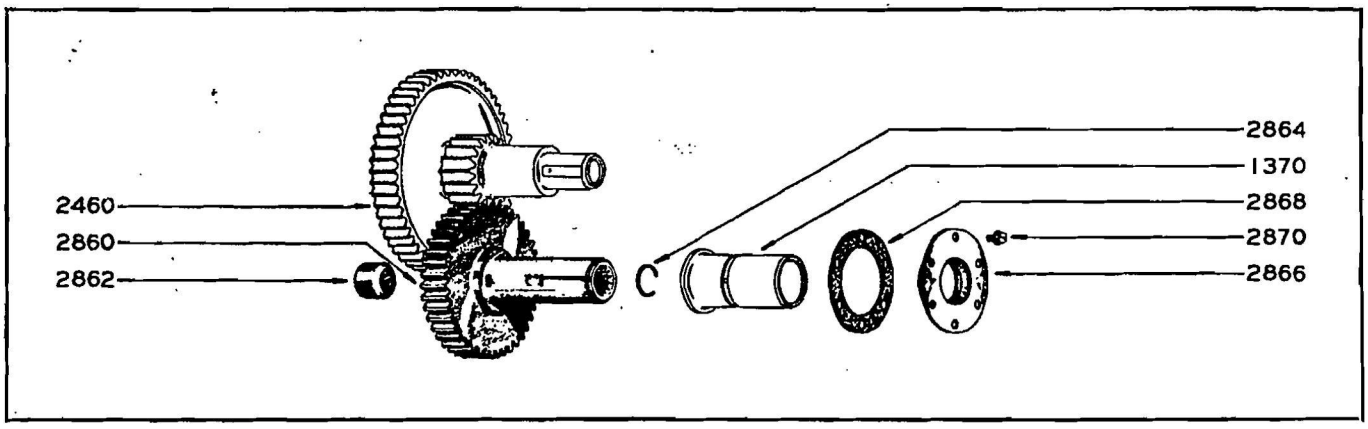

Numbers shown are index numbers and are numerically arranged in the Group Assembly Parts List

Figure 21—Generator Drive (Single-Speed Engines)

		* 69502	GEAR—Generator drive..... *Part of assembly 412639.*	1	–	–	–	1	–	–	–	–	1
		* 111850	GEAR—Generator drive..... *Part of assembly 414348.*	1	1	1	1	1	1	1	1	1	1
		2052D12	PLUG—Generator drive gear (.938 in. x .800 in.)..... *Part of assembly 412639.*	1	–	–	–	1	–	–	–	–	1
21, 22	2862	2052D21	PLUG—Generator drive gear (.969 in. x .710 in.)..... *Part of assembly 414348.*	1	1	1	1	1	1	1	1	1	1
21, 22	2864	2019D7	CIRCLET—Generator drive gear..... *Part of assembly 414348.*	1	1	1	1	1	1	1	1	1	1
		@ 68928	SPRING—Generator drive oil seal..... *See note under "Generator Drive."*	1	1	–	1	1	1	1	1	1	1
		@ 68932	RING—Generator drive oil seal retaining, front.. *68932 has three slots to accommodate the lugs on the early type rear ring 68929. See note under "Generator Drive."*	1	–	–	–	–	–	–	–	–	–
		@ 113742	RING—Generator drive oil seal retaining, front.. *113742 does not have slots. See note under "Generator Drive."*	1	1	–	1	1	1	1	1	1	1
		@ 68930	SEAL—Generator drive oil (flat)..... *See note under "Generator Drive."*	1	–	–	–	1	–	–	–	1	–

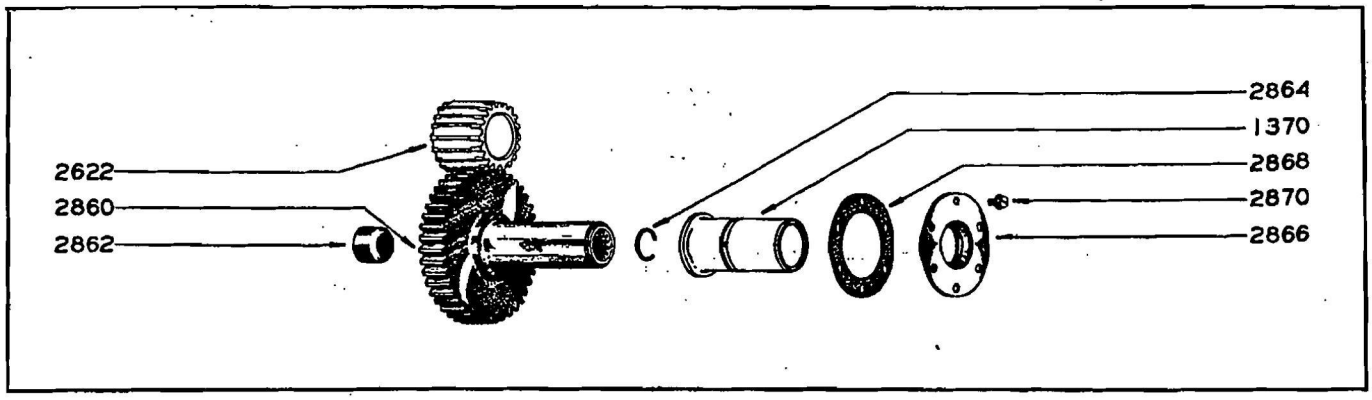

Numbers shown are index numbers and are numerically arranged in the Group Assembly Parts List

Figure 22—Generator Drive (Two-Speed Engines)

Fig. No.	Index Number	Part Number	Nomenclature 1 2 3 4 5 6 7	Units Per Assy—Model R1820 -40	-40B	-54	-60	-65	-71	-73	-87	-95	-97
		@ 111033	SEAL—Generator drive oil (offset)..... *See note under "Generator Drive."*	1	-	-	-	-	-	-	-	-	-
		@ 114984	SEAL—Generator drive oil (offset)..... *See note under "Generator Drive."*	1	1	-	1	-	-	-	-	-	-
		@ 68929	RING—Generator drive oil seal retaining, rear.... *68929 has no lugs on the edge. Originally, this ring had three lugs on the inner edge which fitted into slots on the front ring 68932. See note under "Generator Drive."*	1	1	-	1	1	1	1	1	1	1
		@ 69501	COLLAR—Generator drive oil seal..... *69501 now has the oil seal lip .179 in. from the anti-propeller face and requires the use of seal 111033 or 114984. Originally, this collar had the lip .150 in. from the anti-propeller face and was used with seal 68930. See note under "Generator Drive."*	1	1	-	1	1	1	1	1	1	1
		@ 68933	PLATE—Generator drive oil seal reinforcing..... *See note under "Generator Drive."*	1	1	-	1	1	1	1	1	1	1
21, 22	2866	118811N1	SEAL ASSEMBLY—Generator drive..... *See note under "Generator Drive."*	1	1	1	1	1	1	1	1	1	1
21, 22	2868	120016	GASKET—Generator drive oil seal..... *See note under "Generator Drive."*	1	1	1	1	1	1	1	1	1	1
21, 22	2870	SD601	SCREW—Generator drive oil seal or reinforcing plate to supercharger rear cover (Shakeproof) (Wright Part No. 4061D1)..... *Supersedes and supplied for replacement of screw 147D4 and Shakeproof lockwasher 1210.*	6	6	6	6	6	6	6	6	6	6
			OIL PUMP DRIVE										
23	2900	413453	GEAR AND RETAINER ASSEMBLY—Oil pump drive.....	1	1	1	1	1	1	1	1	1	1
		* 62220	GEAR—Oil pump drive.....	1	1	1	1	1	1	1	1	1	1
23	2902	113960	RETAINER—Oil pump drive gear spring...	1	1	1	1	1	1	1	1	1	1
23	2904	110424	SPRING—Oil pump drive gear.....	1	1	1	1	1	1	1	1	1	1
			FUEL PUMP AND DUAL ACCESSORY DRIVE										
23	2925	28305	GEAR—Fuel pump and dual accessory drive.....	1	1	1	1	1	1	1	1	1	1
23	2927	65D15	SCREW—Fuel pump and dual accessory drive gear to shaft.....	6	6	6	6	6	6	6	6	6	6
23	2929	46484	SHAFT ASSEMBLY—Fuel pump and dual accessory drive.....	1	1	1	1	1	1	1	1	1	1
		* 62025	SHAFT—Fuel pump and dual accessory drive	1	1	1	1	1	1	1	1	1	1
		* 29087	PLUG—Fuel pump and dual accessory drive shaft.....	1	1	1	1	1	1	1	1	1	1
			FUEL PUMP DRIVE										
		@ 411884	SUPPORT ASSEMBLY—Fuel pump drive shaft *Factory installed on all -40, -40B, -65, -73 and -95 engines and on the following engines:* *-54* (86727 to 86793) *-60* (47468, 47469, 73229 to 73279, 73304 to 73429, 73432 to 73820, 88168 to 88196, 155763 to 155817, 155824 to 155879, 156289 to 158093, 183147 to 183464, 425321 to 425542, 425573 to 425881, 426364 to 426429 and 426451 to 426720) *-71* (41296 to 41298, 41418, 41442, 41443, 41469 to 41506, 41510 to 41514, 44231 to 44241, 44296 to 44307, 45545 to 45549, 45560, 152629 to 152667, 152772 to 152787, 152802 to 152805, 152810 to 152817, 152824 to 152839, 152842 to 152853 and 152944 to 153055)	1	1	1	1	1	1	1	1	1	1

AVIATIONS
WWW.AVIATIONS.COM

Fig. No.	Index Number	Part Number	Nomenclature 1 2 3 4 5 6 7	Units Per Assy—Model R1820 -40 -40B -54 -60 -65 -71 -73 -87 -95 -97
			-87 (47457 to 47466, 73155 to 73228, 73280 to 73303, 79867 to 80136, 80302 to 80360, 86997 to 87532, 87546 to 87857, 88098 to 88167, 93880 to 94527, 94568 to 94577, 152491 to 152555, 152821 to 152823, 153086 to 153210, 183060 to 183146 and 189949 to 190005)	
			-97 (47467, 69425 to 73154, 80787 to 81234, 81236 to 82306 and 190066 to 190461)	
			Superseded by 411038.	

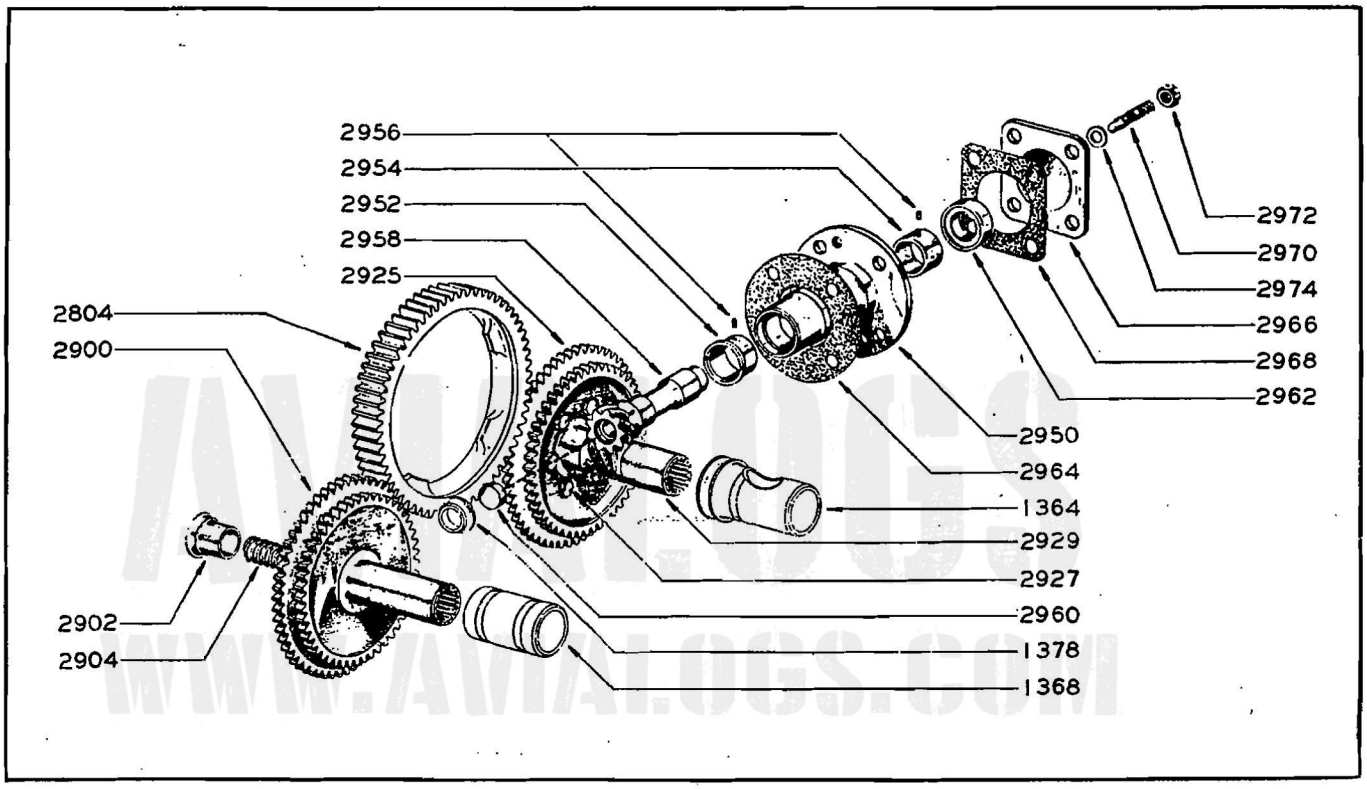

Numbers shown are index numbers and are numerically arranged in the Group Assembly Parts List

Figure 23—Oil Pump and Fuel Pump Drives and Drive for Dual Accessory Drives

23	2950	411038	SUPPORT ASSEMBLY—Fuel pump drive shaft *Factory installed on the following engines:* *-54* (86794 to 86868, 429167 to 429376 and 452267 to 452378) *-60* (73821 to 73914, 80137 to 80279, 425543 to 425572, 425882 to 426363, 426430 to 426451 and 454477 to 455407) *-71* (153056 to 153085) *-87* (190006 to 190065) *-97* (190462 to 190522)	1	1	1	1	1	1	1	1	1	1
		* 68607	SUPPORT—Fuel pump drive shaft..... *Part of assembly 411884.*	1	1	1	1	1	1	1	1	1	1
		* 67570	SUPPORT—Fuel pump drive shaft..... *Part of assembly 411038.*	1	1	1	1	1	1	1	1	1	1
		68609	BUSHING—Fuel pump drive shaft (shouldered)..... *Part of assembly 411884.*	2	2	2	2	2	2	2	2	2	2
23	2952	67568	BUSHING—Fuel pump drive shaft (shouldered)..... *Part of assembly 411038.*	1	1	1	1	1	1	1	1	1	1

Fig. No.	Index Number	Part Number	Nomenclature 1 2 3 4 5 6 7	Units Per Assy—Model R1820 -40	-40B	-54	-60	-65	-71	-73	-87	-95	-97
23	2954	67567	BUSHING—Fuel pump drive shaft (plain).. *Part of assembly 411038.*	1	1	1	1	1	1	1	1	1	1
23	2956	13D6	PIN—Fuel pump drive shaft bushing retaining.....	2	2	2	2	2	2	2	2	2	2
		13H6	PIN—Same as 13D6 except .002 in. OS OD..	AR	AR	AR	AR	AR	AR	AR	AR	AR	AR
		13S6	PIN—Same as 13D6 except .010 in. OS OD..	AR	AR	AR	AR	AR	AR	AR	AR	AR	AR
		13J6	PIN—Same as 13D6 except .015 in. OS OD..	AR	AR	AR	AR	AR	AR	AR	AR	AR	AR
23	2958	411883	SHAFT ASSEMBLY—Fuel pump drive.....	1	1	1	1	1	1	1	1	1	1
		* 68608	SHAFT—Fuel pump drive.....	1	1	1	1	1	1	1	1	1	1
23	2960	61951	PLUG—Fuel pump drive shaft.....	1	1	1	1	1	1	1	1	1	1
23	2962	61957	SEAL—Fuel pump drive shaft oil.....	1	1	1	1	1	1	1	1	1	1
23	2964	68610	GASKET—Fuel pump drive shaft support.....	1	1	1	1	1	1	1	1	1	1
		@ 67566	COVER—Fuel pump substituting (early type)... *Superseded by 68668N3.*	1	–	–	–	–	–	–	–	–	–
		@ 68668	COVER—Fuel pump substituting (intermediate type)..... *Superseded by 68668N3.*	1	1	1	1	1	1	1	1	1	1
23	2966	68668N3	COVER—Fuel pump substituting (late type)....	1	1	1	1	1	1	1	1	1	1
23	2968	67575	GASKET—Fuel pump or substituting cover.....	1	1	1	1	1	1	1	1	1	1
23	2970	2043D62	STUD—Fuel pump or substituting cover to supercharger rear housing.....	4	4	4	4	4	4	4	4	4	4
23	2972	1D4	NUT—Fuel pump or substituting cover to supercharger rear housing.....	4	4	4	4	4	4	4	4	4	4
23	2974	34D33	WASHER—Fuel pump or substituting cover to supercharger rear housing.....	4	4	4	4	4	4	4	4	4	4

MAGNETO AND GUN SYNCHRONIZER IMPULSE GENERATOR DRIVES (FOR ENGINES WITH PROVISION FOR TWO GUN DRIVES)

Factory installed on all engines except the following engines:
-97 (47467, 72844 to 72869, 72881 to 73154, 80787 to 81234, 81236 to 82197, 82258 to 82306 and 190066 to 190522)

Some engines in this group were equipped with a six piece type oil seal consisting of a collar, plate, spring, seal and two retaining rings. The six piece type oil seal has been superseded by a one piece type used in conjunction with a gasket installed between the seal and the supercharger rear cover. Parts comprising the six piece type are no longer supplied and for replacement of any of these parts the following parts should be used:

Use	Description	Quant.
118811N1	*Seal Assembly—Magneto drive oil*	*1*
120016	*Gasket—Magneto drive oil seal*	*1*

Fig. No.	Index Number	Part Number	Nomenclature 1 2 3 4 5 6 7	Units Per Assy—Model R1820 -40	-40B	-54	-60	-65	-71	-73	-87	-95	-97
24	3000	27629	GEAR—Magneto and gun synchronizer impulse generator drive.....	2	2	2	2	2	2	2	2	2	2
24	3002	65D15	SCREW—Magneto and gun synchronizer impulse generator drive gear to shaft.....	12	12	12	12	12	12	12	12	12	12
		412186	SHAFT ASSEMBLY—Magneto and gun synchronizer impulse generator drive (.5625:1 ratio)..... *Factory installed on all -65 engines and on the following engines:* *-97* (69425 to 72843, 72870 to 72880 and 82198 to 82257)	–	–	–	–	2	–	–	–	–	2

Fig. No.	Index Number	Part Number	Nomenclature 1 2 3 4 5 6 7	Units Per Assy—Model R1820 -40 -40B -54 -60 -65 -71 -73 -87 -95 -97

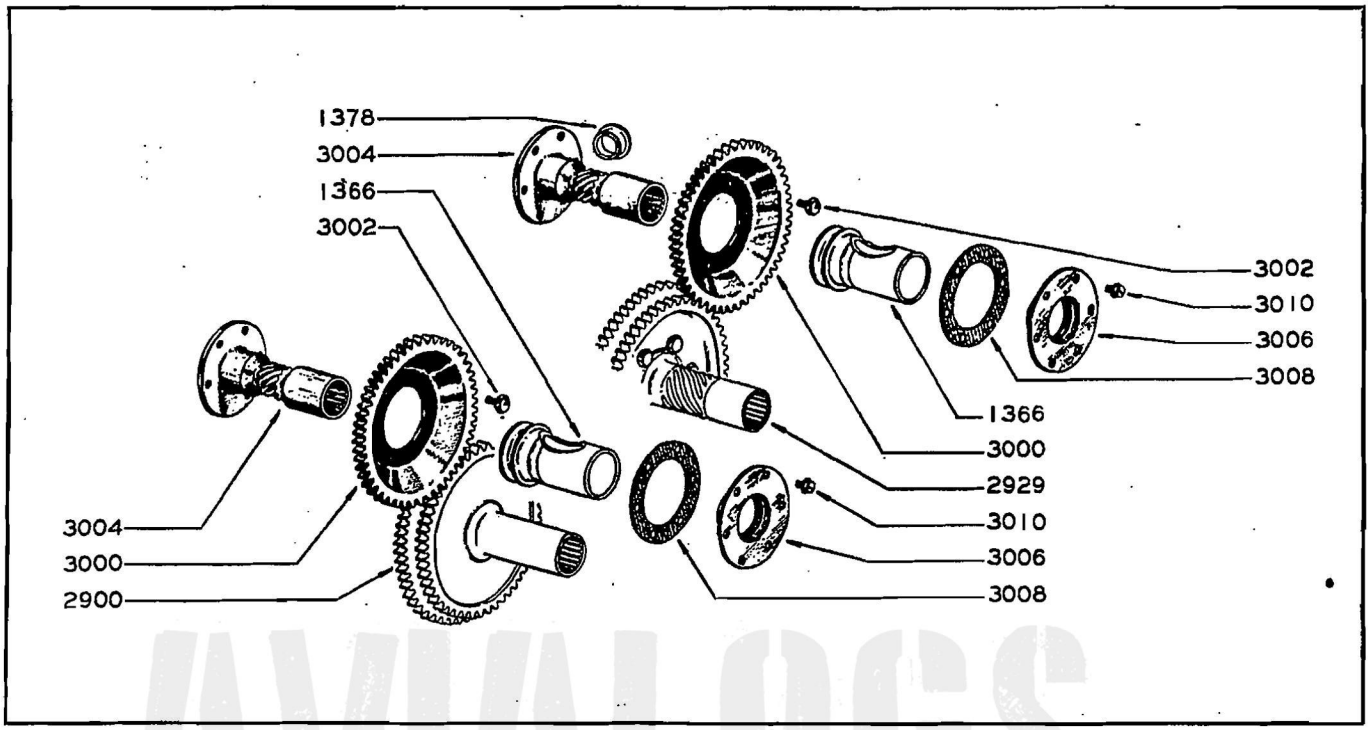

Numbers shown are index numbers and are numerically arranged in the Group Assembly Parts List

Figure 24—Magneto and Gun Synchronizer Impulse Generator Drives (Two Gun Drives)

24	3004	412584	SHAFT ASSEMBLY—Magneto and gun synchronizer impulse generator drive (.666:1 ratio)..... *Factory installed on all -40, -40B, -60, -71, -73, -87 and -95 engines.*	2	2	–	2	–	2	2	2	2	–
		416606	SHAFT ASSEMBLY—Magneto and gun synchronizer impulse generator drive (1:1 ratio)..... *Factory installed on all -54 engines.*	–	–	2	–	–	–	–	–	–	–
		* 68944	SHAFT—Magneto and gun synchronizer impulse generator drive..... *Part of assembly 412186.*	–	–	–	–	1	–	–	–	–	1
		* 65286	SHAFT—Magneto and gun synchronizer impulse generator drive..... *Part of assembly 412584.*	1	1	–	1	–	1	1	1	1	–
		* 64325	SHAFT—Magneto and gun synchronizer impulse generator drive..... *Part of assembly 416606.*	–	–	1	–	–	–	–	–	–	–
		* 29087	PLUG—Magneto and gun synchronizer impulse generator drive shaft.....	1	1	1	1	1	1	1	1	1	1
		@ 68928	SPRING—Magneto drive oil seal..... *See note under "Magneto and Gun Synchronizer Impulse Generator Drives."*	2	2	–	2	2	2	2	2	2	2
		@ 68932	RING—Magneto drive oil seal retaining, front... *68932 has three slots to accommodate the lugs on the early type rear ring 68929.* *See note under "Magneto and Gun Synchronizer Impulse Generator Drives."*	2	–	–	–	–	–	–	–	–	–
		@ 113742	RING—Magneto drive oil seal retaining, front... *113742 does not have slots.* *See note under "Magneto and Gun Synchronizer Impulse Generator Drives."*	2	2	–	2	2	2	2	2	2	2

Fig. No.	Index Number	Part Number	Nomenclature 1 2 3 4 5 6 7	Units Per Assy—Model R1820 -40	-40B	-54	-60	-65	-71	-73	-87	-95	-97
		@ 111033	SEAL—Magneto drive oil..... *See note under "Magneto and Gun Synchronizer Impulse Generator Drives."*	2	–	–	–	–	–	–	–	2	–
		@ 114984	SEAL—Magneto drive oil..... *See note under "Magneto and Gun Synchronizer Impulse Generator Drives."*	2	2	–	2	2	2	2	2	2	2
		@ 68929	RING—Magneto drive oil seal retaining, rear.... *68929 has no lugs on the inner edge. Originally, this ring had three lugs on the inner edge which fitted into slots on the front ring 68932.* *See note under "Magneto and Gun Synchronizer Impulse Generator Drives."*	2	2	–	2	2	2	2	2	2	2
		@ 68931	COLLAR—Magneto drive oil seal..... *See note under "Magneto and Gun Synchronizer Impulse Generator Drives."*	2	2	–	2	2	2	2	2	2	2
		@ 68933	PLATE—Magneto drive oil seal reinforcing..... *See note under "Magneto and Gun Synchronizer Impulse Generator Drives."*	2	2	–	2	2	2	2	2	2	2
24	3006	118811N1	SEAL ASSEMBLY—Magneto drive oil..... *See note under "Magneto and Gun Synchronizer Impulse Generator Drives."*	2	2	2	2	2	2	2	2	2	2
24	3008	120016	GASKET—Magneto drive oil seal..... *See note under "Magneto and Gun Synchronizer Impulse Generator Drives."*	2	2	2	2	2	2	2	2	2	2
24	3010	SD601	SCREW—Magneto drive oil seal or reinforcing plate to supercharger rear cover (Shakeproof) (Wright Part No. 4061D1)..... *Supersedes and supplied for replacement of screw 147D4 and Shakeproof lockwasher 1210.*	12	12	12	12	12	12	12	12	12	12

MAGNETO AND GUN SYNCHRONIZER IMPULSE GENERATOR DRIVES (FOR ENGINES WITH PROVISION FOR ONE GUN DRIVE)

Factory installed on the following engines:
-97 (47467, 72844 to 72869, 72881 to 73154, 80787 to 81234, 81236 to 82197, 82258 to 82306 and 190066 to 190522)

Some engines in this group were equipped with a six piece type oil seal consisting of a collar, plate, spring, seal and two retaining rings. The six piece type oil seal has been superseded by a one piece type used in conjunction with a gasket installed between the seal and the supercharger rear cover. Parts comprising the six piece type are no longer supplied and for replacement of any of these parts the following parts should be used:

Use	Description	Quant.
118811N1	*Seal Assembly—Magneto drive oil*	*1*
120016	*Gasket—Magneto drive oil seal*	*1*

25	3025	27629	GEAR—Magneto and gun synchronizer impulse generator drive.....	–	–	–	–	–	–	–	–	–	2
25	3027	65D15	SCREW—Magneto and gun synchronizer impulse generator drive gear to shaft.....	–	–	–	–	–	–	–	–	–	12
25	3029	412186	SHAFT ASSEMBLY—Magneto and gun synchronizer impulse generator drive (RH)....	–	–	–	–	–	–	–	–	–	1
25	3031	420592	SHAFT ASSEMBLY—Magneto and gun synchronizer impulse generator drive (LH)....	–	–	–	–	–	–	–	–	–	1
		* 68944	SHAFT—Magneto and gun synchronizer impulse generator drive (RH).....	–	–	–	–	–	–	–	–	–	1
		* 120085	SHAFT—Magneto and gun synchronizer impulse generator drive (LH).....	–	–	–	–	–	–	–	–	–	1

Fig. No.	Index Number	Part Number	Nomenclature 1 2 3 4 5 6 7	Units Per Assy—Model R1820 -40 -40B -54 -60 -65 -71 -73 -87 -95 -97

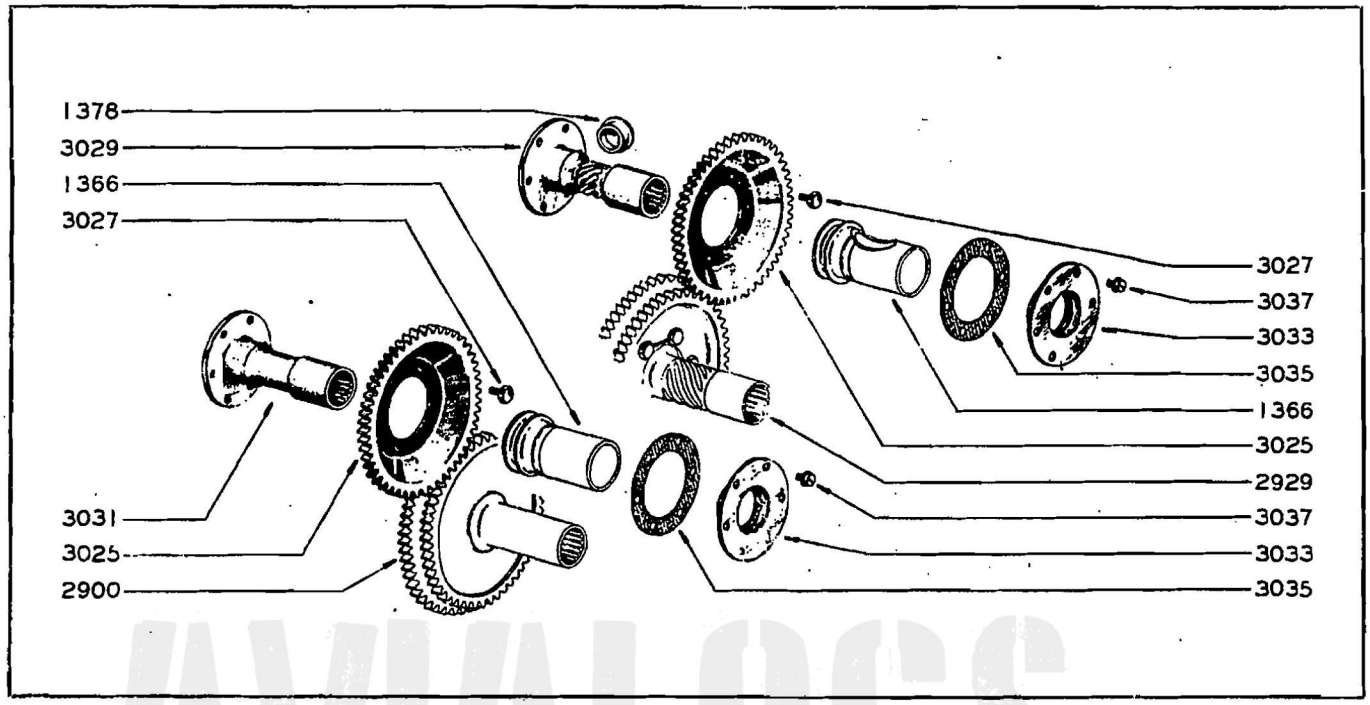

Numbers shown are index numbers and are numerically arranged in the Group Assembly Parts List

Figure 25—Magneto and Gun Synchronizer Impulse Generator Drives (One Gun Drive)

		* 29087	PLUG—Magneto and gun synchronizer impulse generator drive shaft	1
		@ 68928	SPRING—Magneto drive oil seal. *See note under "Magneto and Gun Synchronizer Impulse Generator Drives."*	2
		@ 113742	RING—Magneto drive oil seal retaining, front. *See note under "Magneto and Gun Synchronizer Impulse Generator Drives."*	2
		@ 114984	SEAL—Magneto drive oil. *See note under "Magneto and Gun Synchronizer Impulse Generator Drives."*	2
		@ 68929	RING—Magneto drive oil seal retaining, rear. *See note under "Magneto and Gun Synchronizer Impulse Generator Drives."*	2
		@ 68931	COLLAR—Magneto drive oil seal. *See note under "Magneto and Gun Synchronizer Impulse Generator Drives."*	2
		@ 68933	PLATE—Magneto drive oil seal reinforcing. *See note under "Magneto and Gun Synchronizer Impulse Generator Drives."*	2
25	3033	118811N1	SEAL ASSEMBLY—Magneto drive oil. *See note under "Magneto and Gun Synchronizer Impulse Generator Drives."*	2
25	3035	120016	GASKET—Magneto drive oil seal. *See note under "Magneto and Gun Synchronizer Impulse Generator Drives."*	2
25	3037	SD601	SCREW—Magneto drive oil seal or reinforcing plate to supercharger rear cover (Shakeproof) (Wright Part No. 4061D1)	12

Fig. No.	Index Number	Part Number	Nomenclature 1 2 3 4 5 6 7	Units Per Assy—Model R1820 -40 -40B -54 -60 -65 -71 -73 -87 -95 -97

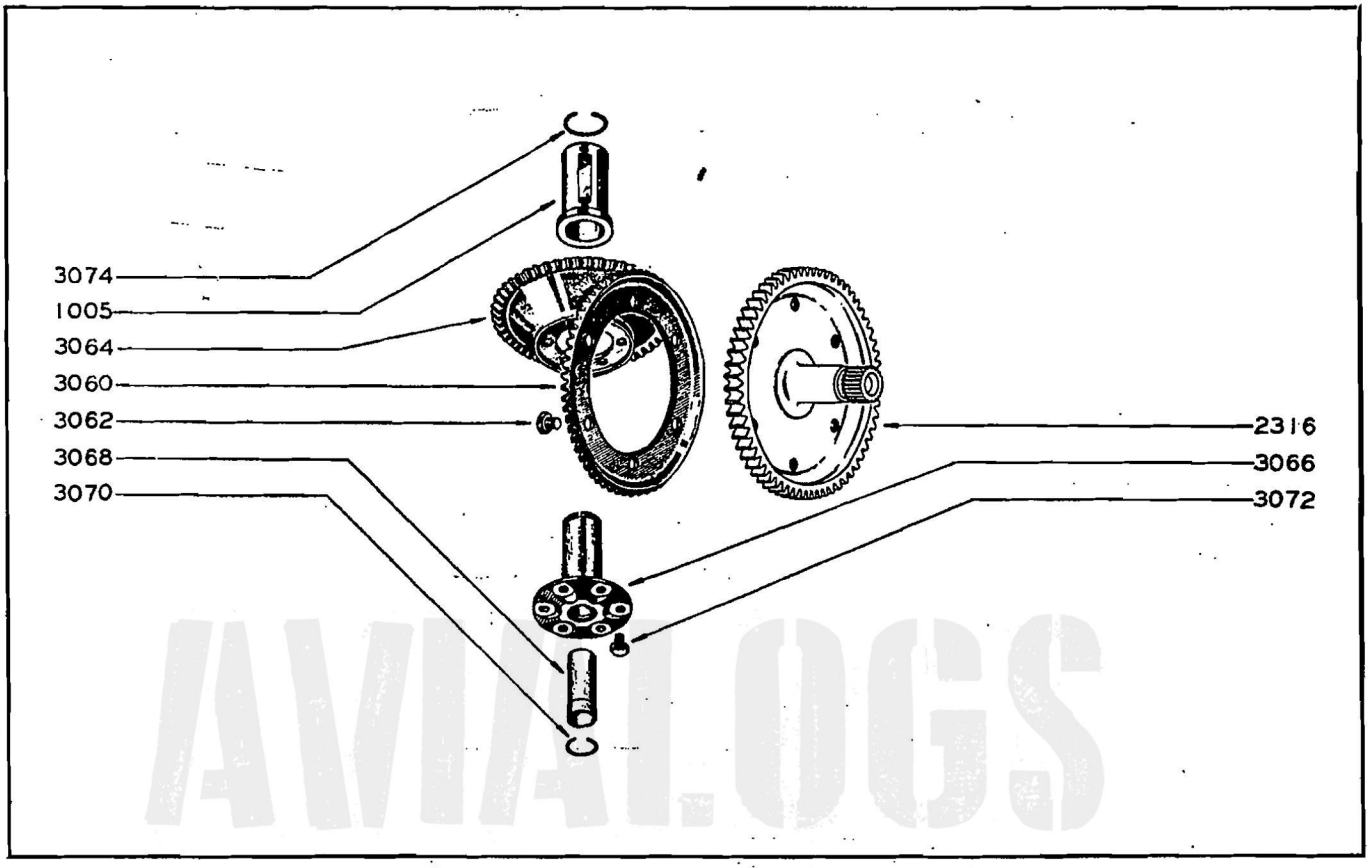

Numbers shown are index numbers and are numerically arranged in the Group Assembly Parts List

Figure 26—Controllable Pitch Propeller Governor Drive

AVIALOGS
WWW.AVIALOGS.COM

CONTROLLABLE PITCH PROPELLER GOVERNOR DRIVE

26	3060	68480	GEAR—Governor driving	1	1	1	1	1	1	1	1	1	1
26	3062	90D31	SCREW—Governor driving gear to intermediate cam drive gear	6	6	6	6	6	6	6	6	6	6
26	3064	68404	GEAR—Governor intermediate drive	1	1	1	1	1	1	1	1	1	1
		420921	SHAFT AND PLUG ASSEMBLY—Governor intermediate drive gear	1	1	1	1	1	1	1	1	1	1
			420921 is the only type supplied for replacement.[1] It includes a plug at the flange end of the shaft and a circlet to retain the plug.										
			420921 is used to replace shaft 111092 which has the hole at the flange end of the shaft left open or in some cases covered by a plate attached to the flange. It also replaces shaft assembly 420956 which includes a plug at the flange end of the shaft and which was used in conjunction with a plate attached to the flange of the shaft.										
			When replacing shafts 111092 or 420956 with shaft 420921, discard plate 120724.										
26	3066	120679	SHAFT—Governor intermediate drive gear	1	1	1	1	1	1	1	1	1	1
26	3068	120678	PLUG—Governor intermediate drive gear shaft	1	1	1	1	1	1	1	1	1	1
26	3070	2019D3	CIRCLET—Governor intermediate drive gear shaft plug retaining	1	1	1	1	1	1	1	1	1	1

Fig. No.	Index Number	Part Number	Nomenclature 1 2 3 4 5 6 7	Units Per Assy—Model R1820 -40	-40B	-54	-60	-65	-71	-73	-87	-95	-97
		120724	PLATE—Governor intermediate drive gear shaft. *Used with shafts 111092 and 420956. Read note under shaft 420921.*	1	1	1	1	1	1	1	1	1	1
26	3072	65D18	SCREW—Governor intermediate drive gear or plate and gear to shaft.....	6	6	6	6	6	6	6	6	6	6
26	3074	64815	CIRCLET—Governor intermediate drive gear shaft.....	1	1	1	1	1	1	1	1	1	1
			DUAL ACCESSORY DRIVE										
		@ 413485	DUAL ACCESSORY DRIVE ASSEMBLY COMPLETE.....	–	1	–	–	–	–	–	–	1	–
			Factory installed on all -40B and -95 engines. 413485 has a small upper and a large lower accessory mounting pad, 12 internal spline on the upper and lower accessory drive gears and a tongued upper accessory drive coupling.										
			For replacement, make the following substitutions:										
			Use — Description — Remove — Quant.										
			414519 — Dual Accessory Drive Assembly Complete — 413485 — 1										
			69655 — Coupling—Dual accessory drive accessory drive, upper — 1										
			67490 — Ring—Dual accessory drive accessory drive upper coupling lock — 1										
		@ 414350	DUAL ACCESSORY DRIVE ASSEMBLY COMPLETE.....	1	–	1	1	1	–	1	–	–	1
			Factory installed on all -40, -65, -73 and -97 engines and on the following engines: -54 (86727 to 86751) -60 (47468, 47469, 73229 to 73279, 73304 to 73429, 73432 to 73820, 88168 to 88196, 155763 to 155817, 156289 to 158093, 183147 to 183464, 425321 to 425935 and 426451 to 426720) *414350 has small upper and lower accessory mounting pads, 12 internal spline on the upper and lower accessory drive gears and a tongued upper and lower accessory drive coupling.*										
			For replacement, make the following substitutions:										
			Use — Description — Remove — Quant.										
			421775 — Dual Accessory Drive Assembly Complete — 414350 — 1										
			414353 — Coupling and Ring Assembly—Dual accessory drive accessory drive, lower — 1										
			69655 — Coupling—Dual accessory drive accessory drive, upper — 1										
			67490 — Ring—Dual accessory drive accessory drive upper and lower coupling lock — 2										
		414519	DUAL ACCESSORY DRIVE ASSEMBLY COMPLETE.....	–	1	1	–	–	1	–	1	1	–
			Factory installed on all -87 engines and on the following engines: -54 (86752 to 86866, 429167 to 429376 and 452267 to 452378) -71 (41442, 41443, 41469 to 41486, 41510 to 41514, 45545 to 45549, 45560, 152650 to 152667, 152772 to 152787, 152802 to 152805, 152810 to										

AVIALOGS
WWW.AVIALOGS.COM

Fig. No.	Index Number	Part Number	Nomenclature 1 2 3 4 5 6 7	Units Per Assy—Model R1820 -40	-40B	-54	-60	-65	-71	-73	-87	-95	-97
			152817, 152824 to 152839, 152842 to 152853 and 152944 to 153085) *414519 has a small upper and a large lower accessory mounting pad and 12 internal spline on the upper and lower accessory drive gears.*										
		414694	DUAL ACCESSORY DRIVE ASSEMBLY COMPLETE..... *Factory installed on the following engines:* *-71* (41296 to 41298, 41418, 41487 to 41506, 44231 to 44241, 44296 to 44307 and 152629 to 152649) *414694 has a small upper and a large lower accessory mounting pad, 16 internal spline on the upper accessory drive gear and six internal spline on the lower accessory drive gear.*	–	–	–	–	–	1	–	–	–	–
		421775	DUAL ACCESSORY DRIVE ASSEMBLY COMPLETE..... *Factory installed on the following engines:* *-60* (73821 to 73914, 80137 to 80279, 155824 to 155879, 425936 to 426450 and 454477 to 455407) *421775 has a small upper and lower accessory mounting pad and 12 internal spline on the upper and lower accessory drive gears.*	1	–	1	1	1	–	1	–	–	1
27, 28	3100	412554	HOUSING STUDDING ASSEMBLY—Dual accessory drive.....	1	1	1	1	1	1	1	1	1	1
		* 412553	HOUSING BUSHING ASSEMBLY—Dual accessory drive.....	1	1	1	1	1	1	1	1	1	1
		* 69089N1	HOUSING—Dual accessory drive..	1	1	1	1	1	1	1	1	1	1
27, 28	3102	64425	BUSHING—Dual accessory drive intermediate shaft, front.....	1	1	1	1	1	1	1	1	1	1
		64425Y1	BUSHING—Same as 64425 except .005 in. OS OD.....	AR	AR	AR	AR	AR	AR	AR	AR	AR	AR
		64425Y2	BUSHING—Same as 64425 except .010 in. OS OD.....	AR	AR	AR	AR	AR	AR	AR	AR	AR	AR
		64425Y3	BUSHING—Same as 64425 except .015 in. OS OD.....	AR	AR	AR	AR	AR	AR	AR	AR	AR	AR
		64425Y6	BUSHING—Same as 64425 except .030 in. OS OD.....	AR	AR	AR	AR	AR	AR	AR	AR	AR	AR
27, 28	3104	64050	BUSHING—Dual accessory drive idler gear, front.....	1	1	1	1	1	1	1	1	1	1
		64050Y1	BUSHING—Same as 64050 except .005 in. OS OD.....	AR	AR	AR	AR	AR	AR	AR	AR	AR	AR
		64050Y2	BUSHING—Same as 64050 except .010 in. OS OD.....	AR	AR	AR	AR	AR	AR	AR	AR	AR	AR
		64050Y3	BUSHING—Same as 64050 except .015 in. OS OD.....	AR	AR	AR	AR	AR	AR	AR	AR	AR	AR
		64050Y6	BUSHING—Same as 64050 except .030 in. OS OD.....	AR	AR	AR	AR	AR	AR	AR	AR	AR	AR
27, 28	3106	64053	BUSHING—Dual accessory drive accessory drive gear, upper, front.....	1	1	1	1	1	1	1	1	1	1
		64053Y1	BUSHING—Same as 64053 except .005 in. OS OD.....	AR	AR	AR	AR	AR	AR	AR	AR	AR	AR
		64053Y2	BUSHING—Same as 64053 except .010 in. OS OD.....	AR	AR	AR	AR	AR	AR	AR	AR	AR	AR
		64053Y3	BUSHING—Same as 64053 except .015 in. OS OD.....	AR	AR	AR	AR	AR	AR	AR	AR	AR	AR
		64053Y6	BUSHING—Same as 64053 except .030 in. OS OD.....	AR	AR	AR	AR	AR	AR	AR	AR	AR	AR
27, 28	3108	64120	BUSHING—Dual accessory drive accessory drive gear, lower, front.....	1	1	1	1	1	1	1	1	1	1
		64120Y1	BUSHING—Same as 64120 except .005 in. OS OD.....	AR	AR	AR	AR	AR	AR	AR	AR	AR	AR
		64120Y2	BUSHING—Same as 64120 except .010 in. OS OD.....	AR	AR	AR	AR	AR	AR	AR	AR	AR	AR
		64120Y3	BUSHING—Same as 64120 except .015 in. OS OD.....	AR	AR	AR	AR	AR	AR	AR	AR	AR	AR

AVIATS
WWW.AVIATS.COM

Fig. No.	Index Number	Part Number	Nomenclature 1 2 3 4 5 6 7	Units Per Assy—Model R1820 -40 -40B -54 -60 -65 -71 -73 -87 -95 -97

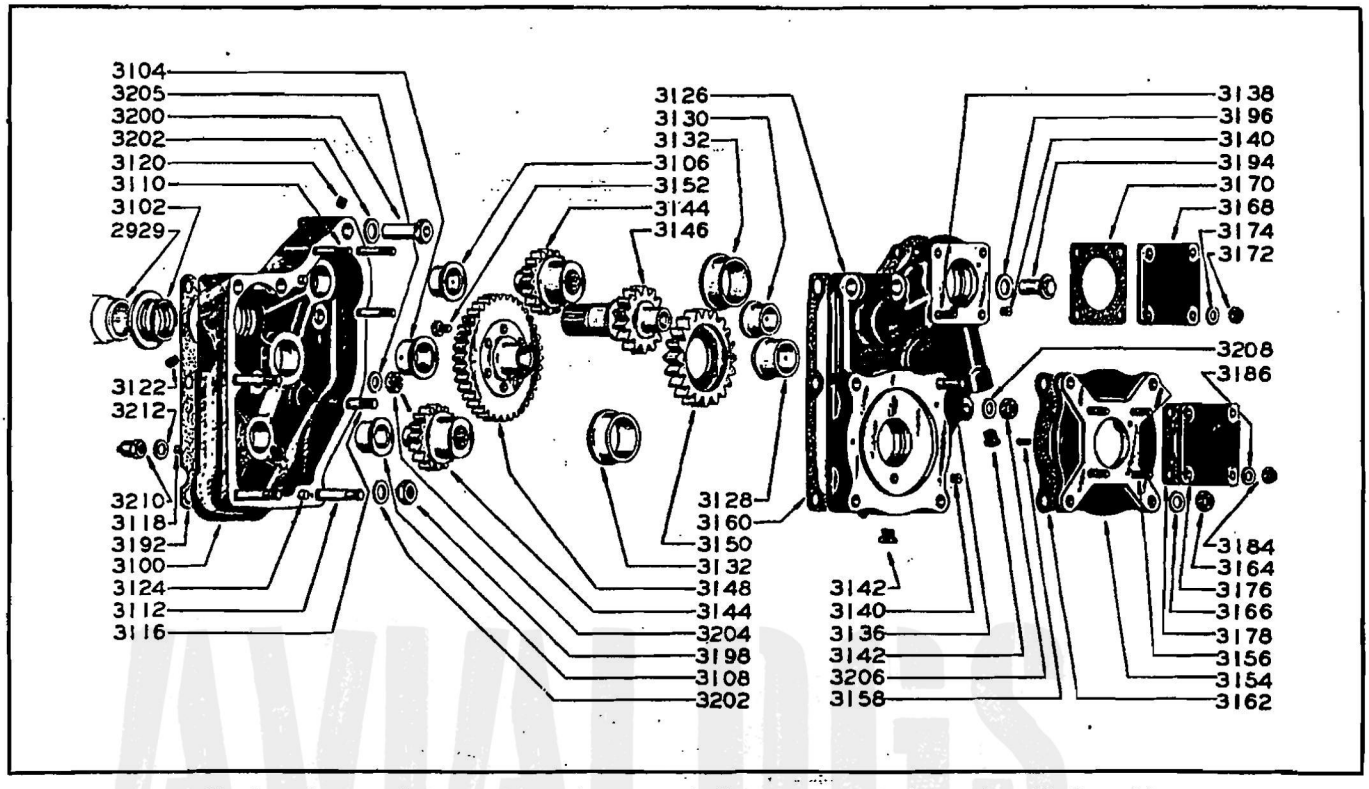

Numbers shown are index numbers and are numerically arranged in the Group Assembly Parts List

Figure 27—Dual Accessory Drive (With Small Accessory Mounting Pads)

		64120Y6	BUSHING—Same as 64120 except .030 in. OS OD	AR	AR	AR	AR	AR	AR	AR	AR	AR	AR
27, 28	3110	¢ 2028D21	STUD—Dual accessory drive housing to upper accessory or substituting cover	3	3	3	3	3	3	3	3	3	3
		2028H21	STUD—Same as 2028D21 except .003 in. OS OD	AR	AR	AR	AR	AR	AR	AR	AR	AR	AR
		2028S21	STUD—Same as 2028D21 except .007 in. OS OD	AR	AR	AR	AR	AR	AR	AR	AR	AR	AR
		2028J21	STUD—Same as 2028D21 except .012 in. OS OD	AR	AR	AR	AR	AR	AR	AR	AR	AR	AR
27	3112	¢ 2030D23	STUD—Dual accessory drive housing to dual accessory drive housing cover flange. *Part of assemblies 414350 and 421775.*	3	–	–	3	3	–	3	–	–	3
		2030H23	STUD—Same as 2030D23 except .003 in. OS OD	AR	–	–	AR	AR	–	AR	–	–	AR
		2030S23	STUD—Same as 2030D23 except .007 in. OS OD	AR	–	–	AR	AR	–	AR	–	–	AR
		2030J23	STUD—Same as 2030D23 except .012 in. OS OD	AR	–	–	AR	AR	–	AR	–	–	AR
28	3114	¢ 2030D23	STUD—Dual accessory drive housing to lower accessory or substituting cover. *Part of assemblies 413485, 414519 and 414694.*	–	3	3	–	–	3	–	3	3	–
		2030H23	STUD—Same as 2030D23 except .003 in. OS OD	–	AR	AR	–	–	AR	–	AR	AR	–
		2030S23	STUD—Same as 2030D23 except .007 in. OS OD	–	AR	AR	–	–	AR	–	AR	AR	–
		2030J23	STUD—Same as 2030D23 except .012 in. OS OD	–	AR	AR	–	–	AR	–	AR	AR	–

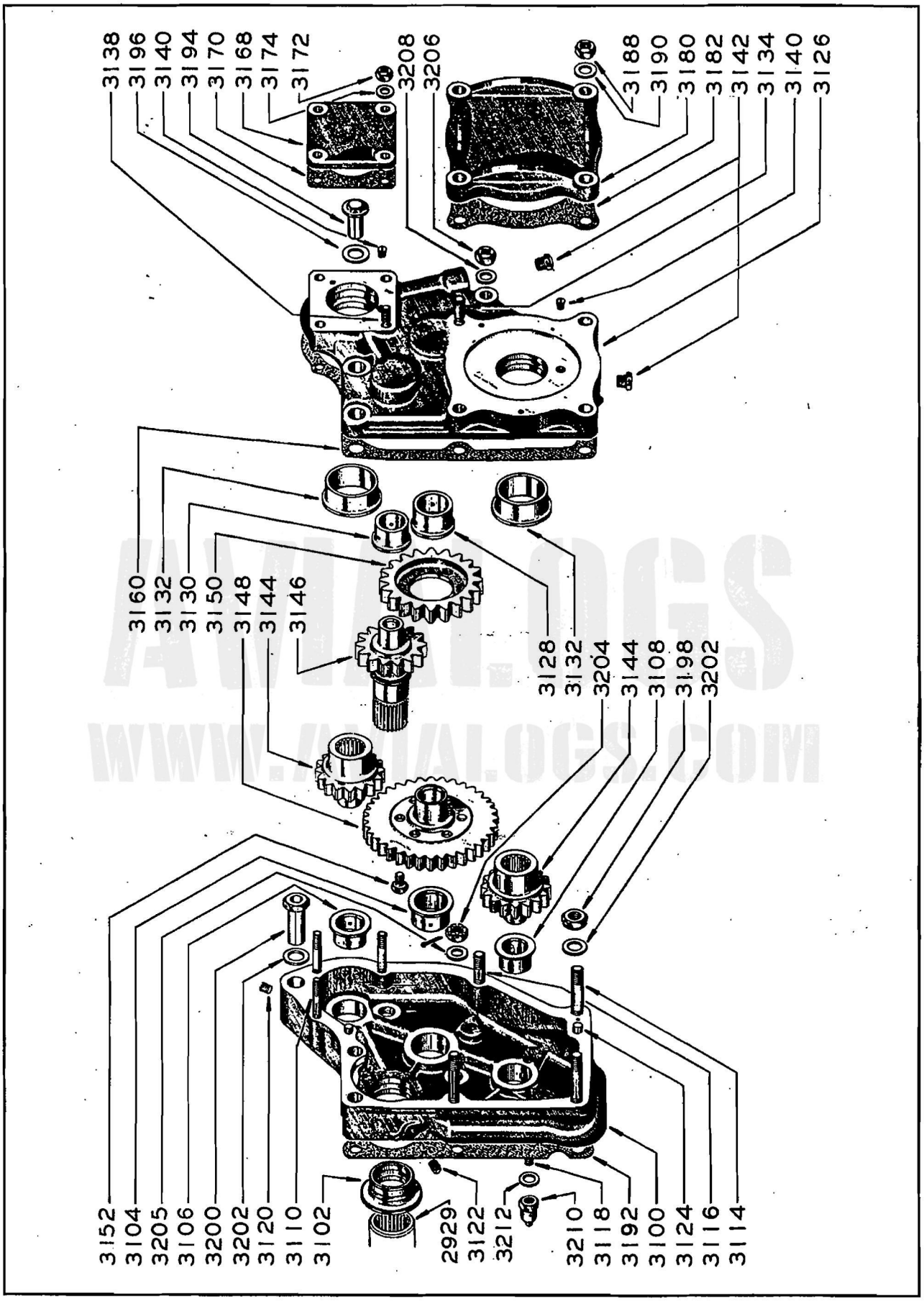

Numbers shown are index numbers and are numerically arranged in the Group Assembly Parts List

Figure 28–Dual Accessory Drive (With a Small Upper and a Large Lower Accessory Mounting Pad)

Fig. No.	Index Number	Part Number	Nomenclature 1 2 3 4 5 6 7	Units Per Assy—Model R1820 -40	-40B	-54	-60	-65	-71	-73	-87	-95	-97
27, 28	3116	¢ 2029D22	STUD—Dual accessory drive housing to dual accessory drive housing cover	1	1	1	1	1	1	1	1	1	1
		2029H22	STUD—Same as 2029D22 except .003 in. OS OD	AR	AR	AR	AR	AR	AR	AR	AR	AR	AR
		2029S22	STUD—Same as 2029D22 except .007 in. OS OD	AR	AR	AR	AR	AR	AR	AR	AR	AR	AR
		2029J22	STUD—Same as 2029D22 except .012 in. OS OD	AR	AR	AR	AR	AR	AR	AR	AR	AR	AR
27, 28	3118	¢ 2029D19	STUD—Dual accessory drive housing to supercharger rear housing	2	2	2	2	2	2	2	2	2	2
		2029H19	STUD—Same as 2029D19 except .003 in. OS OD	AR	AR	AR	AR	AR	AR	AR	AR	AR	AR
		2029S19	STUD—Same as 2029D19 except .007 in. OS OD	AR	AR	AR	AR	AR	AR	AR	AR	AR	AR
		2029J19	STUD—Same as 2029D19 except .012 in. OS OD	AR	AR	AR	AR	AR	AR	AR	AR	AR	AR
27, 28	3120	102D33	PLUG—Dual accessory drive housing oil hole, pipe (.250 in. headless)	1	1	1	1	1	1	1	1	1	1
27, 28	3122	99D12	PLUG—Dual accessory drive housing oil hole, pipe (.250 in. square head)	2	2	2	2	2	2	2	2	2	2
27, 28	3124	29D10	PIN—Dual accessory drive housing cover locating	2	2	2	2	2	2	2	2	2	2
27, 28	3126	412336	COVER STUDDING ASSEMBLY—Dual accessory drive housing	1	1	1	1	1	1	1	1	1	1
		* 411802	COVER BUSHING ASSEMBLY—Dual accessory drive housing	1	1	1	1	1	1	1	1	1	1
		* 69087N1	COVER—Dual accessory drive housing	1	1	1	1	1	1	1	1	1	1
27, 28	3128	64050	BUSHING—Dual accessory drive idler gear, rear	1	1	1	1	1	1	1	1	1	1
		64050Y1	BUSHING—Same as 64050 except .005 in. OS OD	AR	AR	AR	AR	AR	AR	AR	AR	AR	AR
		64050Y2	BUSHING—Same as 64050 except .010 in. OS OD	AR	AR	AR	AR	AR	AR	AR	AR	AR	AR
		64050Y3	BUSHING—Same as 64050 except .015 in. OS OD	AR	AR	AR	AR	AR	AR	AR	AR	AR	AR
		64050Y6	BUSHING—Same as 64050 except .030 in. OS OD	AR	AR	AR	AR	AR	AR	AR	AR	AR	AR
27, 28	3130	64051	BUSHING—Dual accessory drive intermediate shaft, rear	1	1	1	1	1	1	1	1	1	1
		64051Y1	BUSHING—Same as 64051 except .005 in. OS OD	AR	AR	AR	AR	AR	AR	AR	AR	AR	AR
		64051Y2	BUSHING—Same as 64051 except .010 in. OS OD	AR	AR	AR	AR	AR	AR	AR	AR	AR	AR
		64051Y3	BUSHING—Same as 64051 except .015 in. OS OD	AR	AR	AR	AR	AR	AR	AR	AR	AR	AR
		64051Y6	BUSHING—Same as 64051 except .030 in. OS OD	AR	AR	AR	AR	AR	AR	AR	AR	AR	AR
27, 28	3132	66414	BUSHING—Dual accessory drive accessory drive gear upper and lower, rear	2	2	2	2	2	2	2	2	2	2
		66414Y1	BUSHING—Same as 66414 except .005 in. OS OD	AR	AR	AR	AR	AR	AR	AR	AR	AR	AR
		66414Y2	BUSHING—Same as 66414 except .010 in. OS OD	AR	AR	AR	AR	AR	AR	AR	AR	AR	AR
		66414Y3	BUSHING—Same as 66414 except .015 in. OS OD	AR	AR	AR	AR	AR	AR	AR	AR	AR	AR
		66414Y6	BUSHING—Same as 66414 except .030 in. OS OD	AR	AR	AR	AR	AR	AR	AR	AR	AR	AR
28	3134	¢ 126D177	STUD—Dual accessory drive housing cover to lower accessory or substituting cover. *Part of assemblies 413485, 414519 and 414694.*	-	1	1	-	-	1	-	1	1	-
		126H177	STUD—Same as 126D177 except .003 in. OS OD	-	AR	AR	-	-	AR	-	AR	AR	-
		126S177	STUD—Same as 126D177 except .007 in. OS OD	-	AR	AR	-	-	AR	-	AR	AR	-
		126J177	STUD—Same as 126D177 except .012 in. OS OD	-	AR	AR	-	-	AR	-	AR	AR	-

Fig. No.	Index Number	Part Number	Nomenclature 1 2 3 4 5 6 7	Units Per Assy—Model R1820 -40	-40B	-54	-60	-65	-71	-73	-87	-95	-97
27	3136	¢ 126D177	STUD—Dual accessory drive housing cover to housing cover flange..... *Part of assemblies 414350 and 421775.*	1	–	1	1	1	–	1	–	–	1
		126H177	STUD—Same as 126D177 except .003 in. OS OD.....	AR	–	AR	AR	AR	–	AR	–	–	AR
		126S177	STUD—Same as 126D177 except .007 in. OS OD.....	AR	–	AR	AR	AR	–	AR	–	–	AR
		126J177	STUD—Same as 126D177 except .012 in. OS OD.....	AR	–	AR	AR	AR	–	AR	–	–	AR
27, 28	3138	¢ 126D169	STUD—Dual accessory drive housing cover to upper accessory or substituting cover.....	1	1	1	1	1	1	1	1	1	1
		126H169	STUD—Same as 126D169 except .003 in. OS OD.....	AR	AR	AR	AR	AR	AR	AR	AR	AR	AR
		126S169	STUD—Same as 126D169 except .007 in. OS OD.....	AR	AR	AR	AR	AR	AR	AR	AR	AR	AR
		126J169	STUD—Same as 126D169 except .012 in. OS OD.....	AR	AR	AR	AR	AR	AR	AR	AR	AR	AR
27, 28	3140	102D33	PLUG—Dual accessory drive housing cover oil hole, pipe (.250 in. headless).....	2	2	2	2	2	2	2	2	2	2
27, 28	3142	4042D1	PLUG—Dual accessory drive housing cover oil hole, pipe (.125 in. hex head).....	2	2	2	2	2	2	2	2	2	2
27, 28	3144	110169	GEAR—Dual accessory drive accessory drive, upper and lower (12 spline)..... *Part of assemblies 413485, 414350, 414519 and 421775.*	2	2	2	2	2	2	2	2	2	2
		66413	GEAR—Dual accessory drive accessory drive, upper (16 spline)..... *Part of assembly 414694.*	–	–	–	–	–	1	–	–	–	–
		64031	GEAR—Dual accessory drive accessory drive, lower (six spline)..... *Part of assembly 414694.*	–	–	–	–	–	1	–	–	–	–
		69655	COUPLING—Dual accessory drive accessory drive upper gear..... *Part of assemblies 413485 and 414350.*	1	1	–	1	1	–	1	–	1	1
		67490	RING—Dual accessory drive accessory drive upper gear coupling lock..... *Part of assemblies 413485 and 414350.*	1	1	–	1	1	–	1	–	1	1
		414353	COUPLING AND RING ASSEMBLY—Dual accessory drive accessory drive lower gear..... *Part of assembly 414350.*	1	–	–	1	1	–	1	–	–	1
		* 111862	COUPLING—Dual accessory drive accessory drive lower gear.....	1	–	–	1	1	–	1	–	–	1
		* 111880	RING—Dual accessory drive accessory drive lower gear coupling reinforcing.....	1	–	–	1	1	–	1	–	–	1
		* 18D28	RIVET—Dual accessory drive accessory drive lower gear coupling reinforcing ring to coupling.....	1	–	–	1	1	–	1	–	–	1
		67490	RING—Dual accessory drive accessory drive lower gear coupling lock..... *Part of assembly 414350.*	1	–	–	1	1	–	1	–	–	1
27, 28	3146	68221	SHAFT—Dual accessory drive intermediate.	1	1	1	1	1	1	1	1	1	1
27, 28	3148	64029	GEAR—Dual accessory drive idler.....	1	1	1	1	1	1	1	1	1	1
27, 28	3150	68222	GEAR—Dual accessory drive intermediate..	1	1	1	1	1	1	1	1	1	1
27, 28	3152	65D15	SCREW—Dual accessory drive idler gear to intermediate gear.....	6	6	6	6	6	6	6	6	6	6
27	3154	413047	FLANGE STUDDING ASSEMBLY—Dual accessory drive housing cover..... *Part of assemblies 414350 and 421775.*	1	–	1	1	1	–	1	–	–	1
		* 110048N2	FLANGE—Dual accessory drive housing cover.....	1	–	1	1	1	–	1	–	–	1
27	3156	¢ 2144D85	STUD—Dual accessory drive housing cover flange to lower accessory or substituting cover.....	4	–[b]	4	4	4	–	4	–	–	4
		2144H85	STUD—Same as 2144D85 except .003 in. OS OD.....	AR	–	AR	AR	AR	–	AR	–	–	AR

Fig. No.	Index Number	Part Number	Nomenclature 1 2 3 4 5 6 7	Units Per Assy—Model R1820 -40	-40B	-54	-60	-65	-71	-73	-87	-95	-97
		2144S85	STUD—Same as 2144D85 except .007 in. OS OD	AR	–	AR	AR	AR	–	AR	–	–	AR
		2144J85	STUD—Same as 2144D85 except .012 in. OS OD	AR	–	AR	AR	AR	–	AR	–	–	AR
		* 20D10	PIN—Dual accessory drive housing cover flange oil hole, plugging	1	–	1	1	1	–	1	–	–	1
27	3158	13D23	PIN—Dual accessory drive housing cover flange locating	1	–	1	1	1	–	1	–	–	1
		120028	PLATE—Dual accessory drive housing cover flange caution	1	–	1	1	1	–	1	–	–	1
		AN425-A4-7	RIVET—Dual accessory drive housing cover flange caution plate to flange (Wright Part No. 18D17)	1	–	1	1	1	–	1	–	–	1
27, 28	3160	69756	GASKET—Dual accessory drive housing cover	1	1	1	1	1	1	1	1	1	1
27	3162	64130	GASKET—Dual accessory drive housing cover flange *Part of assemblies 414350 and 421775.*	1	–	1	1	1	–	1	–	–	1
27	3164	4040D5	NUT—Dual accessory drive housing cover flange to cover *Part of assemblies 414350 and 421775.* *Supersedes and supplied for replacement of nut 2D4 and palnut 356-524 installed on some engines.*	4	–	4	4	4	–	4	–	–	4
27	3166	34D33	WASHER—Dual accessory drive housing cover flange to cover *Part of assemblies 414350 and 421775.*	4	–	4	4	4	–	4	–	–	4
		@ 28922	COVER—Upper accessory substituting (early type) *Superseded by 28922N3.*	1	1	1	1	1	1	1	1	1	1
27, 28	3168	28922N3	COVER—Upper accessory substituting (late type)	1	1	1	1	1	1	1	1	1	1
27, 28	3170	69072	GASKET—Upper accessory or substituting cover	1	1	1	1	1	1	1	1	1	1
27, 28	3172	4040D4	NUT—Upper accessory or substituting cover to dual accessory drive housing cover	4	4	4	4	4	4	4	4	4	4
27, 28	3174	34D51	WASHER—Upper accessory or substituting cover to dual accessory drive housing cover	4	4	4	4	4	4	4	4	4	4
		@ 28922	COVER—Lower accessory substituting (early type) *Part of assemblies 414350 and 421775.* *Superseded by 28922N3.*	1	–	1	1	1	–	1	–	–	1
27	3176	28922N3	COVER—Lower accessory substituting (late type)	1	–	1	1	1	–	1	–	–	1
27	3178	69072	GASKET—Lower accessory or substituting cover *Part of assemblies 414350 and 421775.*	1	–	1	1	1	–	1	–	–	1
28	3180	66235	COVER—Lower accessory substituting *Part of assemblies 413485, 414519 and 414694.*	–	1	1	–	–	1	–	1	1	–
28	3182	64130	GASKET—Lower accessory or substituting cover *Part of assemblies 413485, 414519 and 414694.*	–	1	1	–	–	1	–	1	1	–
27	3184	4040D4	NUT—Lower accessory or substituting cover to dual accessory drive housing cover flange (.250 in.-28) *Part of assemblies 414350 and 421775.*	4	–	4	4	4	–	4	–	–	4
27	3186	34D51	WASHER—Lower accessory or substituting cover to dual accessory drive housing cover flange (.266 in. x .500 in. x .047 in.) *Part of assemblies 414350 and 421775.*	4	–	4	4	4	–	4	–	–	4
28	3188	4040D5	NUT—Lower accessory or substituting cover to dual accessory drive housing cover (.313 in.-24) *Part of assemblies 413485, 414519 and 414694.*	–	4	4	–	–	4	–	4	4	–

Fig. No.	Index Number	Part Number	Nomenclature 1 2 3 4 5 6 7	Units Per Assy—Model R1820 -40	-40B	-54	-60	-65	-71	-73	-87	-95	-97
28	3190	34D33	WASHER—Lower accessory or substituting cover to dual accessory drive housing cover (.328 in. x .625 in. x .063 in.).... *Part of assemblies 413485, 414519 and 414694.*	–	4	4	–	–	4	–	4	4	–
27, 28	3192	66201	GASKET—Dual accessory drive housing to supercharger rear cover.....	1	1	1	1	1	1	1	1	1	1
27, 28	3194	124D82	NUT—Dual accessory drive housing to supercharger rear cover (plain hex).....	2	2	2	2	2	2	2	2	2	2
27, 28	3196	27D159	WASHER—Dual accessory drive housing to supercharger rear cover (.453 in. x .750 in. x .063 in.).....	2	2	2	2	2	2	2	2	2	2
27, 28	3198	124D81	NUT—Dual accessory drive housing to supercharger rear housing stud (short).....	2	2	2	2	2	2	2	2	2	2
27, 28	3200	124D112	NUT—Dual accessory drive housing to supercharger rear housing stud (long).....	1	1	1	1	1	1	1	1	1	1
27, 28	3202	27D159	WASHER—Dual accessory drive housing to supercharger rear housing stud (.453 in. x .750 in. x .063 in.).....	3	3	3	3	3	3	3	3	3	3
27, 28	3204	1D4	NUT—Dual accessory drive housing to supercharger rear cover (slotted).....	2	2	2	2	2	2	2	2	2	2
27, 28	3205	34D33	WASHER—Dual accessory drive housing to supercharger rear cover (.328 in. x .625 in. x .063 in.).....	2	2	2	2	2	2	2	2	2	2
		57D1	COTTER PIN—Dual accessory drive housing to supercharger rear cover nut.....	2	2	2	2	2	2	2	2	2	2
27, 28	3206	4040D5	NUT—Dual accessory drive housing cover to dual accessory drive housing.....	1	1	1	1	1	1	1	1	1	1
27, 28	3208	34D33	WASHER—Dual accessory drive housing cover to dual accessory drive housing..	1	1	1	1	1	1	1	1	1	1
27, 28	3210	124D58	NUT—Dual accessory drive housing to supercharger rear housing (acorn).....	2	2	2	2	2	2	2	2	2	2
27, 28	3212	27D220 (27D107)	WASHER—Dual accessory drive housing to supercharger rear housing..... *Supersedes 27D107.*	2	2	2	2	2	2	2	2	2	2

AVIALOGS
WWW.AVIALOGS.COM

Fig. No.	Index Number	Part Number	Nomenclature 1 2 3 4 5 6 7	Per Engine	Quantity Used Per Assembly
					4 4 4 4 4 4 4 4 4 4 4 4
					1 1 1 1 1 1 1 1 2 2 2 2
					4 5 5 8 4 6 6 8 1 1 1 1
					0 8 8 6 2 1 1 6 3 4 8 9
					0 6 6 0 3 1 1 0 9 0 9 0
					8 8 6 3 3 0 6 7 3 3 9 1

CRANKSHAFT, PROPELLER SHAFT AND REDUCTION GEAR

CRANKSHAFT

Worn crankpins can be reground to .010 in. undersize. Crankpins can be be reground an additional .010 in. undersize if crankshafts are returned to the factory to have new crankshaft rear halves with .015 in. undersize clamping diameters fitted to the crankshaft front halves.

@ 414008 CRANKSHAFT MACHINING AND BALANCING ASSEMBLY— (Non breather type)..... 1

Factory installed on the following engines:

-65 (29898 to 29997, 30030 to 30045, 41102 to 41122 and 41124 to 41133)

Superseded by 421899.

@ 415868 CRANKSHAFT MACHINING AND BALANCING ASSEMBLY— (Non breather type)..... 1

Factory installed on all -73 engines and on the following engines:

-65 (29347; 30018 to 30029, 30046 to 30050, 41136 to 41267, 44242 to 44295, 44311 to 45368, 45386, 45387, 45394, 45429 to 45446, 45454 to 45474 and 45939 to 46004)

-71 (41296 to 41298, 41418, 41487 to 41506, 44231 to 44241 and 44296 to 44307)

-97 (81105 to 81124)

Superseded by 421899.

@ 415866 CRANKSHAFT MACHINING AND BALANCING ASSEMBLY— (Non breather type)..... 1

Factory installed on the following engines:

-54 (86727)

-65 (45369 to 45386, 45395 to 45399, 45447 to 45453 and 46005 to 47456)

-71 (41442, 41443, 41469 to 41486, 41510 to 41514, 45545 to 45549, 45560, 152629 to 152667, 152772 to 152787, 152802 to 152805, 152810 to 152817, 152824 to 152839, 152842 to 152853 and 152944 to 152995)

-97 (69425 to 72374, 72400 to 72639, 72701 to 72966, 73027 to 73059, 80787 to 80851, 80909 to 80989, 81017 to 81104, 81125 to 81234, 81236 to 81284, 81325 to 81339, 81378 to 81580, 82300 to 82306 and 190066 to 190076)

Superseded by 421899.

@ 418603 CRANKSHAFT MACHINING AND BALANCING ASSEMBLY— (Non breather type)..... 1

Factory installed on the following engines:

-71 (152996 to 153055 and 153085)

-97 (47467, 72375 to 72399, 72640 to 72700, 72967 to 73026, 73060 to 73154, 80852 to 80908, 80990 to 81016, 81285 to 81324, 81340 to 81377, 81581 to 82299, 190077 to 190277, 190293 to 190360, 190370 to 190378, 190405 to 190420, 190430 to 190478, 190483 to 190508 and 190515 to 190522)

Superseded by 421899.

@ 414233 CRANKSHAFT MACHINING AND BALANCING ASSEMBLY— (Breather type)..... 1

Factory installed on the following engines:

-40 (31651 to 31668 and 31676 to 31709)

Fig. No.	Index Number	Part Number	Nomenclature 1 2 3 4 5 6 7	Per Engine	414008	415868	415866	418603	414233	416110	416116	418607	421393	421403	421899	421901
			-95 (31732, 31733, 31741 to 31748 and 31750 to 31752) *Superseded by 421901.*													
		@ 416110	CRANKSHAFT MACHINING AND BALANCING ASSEMBLY—(Breather type).............. *Factory installed on all -40B engines and on the following engines:* *-40* (94528 to 94567, 152790 to 152799, 152818 to 152820 and 152854 to 152943) *-60* (47468, 47469, 73432 to 73500, 73538 to 73546, 88168 to 88196, 155763 to 155803, 155824 to 155865, 156289 to 156706, 156767 to 156957, 156998 to 157046, 157127 to 157206, 157875 to 157892 and 426451 to 426714) *-87* (47457 to 47466, 73155 to 73228, 73280 to 73303, 79867 to 80136, 80302 to 80360, 86997 to 87532, 87546 to 87857, 88098 to 88117, 88138 to 88167, 93880 to 94326, 94339 to 94388, 94439 to 94459, 152491 to 152511, 152541 to 152554, 152821 to 152823, 153086 to 153105 and 183086 to 183111) *-95* (30373 to 80376). *Superseded by 421901.*	1												
		@ 416116	CRANKSHAFT MACHINING AND BALANCING ASSEMBLY—(Breather type).............. *Factory installed on the following engines:* *-40* (31669 to 31674, 31710 to 31722, 45777 to 45876, 45879 to 45928 and 45932 to 45934) *-95* (31805, 31812, 31814, 31818 and 31823) *Superseded by 421901.*	1												
		@ 418607	CRANKSHAFT MACHINING AND BALANCING ASSEMBLY—(Breather type).............. *Factory installed on the following engines:* *-60* (73501 to 73537, 73547 to 73710, 73738 to 73741, 73745 to 73758, 73770, 73771, 73791 to 73808, 73865 to 73877, 73885, 80167, 80209 to 80211, 80237 to 80241, 155804 to 155817, 155866 to 155879, 156707 to 156766, 156958 to 156997, 157047 to 157126, 157207 to 157874, 157893 to 158093, 183147 to 183464, 425321 to 425456, 425478 to 425482, 425503 to 425512, 425542 to 425549, 425573 to 425720, 425747 to 425754, 425766 to 425870, 425900 to 425905, 425940 to 425943, 425951, 425957, 425973, 426018 to 426025, 426027 to 426029, 426032 to 426035, 426051 to 426058, 426121 to 426222, 426327 to 426429, 426444 to 426450, 426715 to 426720, 454540 to 454543, 454563 to 454573, 454587 to 454765 and 454782 to 454878) *-87* (88118 to 88137, 94327 to 94338, 94389 to 94438, 94460 to 94527, 94568 to 94577, 152512 to 152540, 152555, 153106 to 153194, 153207 to 153210, 183060 to 183085, 183112 to 183146, 189949 to 190005, 190034 to 190039 and 190043) *Superseded by 421901.*	1												
		@ 421393	CRANKSHAFT MACHINING AND BALANCING ASSEMBLY—(Non breather type)........... *Factory installed on the following engines:* *-54* (86769 to 86793) *-71* (153056 to 153065) *-97* (190278 to 190292, 190361 to 190369, 190379 to 190405, 190421 to 190429, 190479 to 190482 and 190509 to 190514) *Superseded by 421899.*	1												

AVIALOGS
www.avialogs.com

Fig. No.	Index Number	Part Number	Nomenclature 1 2 3 4 5 6 7	Per Engine	Quantity Used Per Assembly
		@ 421403	CRANKSHAFT MACHINING AND BALANCING ASSEMBLY—(Breather type).....	1	
			Factory installed on the following engines:		
			-60 (73711 to 73737, 73742 to 73744, 73759 to 73769, 73772 to 73790, 73809 to 73864, 73878 to 73884, 73886 to 73914, 80137 to 80166, 80168 to 80208, 80212 to 80226, 425457 to 425477, 425483 to 425502, 425513 to 425541, 425550 to 425572, 425721 to 425746, 425753 to 425765, 425871 to 425899, 425906 to 425939, 425944 to 425950, 425952 to 425956, 425958 to 425972, 425974 to 426017, 426026, 426030, 426031, 426036 to 426050, 426059 to 426120, 426223 to 426326, 426430 to 426443, 454477 to 454539, 454544 to 454562 and 454574 to 454586)		
			-87 (153195 to 153206, 190006 to 190033, 190040 to 190042 and 190044 to 190035)		
			Superseded by 421901.		
29	3250	421899	CRANKSHAFT MACHINING AND BALANCING ASSEMBLY—(Non breather type).....	1	4 4 4 4 4 4 4 4 4 4 4 4 1 1 1 1 1 1 1 1 2 2 2 2 4 5 5 8 4 6 6 8 1 1 1 1 0 8 8 6 2 1 1 6 3 4 8 9 0 6 6 0 3 1 1 0 9 0 9 0 8 8 6 3 3 0 6 7 3 3 9 1
			Factory installed on the following engines:		
			-54 (86728 to 86768, 86794 to 86866, 429167 to 429376 and 452267 to 452378)		
			-71 (153066 to 153075)		

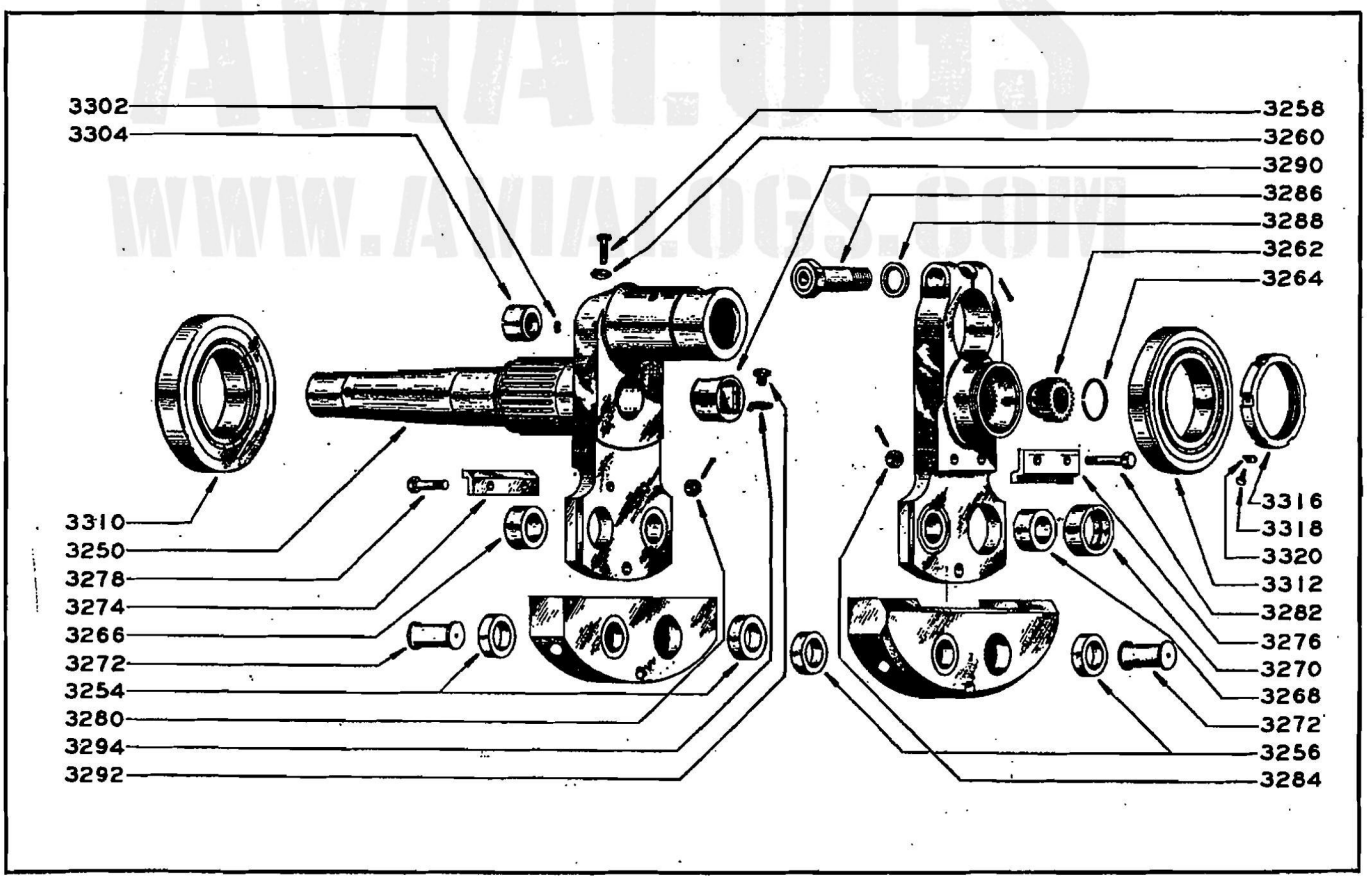

Numbers shown are index numbers and are numerically arranged in the Group Assembly Parts List

Figure 29—Crankshaft (Without Breather)

Fig. No.	Index Number	Part Number	Nomenclature 1 2 3 4 5 6 7	Per Engine	Quantity Used Per Assembly											
					4 1 4 0 0 8	4 1 5 8 6	4 1 5 8 6	4 1 8 6 0 3	4 1 4 2 3 3	4 1 6 1 1 0	4 1 6 1 6	4 1 6 0 7	4 2 1 3 9 3	4 2 1 4 0 3	4 2 1 8 9 9	4 2 1 9 0 1
30	3252	421901	CRANKSHAFT MACHINING AND BALANCING ASSEMBLY—(Breather type)..... *Factory installed on the following engines: -60 (80227 to 80236, 80242 to 80279, 454766 to 454781 and 454879 to 455407)*	1												
		* 413909	COUNTERWEIGHT AND BUSHING ASSEMBLY—Front.....	1	1	1		-	1	-	1	-	-	-	-	-
		* 417885	COUNTERWEIGHT AND BUSHING ASSEMBLY—Front.....	1	-	-	1	1	-	1	-	1	1	1	1	1
		* 67469	COUNTERWEIGHT—Front	1	1	1	-	-	1	-	1	-	-	-	-	-
		* 116147	COUNTERWEIGHT—Front	1	-	-	1	1	-	1	-	1	1	1	1	1
29, 30	3254	111205	BUSHING—Front counterweight.....	4	4	4	4	4	4	4	4	4	4	4	4	4

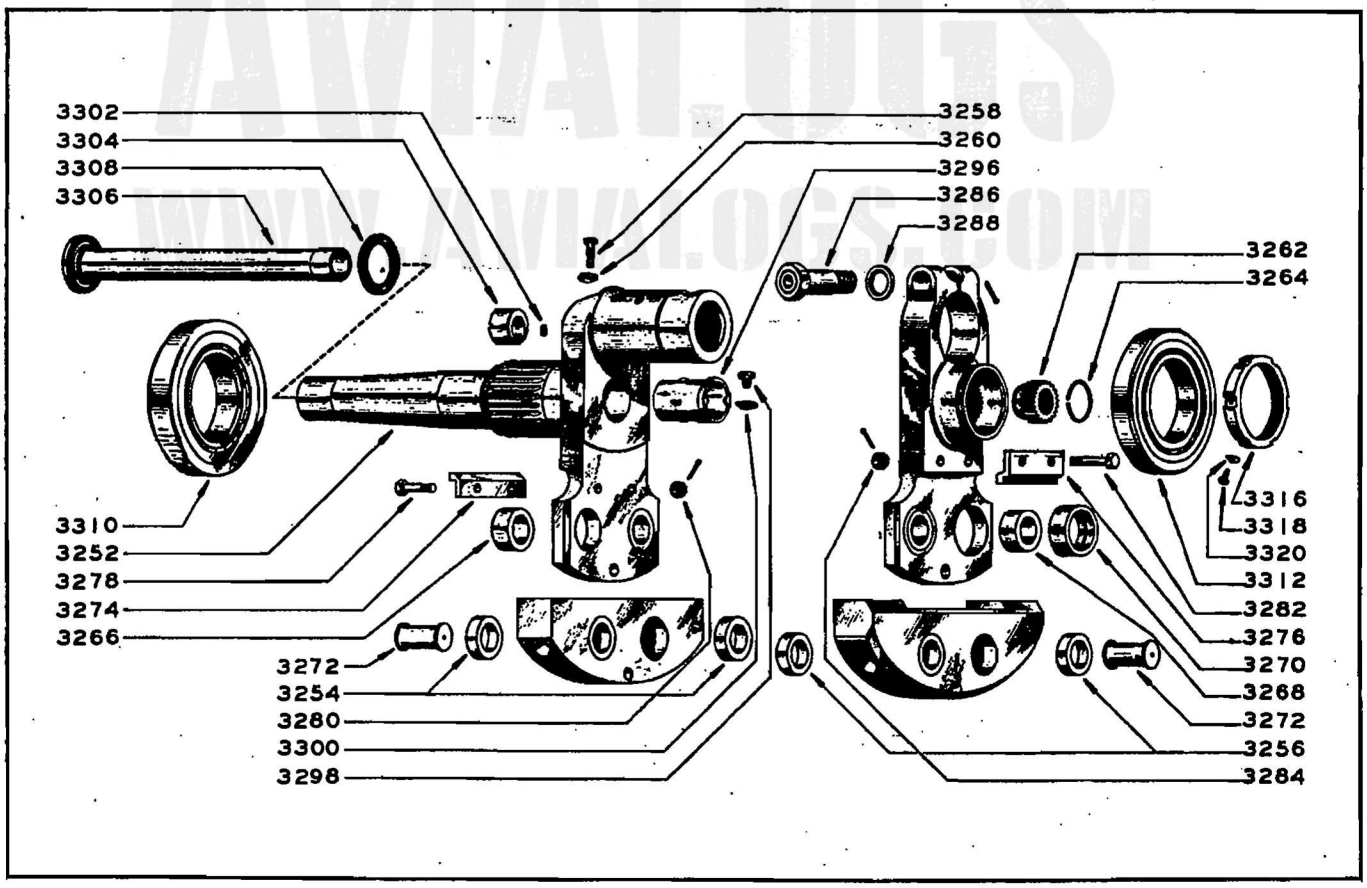

Numbers shown are index numbers and are numerically arranged in the Group Assembly Parts List

Figure 30—Crankshaft (With Breather)

Fig. No.	Index Number	Part Number	Nomenclature 1 2 3 4 5 6 7	Quantity Used: Per Engine	Per Assembly: 414008	415868	415866	418603	414233	416110	416116	418607	421393	421403	421899	421901
		* 414007	COUNTERWEIGHT AND BUSHING ASSEMBLY—Rear	1	1	1	–	–		–	1	–	–	–	–	–
		* 417887	COUNTERWEIGHT AND BUSHING ASSEMBLY—Rear	1	–	–	1	1	–	1	–	1	1	1	1	1
		* 68860	COUNTERWEIGHT—Rear	1	1	1	–	–	1	–	1	–	–	–	–	–
		* 116132	COUNTERWEIGHT—Rear	1	–	–	1	1	–	1	–	1	1	1	1	1
29, 30	3256	111203	BUSHING—Rear counterweight	4	4	4	4	4	4	4	4	4	4	4	4	4
		2178D4	SCREW—Crankshaft crankpin oil metering (No. 51). *Supersedes 2165D4 and 418482N11.*	1	1	–	–	–	1	–	–	–	–	–	–	–
		2178D11	SCREW—Crankshaft crankpin oil metering (No. 50). *Supersedes 418482N5.*	1	–	1	1	1	–	1	1	1	–	–	–	–
29, 30	3258	2178D10	SCREW—Crankshaft crankpin oil metering (No. 37)	1	–	–	–	–	–	–	–	–	1	1	1	1
29, 30	3260	2067D2	LOCKWASHER—Crankpin oil retaining plug and oil metering screw	1	1	1	1	1	1	1	1	1	1	1	1	1
		@ 67367	COUPLING—Accessory drive and starter shaft (1.20 in. long). *For replacement, make the following substitutions:*	1	1	–	–	–	1	–	–	–	–	–	–	

Use	Description	Remove	Quant.
113573	*Coupling—Accessory drive and starter shaft*	*67367*	*1*
2019D19	*Circlet — Accessory drive and starter shaft coupling retaining*		*1*

Fig. No.	Index Number	Part Number	Nomenclature	Per Engine	414008	415868	415866	418603	414233	416110	416116	418607	421393	421403	421899	421901
29, 30	3262	113573	COUPLING—Accessory drive and starter shaft (1.26 in. long)	1	–	1	1	1	–	1	1	1	1	1	1	1
29, 30	3264	2019D19	CIRCLET—Accessory drive and starter shaft coupling retaining	1	–	1	1	1	–	1	1	1	1	1	1	1
		* 68367	CRANKSHAFT—Front end	1	1	–	–	–	1	–	–	–	–	–	–	–
		* 113579	CRANKSHAFT—Front end	1	–	1	–	–	–	–	1	–	–	–	–	–
		* 113957	CRANKSHAFT—Front end	1	–	–	1	–	–	1	–	–	–	–	–	–
		* 117100	CRANKSHAFT—Front end	1	–	–	–	1	–	–	–	1	–	–	–	–
		* 126739	CRANKSHAFT—Front end	1	–	–	–	–	–	–	–	–	1	1	1	1
		* 111345	CRANKSHAFT—Rear end	1	1	–	–	–	1	–	–	–	–	–	–	–
		* 113587	CRANKSHAFT—Rear end	1	–	1	–	–	–	–	1	–	–	–	–	–
		* 113507	CRANKSHAFT—Rear end	1	–	–	1	1	–	1	–	1	–	–	–	–
		* 118916	CRANKSHAFT—Rear end	1	–	–	–	–	–	–	–	–	1	1	–	–
		* 128569	CRANKSHAFT—Rear end	1	–	–	–	–	–	–	–	–	–	–	1	1
29, 30	3266	111204	BUSHING—Front counterweight (in crankshaft)	2	2	2	2	2	2	2	2	2	2	2	2	2
29, 30	3268	113692	BUSHING—Rear counterweight (in crankshaft)	2	2	2	2	2	2	2	2	2	2	2	2	2
29, 30	3270	111206	BEARING—Rear counterweight (in crankshaft)	2	2	2	2	2	2	2	2	2	2	2	2	2
		@ 68778	PIN—Crankshaft front and rear counterweight (early type). *Superseded by 118684.*	4	4	4	–	–	4	–	4	–	–	–	–	–

AVIALOGS
WWW.AVIALOGS.COM

Fig. No.	Index Number	Part Number	Nomenclature 1 2 3 4 5 6 7	Per Engine	Quantity Used Per Assembly 4104-0808	4115-0866	4158-0866	4186-0863	4214-2263	4216-1163	4216-1663	4218-0763	4223-1263	4241-1163	4248-9963	4291-0163
29, 30	3272	118684	PIN—Crankshaft front and rear counterweight (late type)..	4	–	–	4	4	–	4	–	4	4	4	4	4
29, 30	3274	67466	STOP—Crankshaft front counterweight.....	1	1	1	1	1	1	1	1	1	1	1	1	1
		67460	STOP—Crankshaft rear counterweight..... *67460 has a lip .176 in. wide along the edge nearest the attaching holes.*	1	1	1	–	–	1	–	1	–	–	–	–	–
29, 30	3276	113571	STOP—Crankshaft rear counterweight..... *113571 has no lip along the edge nearest the attaching holes.*	1	–	–	1	1	–	1	–	1	1	1	1	1
29, 30	3278	82D16	BOLT—Crankshaft front counterweight stop.....	2	2	2	2	2	2	2	2	2	2	2	2	2
29, 30	3280	2101D5	NUT—Crankshaft front counterweight stop bolt.....	2	2	2	2	2	2	2	2	2	2	2	2	2
		58D3	COTTER PIN—Crankshaft front counterweight stop bolt nut	2	2	2	2	2	2	2	2	2	2	2	2	2
		82D15	BOLT—Crankshaft rear counterweight stop (.126 in. cotter hole).....	2	2	2	–	–	2	–	2	–	–	–	–	–
29, 30	3282	82D30	BOLT—Crankshaft rear counterweight stop (.096 in. cotter hole).....	2	–	–	2	2	–	2	–	2	2	2	2	2
		1D7	NUT—Crankshaft rear counterweight stop bolt (.156 in. slot).....	2	2	2	–	–	2	–	2	–	–	–	–	–
29, 30	3284	2101D5	NUT—Crankshaft rear counterweight stop bolt (.125 in. slot).....	2	–	–	2	2	–	2	–	2	2	2	2	2
		59D9	COTTER PIN—Crankshaft rear counterweight stop bolt nut (.116 in. diameter).....	2	2	2	–	–	2	–	2	–	–	–	–	–
		58D3	COTTER PIN—Crankshaft rear counterweight stop bolt nut (.086 in. diameter).....	2	–	–	2	2	–	2	–	2	2	2	2	2
29, 30	3286	65468	SCREW—Crankcheek.....	1	1	1	1	1	1	1	1	1	1	1	1	1
29, 30	3288	34D39	WASHER—Crankcheek screw, standard size.....	1	1	1	1	1	1	1	1	1	1	1	1	1
		34A39	WASHER—Same as 34D39 except .003 in. OS thickness..	AR	AR	AR	AR	AR	AR	AR	AR	AR	AR	AR	AR	AR
		34H39	WASHER—Same as 34D39 except .006 in. OS thickness..	AR	AR	AR	AR	AR	AR	AR	AR	AR	AR	AR	AR	AR
		34J39	WASHER—Same as 34D39 except .009 in. OS thickness..	AR	AR	AR	AR	AR	AR	AR	AR	AR	AR	AR	AR	AR
		* 113505	TUBE—Crankshaft oil.....	1 or 2	1	1	2	2	1	2	1	2	–	–	–	–
		* 126738	TUBE—Crankshaft oil.....	3	–	–	–	–	–	–	–	–	3	3	3	3
29	3290	68531	PLUG—Crankshaft breather substituting.....	1	1	1	1	1	–	–	–	–	1	–	1	–
29	3292	2075D15	BOLT—Crankshaft breather substituting plug retaining....	1	1	1	1	1	–	–	–	–	1	–	1	–
29	3294	2067D9	LOCKWASHER — Crankshaft breather substituting plug retaining screw.....	1	1	1	1	1	–	–	–	–	1	–	1	–
		@ 66109	SUPPORT—Crankshaft breather tube rear (early type)..... *Superseded by 66109N2.*	1	–	–	–	–	1	1	1	1	–	1	–	1
30	3296	66109N2	SUPPORT—Crankshaft breather tube rear (late type).....	1	–	–	–	–	–	–	–	1	–	–	–	1
30	3298	2075D14	BOLT—Crankshaft breather tube rear support to crankshaft.	1	–	–	–	–	1	1	1	1	–	1	–	1

AVIATIONS
WWW.AVIATIONS.COM

Fig. No.	Index Number	Part Number	Nomenclature 1 2 3 4 5 6 7	Per Engine	414008	415868	415866	418603	414233	416110	416116	418607	421393	421403	421899	421901
					Quantity Used Per Assembly											
30	3300	2067D8	LOCK—Crankshaft breather tube rear support to crankshaft bolt	1	–	–	–	–	1	1	1	1	–	1	–	1
29, 30	3302	20D9	PIN—Reduction driving gear or propeller shaft coupling aligning	1	1	1	1	1	1	1	1	1	1	1	1	1
29, 30	3304	2084D8	PLUG—Crankpin oil retaining	1	1	1	1	1	1	1	1	1	1	1	1	1
		59D3	COTTER PIN—Crankcheek screw	1												
30	3306	410596	TUBE ASSEMBLY — Crankshaft breather *Used with crankshaft assemblies 414233, 416110, 416116, 418607, 421403 and 421901.*	1												
		* 67073	TUBE—Crankshaft breather	1												
		* 67030	SUPPORT—Crankshaft breather tube front	1												
		* 66301	FERRULE—Crankshaft breather tube front	1												
30	3308	28843	GASKET—Crankshaft breather tube. *Used with tube assembly 410596.*	1												
29, 30	3310	155D49	BEARING—Crankshaft main front *Factory installed on all -40, -40B, -54, -60, -87 and -95 engines and on the following engines:* *-65* (29898 to 29997, 30018 to 30045, 41102 to 41122 and 41124 to 41133) *-71* (41296 to 41298, 41418, 41442, 41443, 41469 to 41486, 41510 to 41514, 44231 to 44241, 44296 to 44307, 45545 to 45549, 45560, 152629 to 152667, 152772 to 152787, 152802 to 152805, 152810 to 152817, 152824 to 152839, 152842 to 152853 and 152944 to 153085) *Superseded by 155D59 for -65 engines.*	1												
		155D59	BEARING—Crankshaft main front *Factory installed on all -73 and -97 engines and on the following engines:* *-65* (29347, 30046 to 30050, 41136 to 41267, 44242 to 44295, 44311 to 45387, 45394 to 45399, 45401 to 45474 and 45939 to 47456) *-71* (41487 to 41506)	1												
29, 30	3312	155D50	BEARING—Crankshaft main rear *Factory installed on all -40, -40B, -60, -87 and -95 engines and on the following engines:* *-65* (29898 to 29997, 30018 to 30045, 41102 to 41122 and 41124 to 41133) *-71* (41296 to 41298, 41418, 41442, 41443, 41469 to 41486, 41510 to 41514, 44231 to 44241, 44296 to 44307, 45545 to 45549, 45560, 152629 to 152667, 152772 to 152787, 152802 to 152805, 152810 to 152817, 152824 to 152839, 152842 to 152853 and 152944 to 153085) *Superseded by 155D58 for -65 engines.*	1												

Fig. No.	Index Number	Part Number	Nomenclature 1 2 3 4 5 6 7	Per Engine	Quantity Used Per Assembly 414008	415868	415866	418603	414233	416110	416116	418607	421393	421403	421899	421901
		155D58	BEARING—Crankshaft main rear... *Factory installed on all -54, -73 and -97 engines and on the following engines:* *-65* (29347, 30046 to 30050, 41136 to 41267, 44242 to 44295, 44311 to 45387, 45394 to 45399, 45401 to 45474 and 45939 to 47456) *-71* (41487 to 41506)	1												
3	3314	68409	RING—Crankshaft main front bearing retaining..................	1												
		@ 67366	NUT—Crankshaft main rear bearing (early type).................. *Superseded by 115171.*	1												
29, 30	3316	115171	NUT—Crankshaft main rear bearing (late type)....................	1												
29, 30	3318	2075D16	SCREW—Crankshaft main rear bearing nut lock.................	1												
29, 30	3320	2067D12	LOCKWASHER—Crankshaft main rear bearing nut lock screw.....	1												

Numbers shown are index numbers and are numerically arranged in the Group Assembly Parts List

Figure 31—Propeller Shaft (3:2 Ratio) (With Constant Speed Propeller)

AVIALOGS
WWW.AVIALOGS.COM

Fig. No.	Index Number	Part Number	Nomenclature 1 2 3 4 5 6 7	Units Per Assy—Model R1820 -40	-40B	-54	-60	-65	-71	-73	-87	-95	-97
			PROPELLER SHAFT (3:2 RATIO)										
			Except where otherwise noted all of the parts listed in this group were factory installed on all -40, -40B, -60, -71, -73, -87 and -95 engines.										
		(a) 413209	SHAFT AND BUSHING MACHINING ASSEMBLY—Propeller..... *Factory installed on the following engines:* *-40* (31651 to 31674 and 31676 to 31715) *413209 includes a propeller hub locating pin.* *Superseded by 415248.*	1	–	–	–	–	–	–	–	–	–
		(a) 414391	SHAFT AND BUSHING MACHINING ASSEMBLY—Propeller..... *Factory installed on the following engines:* *-95* (31732, 31733, 31741 to 31748 and 31750 to 31752) *414391 does not include a propeller hub locating pin.* *Superseded by 415249.*	–	–	–	–	–	–	–	–	1	–
		415248	SHAFT AND BUSHING MACHINING ASSEMBLY—Propeller..... *Factory installed on all -60 and -73 engines and on the following engines:* *-40* (31716 to 31722, 45777 to 45876, 45879 to 45928, 45932 to 45934, 94528 to 94567, 152790 to 152799, 152818 to 152820 and 152854 to 152943) *415248 includes a propeller hub locating pin.*	1	–	–	1	–	–	1	–	–	–
31, 32	3350	415249	SHAFT AND BUSHING MACHINING ASSEMBLY—Propeller..... *Factory installed on all -40B, -71 and -87 engines and on the following engines:* *-95* (31805, 31812, 31814, 31818, 31823 and 80373 to 80376) *415249 does not include a propeller hub locating pin.*	–	1	–	–	–	1	–	1	1	–
		* 110264	SHAFT—Propeller..... *Part of assembly 413209.*	1	–	–	–	–	–	–	–	–	–
		* 111904	SHAFT—Propeller..... *Part of assembly 414391.*	–	–	–	–	–	–	–	–	1	–

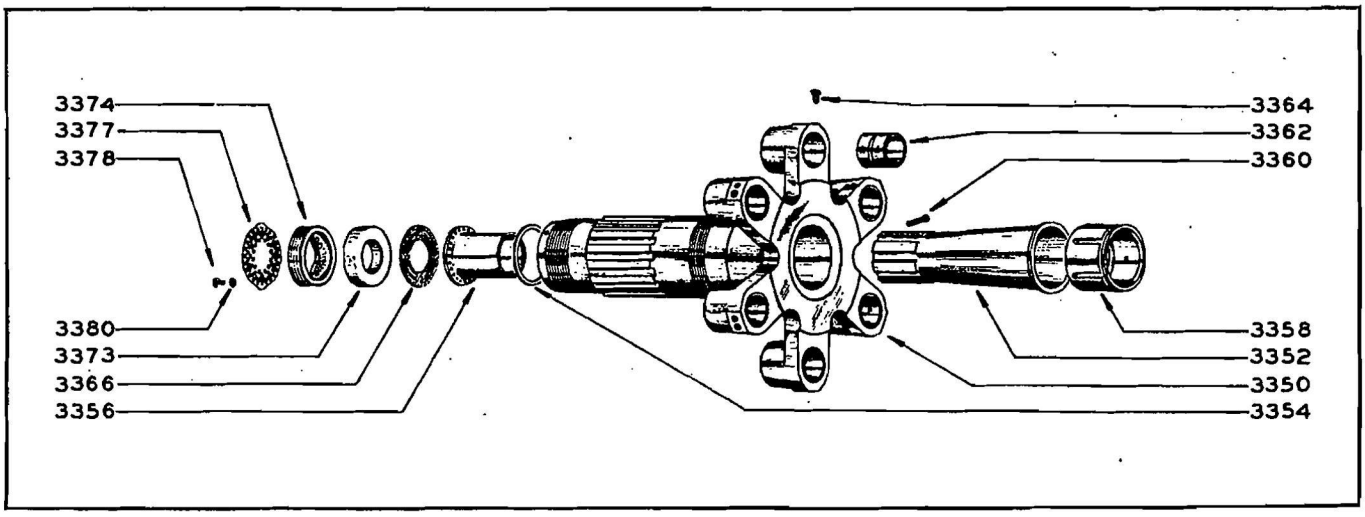

Numbers shown are index numbers and are numerically arranged in the Group Assembly Parts List

Figure 32—Propeller Shaft (3:2 Ratio) (With Hydromatic Propeller)

Fig. No.	Index Number	Part Number	Nomenclature 1 2 3 4 5 6 7	Units Per Assy—Model R1820 -40	-40B	-54	-60	-65	-71	-73	-87	-95	-97
		* 112887	SHAFT—Propeller..... *Part of assembly 415248.*	1	–	–	1	–	–	1	–	–	–
		* 112886	SHAFT—Propeller..... *Part of assembly 415249.*	–	1	–	–	–	1	–	1	1	–
		69030	SLEEVE—Propeller shaft..... *Part of assemblies 413209 and 414391.* *69030 is 2.379 in. on the OD at the spline end.*	1	–	–	–	–	–	–	–	1	–
31, 32	3352	69076	SLEEVE—Propeller shaft..... *Part of assemblies 415248 and 415249.* *69076 is 2.441 in. on the OD at the spline end.*	1	1	–	1	–	1	1	1	1	–
31, 32	3354	27D156	WASHER—Propeller shaft front bushing....	1	1	–	1	–	1	1	1	1	–
31, 32	3356	66112	BUSHING—Propeller shaft, front.....	1	1	–	1	–	1	1	1	1	–
		(a) 66113	BUSHING—Propeller shaft, rear (early type) *Part of assemblies 413209 and 414391.* *Superseded by 111708.*	1	–	–	–	–	–	–	–	1	–
31, 32	3358	111708	BUSHING—Propeller shaft, rear (late type). *Part of assemblies 415248 and 415249.*	1	1	–	1	–	1	1	1	1	–
31, 32	3360	2077D20	PIN—Propeller shaft rear bushing retaining..	1	1	–	1	–	1	1	1	1	–
31, 32	3362	110298	BUSHING—Reduction driving gear pinion..	6	6	–	6	–	6	6	6	6	–
31, 32	3364	2077D9	PIN—Reduction driving gear pinion bushing retaining.....	6	6	–	6	–	6	6	6	6	–
		26085	PIN—Propeller hub locating..... *Part of assemblies 413209 and 415248.*	1	–	–	1	–	–	1	–	–	–
		67882	NUT—Propeller shaft thread protector cap.. *67882 is shipped with the engine and is used to protect the threads on the propeller shaft.*	1	1	–	1	–	1	1	1	1	–
31, 32	3366	67029	GASKET—Propeller shaft hydro-oil connection or substituting ring..... *Used on engines having crankshaft breathing.*	1	1	–	1	–	–	–	1	1	–
31	3368	68135	CONNECTION—Propeller shaft hydro-oil..... *Used on engines having crankshaft breathing when a constant speed propeller is used.*	1	1	–	1	–	–	–	1	1	–
31	3370	2126D1	PLUG—Propeller shaft hydro-oil connection..... *Used with connection 68135.*	1	1	–	1	–	–	–	1	1	–
31	3372	AN900-10	GASKET—Propeller shaft hydro-oil connection plug (Wright Part No. 23D16)..... *Used with connection 68135.*	1	1	–	1	–	–	–	1	1	–
32	3373	120746	RING—Propeller shaft hydro-oil connection substituting..... *Used on engines having crankshaft breathing when a hydromatic propeller is used.*	1	1	–	1	–	–	–	1	1	–
31, 32	3374	28842	NUT—Propeller shaft hydro-oil connection or substituting ring.....	1	1	–	1	–	–	–	1	1	–
31	3376	67311	SCREEN—Crankshaft breather..... *Used on engines having crankshaft breathing when a constant speed propeller is used.*	1	1	–	1	–	–	–	1	1	–
32	3377	120747	SCREEN—Crankshaft breather..... *Used on engines having crankshaft breathing when a hydromatic propeller is used.*	1	1	–	1	–	–	–	1	1	
31, 32	3378	86D11	SCREW—Crankshaft breather screen to propeller shaft hydro-oil connection nut.....	3	3	–	3	–	–	–	3	3	–
31, 32	3380	27D30	WASHER—Crankshaft breather screen to propeller shaft hydro-oil connection nut.....	3	3	–	3	–	–	–	3	3	–
		68529	ADAPTER—Propeller shaft hydro-oil connection. *Used on engines without crankshaft breathing.*	–	–	–	–	–	1	1	–	–	–
		28843	GASKET—Propeller shaft hydro-oil connection adapter..... *Used with adapter 68529.*	–	–	–	–	–	1	1	–	–	–
		68530	COVER—Propeller shaft hydro-oil connection substituting..... *Used with adapter 68529.*	–	–	–	–	–	1	1	–	–	–
		66251	GASKET—Propeller shaft hydro-oil connection substituting cover..... *Used with cover 68530.*	–	–	–	–	–	1	1	–	–	–

AVIATION MANUALS
WWW.AVIATIONMANUALS.COM

Fig. No.	Index Number	Part Number	Nomenclature 1 2 3 4 5 6 7	Units Per Assy—Model R1820 -40	-40B	-54	-60	-65	-71	-73	-87	-95	-97
		28842	NUT—Propeller shaft hydro-oil connection substituting cover..... *Used with cover 68530.*	-	-	-	-	-	1	1	-	-	-
		68533	LOCK—Propeller shaft hydro-oil connection substituting cover nut..... *Used with cover 68530.*	-	-	-	-	-	1	1	-	-	-
		86D11	SCREW—Propeller shaft hydro-oil connection substituting cover lock to nut..... *Used with cover 68530.*	-	-	-	-	-	3	3	-	-	-
		27D30	WASHER—Propeller shaft hydro-oil connection substituting cover lock to nut..... *Used with cover 68530.*	-	-	-	-	-	3	3	-	-	-
			PROPELLER SHAFT (16:9 RATIO)										
			Except where otherwise noted all of the parts listed in this group were factory installed on all -65 and -97 engines.										
		@ 412248	SHAFT AND BUSHING MACHINING ASSEMBLY—Propeller..... *Factory installed on the following engines:* *-65* (29898 to 29997, 30018 to 30050, 41102 to 41122, 41124 to 41133 and 41136 to 41209) *Superseded by 412315.*	-	-	-	-	1	-	-	-	-	-
33	3400	412315	SHAFT AND BUSHING MACHINING ASSEMBLY—Propeller..... *Factory installed on all -97 engines and on the following engines:* *-65* (29347, 41210 to 41267, 44242 to 44295, 44311 to 45387, 45394 to 45399, 45401 to 45474 and 45939 to 47456)	-	-	-	-	1	-	-	-	-	1
		* 69025	SHAFT—Propeller..... *Part of assembly 412248.*	-	-	-	-	1	-	-	-	-	-
		* 69075	SHAFT—Propeller..... *Part of assembly 412315.*	-	-	-	-	1	-	-	-	-	1
		69030	SLEEVE—Propeller shaft..... *Part of assembly 412248.* *69030 is 2.379 in. on the OD at the spline end.*	-	-	-	-	1	-	-	-	-	-
33	3402	69076	SLEEVE—Propeller shaft..... *Part of assembly 412315.* *69076 is 2.441 in. on the OD at the spline end.*	-	-	-	-	1	-	-	-	-	1

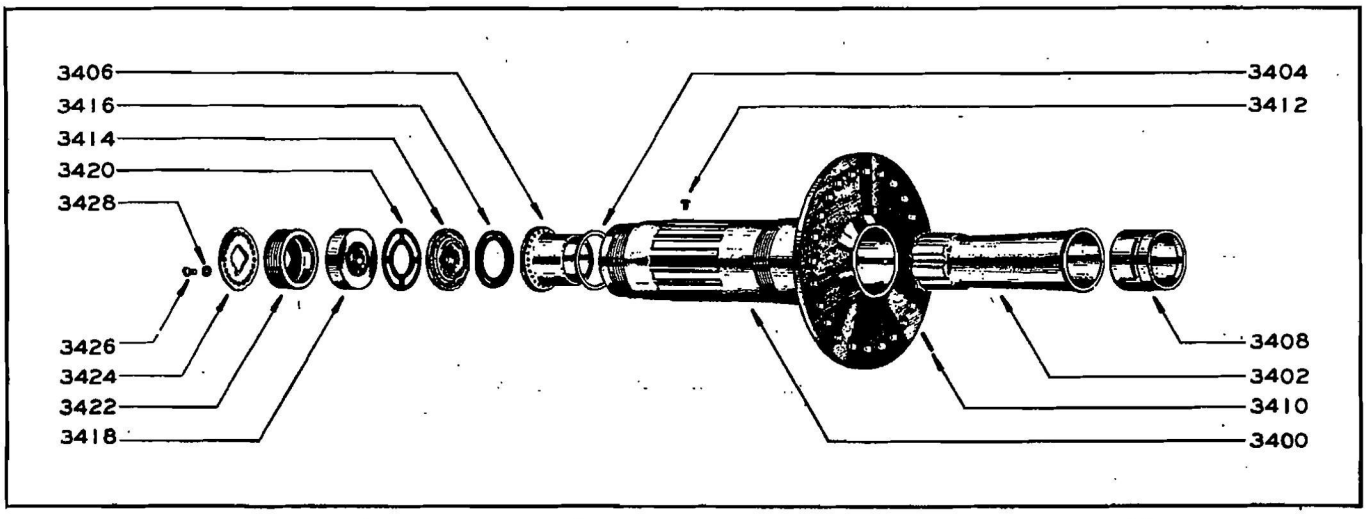

Numbers shown are index numbers and are numerically arranged in the Group Assembly Parts List

Figure 33—Propeller Shaft (16:9 Ratio)

Fig. No.	Index Number	Part Number	Nomenclature 1 2 3 4 5 6 7	Units Per Assy—Model R1820 -40	-40B	-54	-60	-65	-71	-73	-87	-95	-97
33	3404	27D156	WASHER—Propeller shaft front bushing...	–	–	–	–	1	–	–	–	–	1
33	3406	66112	BUSHING—Propeller shaft, front.....	–	–	–	–	1	–	–	–	–	1
		66756	BUSHING—Propeller shaft, rear..... *Part of assembly 412248.*	–	–	–	–	1	–	–	–	–	–
33	3408	110276	BUSHING—Propeller shaft, rear..... *Part of assembly 412315.*	–	–	–	–	1	–	–	–	–	1
33	3410	20D12	PIN—Propeller shaft rear bushing retaining..	–	–	–	–	1	–	–	–	–	1
		20H12	PIN—Same as 20D12 except .002 in. OS OD.	–	–	–	–	AR	–	–	–	–	AR
		20S12	PIN—Same as 20D12 except .010 in. OS OD.	–	–	–	–	AR	–	–	–	–	AR
		20J12	PIN—Same as 20D12 except .015 in. OS OD.	–	–	–	–	AR	–	–	–	–	AR
33	3412	26085	PIN—Propeller hub locating.....	–	–	–	–	1	–	–	–	–	1
		67882	NUT—Propeller shaft thread protector cap.. *67882 is shipped with the engine and is used to protect the threads on the propeller shaft.*	–	–	–	–	1	–	–	–	–	1
33	3414	68529	ADAPTER—Propeller shaft hydro-oil connection	–	–	–	–	1	–	–	–	–	1
33	3416	28843	GASKET—Propeller shaft hydro-oil connection adapter.....	–	–	–	–	1	–	–	–	–	1
33	3418	68530	COVER—Propeller shaft hydro-oil connection substituting.....	–	–	–	–	1	–	–	–	–	1
33	3420	66251	GASKET—Propeller shaft hydro-oil connection substituting cover.....	–	–	–	–	1	–	–	–	–	1
33	3422	28842	NUT—Propeller shaft hydro-oil connection substituting cover.....	–	–	–	–	1	–	–	–	–	1
33	3424	68533	LOCK—Propeller shaft hydro-oil connection substituting cover nut.....	–	–	–	–	1	–	–	–	–	1
33	3426	86D11	SCREW—Propeller shaft hydro-oil connection substituting cover lock to nut.....	–	–	–	–	3	–	–	–	–	3
33	3428	27D30	WASHER—Propeller shaft hydro-oil connection substituting cover lock to nut.....	–	–	–	–	3	–	–	–	–	3

PROPELLER SHAFT AND SUPPORT (DIRECT DRIVE)

Except where otherwise noted all of the parts listed in this group were factory installed on all -54 engines.

		421661	SHAFT AND BUSHING MACHINING ASSEMBLY—Propeller (early type)..... *Factory installed on the following engines: -54* (86752 to 86756 and 86758 to 86793)	–	–	1	–	–	–	–	–	–	–
34	3475	420780	SHAFT AND BUSHING MACHINING ASSEMBLY—Propeller (late type)..... *Factory installed on the following engines: -54* (86727 to 86751, 86757, 86794 to 86866, 429167 to 429376 and 452267 to 452416)	–	–	1	–	–	–	–	–	–	–
		* 120337	SHAFT—Propeller..... *Part of assembly 421661.*	–	–	1	–	–	–	–	–	–	–
		* 127358	SHAFT—Propeller..... *Part of assembly 420780.*	–	–	1	–	–	–	–	–	–	–
34	3477	69076	SLEEVE—Propeller shaft.....	–	–	1	–	–	–	–	–	–	–
34	3479	27D156	WASHER—Propeller shaft front bushing....	–	–	1	–	–	–	–	–	–	–
34	3481	66112	BUSHING—Propeller shaft front.....	–	–	1	–	–	–	–	–	–	–
34	3483	120280	BUSHING—Propeller shaft rear.....	–	–	1	–	–	–	–	–	–	–
34	3485	20D12	PIN—Propeller shaft rear bushing retaining..	–	–	1	–	–	–	–	–	–	–
		20H12	PIN—Same as 20D12 except .002 in. OS OD.	–	–	AR	–	–	–	–	–	–	–
		20S12	PIN—Same as 20D12 except .010 in. OS OD.	–	–	AR	–	–	–	–	–	–	–
		20J12	PIN—Same as 20D12 except .015 in. OS OD.	–	–	AR	–	–	–	–	–	–	–
34	3487	26085	PIN—Propeller hub locating.....	–	–	1	–	–	–	–	–	–	–
34	3489	20D9	PIN—Propeller shaft coupling locating.....	–	–	1	–	–	–	–	–	–	–
		67882	NUT—Propeller shaft thread protector cap.. *67882 is shipped with the engine and is used to protect the threads on the propeller shaft.*	–	–	1	–	–	–	–	–	–	–
34	3491	68529	ADAPTER—Propeller shaft hydro-oil connection	–	–	1	–	–	–	–	–	–	–

AVIALOGS
WWW.AVIALOGS.COM

Fig. No.	Index Number	Part Number	Nomenclature 1 2 3 4 5 6 7	Units Per Assy—Model R1820 -40 -40B -54 -60 -65 -71 -73 -87 -95 -97

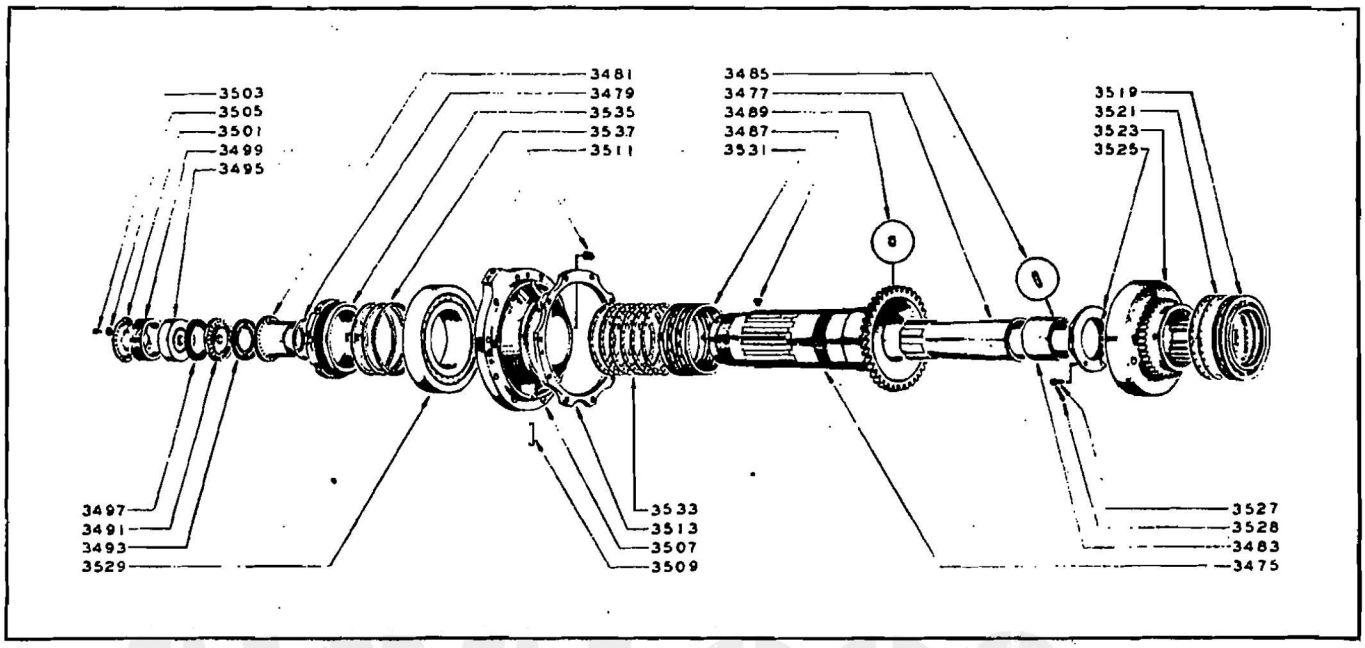

Numbers shown are index numbers and are numerically arranged in the Group Assembly Parts List

Figure 34—Propeller Shaft and Support (Direct Drive)

34	3493	28843	GASKET—Propeller shaft hydro-oil connection adapter	–	–	1	–	–	–	–	–	–
34	3495	68530	COVER—Propeller shaft hydro-oil connection substituting	–	–	1	–	–	–	–	–	–
34	3497	66251	GASKET—Propeller shaft hydro-oil connection substituting cover	–	–	1	–	–	–	–	–	–
34	3499	28842	NUT—Propeller shaft hydro-oil connection substituting cover	–	–	1	–	–	–	–	–	–
34	3501	68533	LOCK—Propeller shaft hydro-oil connection substituting cover nut	–	–	1	–	–	–	–	–	–
34	3503	86D11	SCREW—Propeller shaft hydro-oil connection substituting cover lock to nut	–	–	3	–	–	–	–	–	–
34	3505	27D30	WASHER—Propeller shaft hydro-oil connection substituting cover lock to nut	–	–	3	–	–	–	–	–	–
		@ 412664	SUPPORT AND SLEEVE ASSEMBLY—Propeller shaft	–	–	1	–	–	–	–	–	–
			Factory installed on -54 engines 86727 to 86793									
			For replacement, make the following substitutions:									
			Use: *421152* Description: *Support and Sleeve Assembly — Stationary reduction gear* Remove: *412664* Quant.: *1*									
			Use: *45D3* Description: *Bolt—Stationary reduction gear support to crankcase front section* Remove: *45D21* Quant.: *2*									
34	3507	421152	SUPPORT AND SLEEVE ASSEMBLY—Propeller shaft	–	–	1	–	–	–	–	–	–
			Factory installed on the following engines:									
			-54 (86794 to 86866, 429167 to 429376 and 452267 to 452416)									
		* 69537	SUPPORT—Propeller shaft	–	–	1	–	–	–	–	–	–
			Part of assembly 412664.									

Fig. No.	Index Number	Part Number	Nomenclature 1 2 3 4 5 6 7	Units Per Assy—Model R1820 -40	-40B	-54	-60	-65	-71	-73	-87	-95	-97
		* 120709	SUPPORT—Propeller shaft..... *Part of assembly 421152.*	–	–	1	–	–		–	–	–	–
		* 110265	SLEEVE—Propeller shaft support..... *Part of assembly 412664.*	–	–	1	–	–	–	–	–	–	–
		* 120708	SLEEVE—Propeller shaft support..... *Part of assembly 421152.*	–	–	1	–	–	–	–	–	–	–
34	3509	2077D24	PIN—Propeller shaft support sleeve dowel...	–	–	1	–	–	–	–	–	–	–
		* 102D13	PLUG—Propeller shaft support oil hole (.375 in.-24).....	–	–	1	–	–	–	–	–	–	–
		* 102D12	PLUG—Propeller shaft support oil hole (.313 in.-24).....	–	–	1	–	–	–	–	–	–	–
34	3511	* 4015D3	BUSHING—Propeller shaft support to crankcase front section bolt, screw..... *Part of assembly 421152.*	–	–	2	–	–	–	–	–	–	–
		4015H3	BUSHING—Same as 4015D3 except .003 in. OS OD.....	–	–	AR	–	–	–	–	–	–	–
		4015S3	BUSHING—Same as 4015D3 except .007 in. OS OD.....	–	–	AR	–	–	–	–	–	–	–
		4015J3	BUSHING—Same as 4015D3 except .012 in. OS OD.....	–	–	AR	–	–	–	–	–	–	–
34	3513	120335	RETAINER—Propeller shaft support.....	–	–	1	–	–	–	–	–	–	–
		45D21	BOLT—Propeller shaft support retainer to crankcase front section (2.563 in. long)..... *Used with support 412664.*	–	–	2	–	–	–	–	–	–	–
1	3515	45D3	BOLT—Propeller shaft support to crankcase front section (1.718 in. long)..... *Used with support 421152.*	–	–	2	–	–	–	–	–	–	–
1	3517	34D33	WASHER—Propeller shaft support or retainer to crankcase front section.....	–	–	2	–	–	–	–	–	–	–
34	3519	68414	SPACER—Propeller shaft coupling.....	–	–	1	–	–	–	–	–	–	–
34	3521	113255	RING—Propeller shaft coupling spacer oil seal...	–	–	2	–	–	–	–	–	–	–
		113255Y1	RING—Same as 113255 except .005 in. OS OD..	–	–	AR	–	–	–	–	–	–	–
		113255Y2	RING—Same as 113255 except .010 in. OS OD...	–	–	AR	–	–	–	–	–	–	–
34	3523	120315	COUPLING—Propeller shaft.....	–	–	1	–	–	–	–	–	–	–
34	3525	28778	NUT—Propeller shaft coupling.....	–	–	1	–	–	–	–	–	–	–
34	3527	2075D7	SCREW—Propeller shaft coupling nut locking...	–	–	1	–	–	–	–	–	–	–
34	3528	57D1	COTTER PIN—Propeller shaft coupling nut locking screw.....	–	–	1	–	–	–	–	–	–	–
34	3529	21D92	BEARING—Propeller shaft thrust.....	–	–	1	–	–	–	–	–	–	–
34	3531	69560	SPACER—Propeller shaft thrust bearing.....	–	–	1	–	–	–	–	–	–	–
		69560Y1	SPACER—Same as 69560 except .003 in. US ID..	–	–	AR	–	–	–	–	–	–	–
34	3533	5015D3	RING—Propeller shaft thrust bearing spacer oil seal.....	–	–	6	–	–	–	–	–	–	–
		5015H3	RING—Same as 5015D3 except .005 in. OS OD..	–	–	AR	–	–	–	–	–	–	–
		5015S3	RING—Same as 5015D3 except .010 in. OS OD..	–	–	AR	–	–	–	–	–	–	–
34	3535	67497	NUT—Propeller shaft thrust bearing.....	–	–	1	–	–	–	–	–	–	–
34	3537	63630	RING—Propeller shaft thrust bearing nut oil seal	–	–	3	–	–	–	–	–	–	–
		63630Y1	RING—Same as 63630 except .002 in. US width, standard OD.....	–	–	AR	–	–	–	–	–	–	–
		63630Y10	RING—Same as 63630 except standard width, .005 in. OS OD.....	–	–	AR	–	–	–	–	–	–	–
		63630Y20	RING—Same as 63630 except standard width, .010 in. OS OD.....	–	–	AR	–	–	–	–	–	–	–
		63630Y30	RING—Same as 63630 except standard width, .015 in. OS OD	–	–	AR	–	–	–	–	–	–	–
		63630Y40	RING—Same as 63630 except standard width, .020 in. OS OD.....	–	–	AR	–	–	–	–	–	–	–

AVIATORS
WWW.AVIATORS.COM

Fig. No.	Index Number	Part Number	Nomenclature 1 2 3 4 5 6 7	Units Per Assy—Model R1820 -40	-40B	-54	-60	-65	-71	-73	-87	-95	-97
			PROPELLER SHAFT REDUCTION GEAR (3:2 RATIO)										
35	3550	68414	SPACER—Reduction driving gear	1	1	-	1	-	1	1	1	1	-
35	3552	113255	RING—Reduction driving gear spacer oil seal	2	2	-	2	-	2	2	2	2	-
		113255Y1	RING—Same as 113255 except .005 in. OS OD	AR	AR	-	AR	-	AR	AR	AR	AR	
		113255Y2	RING—Same as 113255 except .010 in. OS OD	AR	AR	-	AR	-	AR	AR	AR	AR	-
35	3554	68375	GEAR—Reduction driving	1	1	-	1	-	1	1	1	1	-
35	3556	28778	NUT—Reduction driving gear	1	1	-	1	-	1	1	1	1	-
35	3558	2075D7	SCREW—Reduction driving gear nut locking	1	1	-	1	-	1	1	1	1	-
35	3559	57D1	COTTER PIN—Reduction driving gear nut locking screw	1	1	-	1	-	1	1	1	1	-
35	3560	65290	PINION—Reduction driving gear	6	6	-	6	-	6	6	6	6	-
35	3562	69363	NUT—Reduction driving gear pinion lock	6	6	-	6	-	6	6	6	6	-
35	3563	59D5	COTTER PIN—Reduction driving gear pinion lock nut	6	6	-	6	-	6	6	6	6	-
35	3564	411549	GEAR ASSEMBLY—Stationary reduction	1	1	-	1	-	1	1	1	1	-
		* 68048	GEAR—Stationary reduction	1	1	-	1	-	1	1	1	1	-
		102D12	PLUG—Stationary reduction gear oil retaining	2	2	-	2	-	2	2	2	2	-
35	3566	64621	RING—Reduction driving gear pinion guard	1	1	-	1	-	1	1	1	1	-
35	3568	124D75	NUT—Stationary reduction gear to crankcase front section	2	2	-	2	-	2	2	2	2	-
35	3570	64075	BOLT—Stationary reduction gear to crankcase front section	8	8	-	8	-	8	8	8	8	-

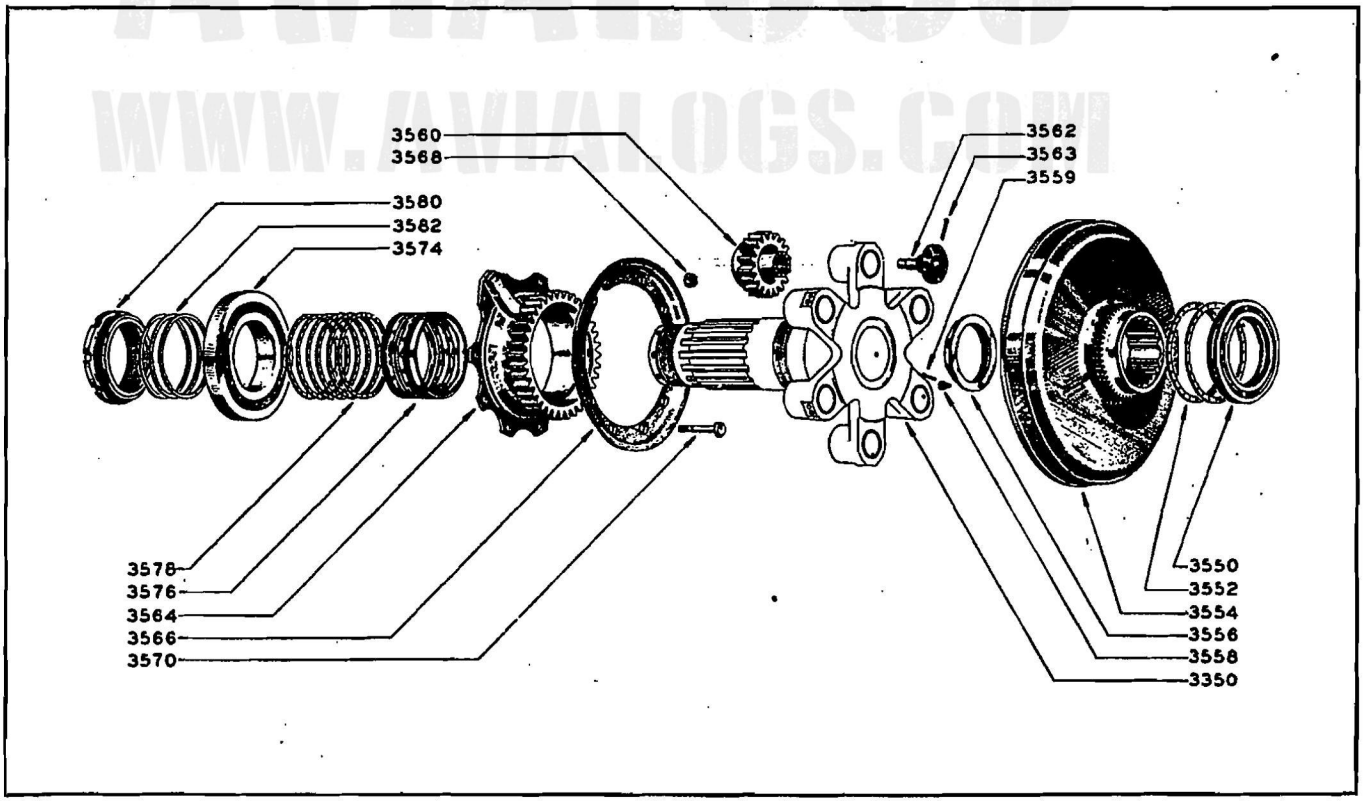

Numbers shown are index numbers and are numerically arranged in the Group Assembly Parts List

Figure 35—Propeller Shaft Reduction Gear (3:2 Ratio)

Fig. No.	Index Number	Part Number	Nomenclature 1 2 3 4 5 6 7	Units Per Assy—Model R1820 -40	-40B	-54	-60	-65	-71	-73	-87	-95	-97
2	3572	29730	CIRCLET—Stationary reduction gear to crankcase front section bolt	8	8	-	8	-	8	8	8	8	-
		@ 21D80	BEARING—Propeller shaft thrust. *Factory installed on the following engines: -40 (31651 to 31674, 31676 to 31722 and 45777 to 45836)* *Superseded by 21D92.*	1	-	-	-	-	-	-	-	-	
35	3574	21D92	BEARING—Propeller shaft thrust. *Factory installed on all engines except -40 engines 31651 to 31674, 31676 to 31722 and 45777 to 45836.*	1	1	-	1	-	1	1	1	1	-
35	3576	66116	SPACER—Propeller shaft thrust bearing	1	1	-	1	-	1	1	1	1	-
		66116Y1	SPACER—Same as 66116 except .003 in. US ID	AR	AR	-	AR	-	AR	AR	AR	AR	-
35	3578	5015D3	RING—Propeller shaft thrust bearing spacer oil seal	6	6	-	6	-	6	6	6	6	-
		5015H3	RING—Same as 5015D3 except .005 in. OS OD	AR	AR	-	AR	-	AR	AR	AR	AR	-
		5015S3	RING—Same as 5015D3 except .010 in. OS OD	AR	AR	-	AR	-	AR	AR	AR	AR	-
35	3580	67497	NUT—Propeller shaft thrust bearing	1	1	-	1	-	1	1	1	1	-
35	3582	63630	RING—Propeller shaft thrust bearing nut oil seal	3	3	-	3	-	3	3	3	3	-
		63630Y1	RING—Same as 63630 except .002 in. US width, standard OD	AR	AR	-	AR	-	AR	AR	AR	AR	-
		63630Y10	RING—Same as 63630 except standard width, .005 in. OS OD	AR	AR	-	AR	-	AR	AR	AR	AR	-
		63630Y20	RING—Same as 63630 except standard width, .010 in. OS OD	AR	AR	-	AR	-	AR	AR	AR	AR	-
		63630Y30	RING—Same as 63630 except standard width, .015 in. OS OD	AR	AR	-	AR	-	AR	AR	AR	AR	-
		63630Y40	RING—Same as 63630 except standard width, .020 in. OS OD	AR	AR	-	AR	-	AR	AR	AR	AR	-
			PROPELLER SHAFT REDUCTION GEAR (16:9 RATIO)										
		@ 412664	SUPPORT AND SLEEVE ASSEMBLY—Stationary reduction gear. *Factory installed on all engines.* *For replacement, make the following substitutions:*	-	-	-	-	1	-	-	-	-	1
			Use: *421152* Description: *Support and Sleeve Assembly — Stationary reduction gear* Remove: *412664* Quant.: *1*										
			Use: *45D3* Description: *Bolt—Stationary reduction gear support to crankcase front section* Remove: *45D21* Quant.: *2*										
			Use: *34D33* Description: *Washer — Stationary reduction gear support to crankcase front section* Remove: *27D76* Quant.: *2*										
36	3600	421152	SUPPORT AND SLEEVE ASSEMBLY—Stationary reduction gear. *Not factory installed on any engines.* *421152 supersedes and is supplied for replacement of 412664.*	-	-	-	-	1	-	-	-	-	1
		* 69537	SUPPORT—Stationary reduction gear. *Part of assembly 412664.*	-	-	-	-	1	-	-	-	-	1
		* 120709	SUPPORT—Stationary reduction gear. *Part of assembly 421152.*	-	-	-	-	1	-	-	-	-	1
		* 110265	SLEEVE—Stationary reduction gear support *Part of assembly 412664.*	-	-	-	-	1	-	-	-	-	1
		* 120708	SLEEVE—Stationary reduction gear support *Part of assembly 421152.*	-	-	-	-	1	-	-	-	-	1

AVIATIONEGS
WWW.AVIATIONEGS.COM

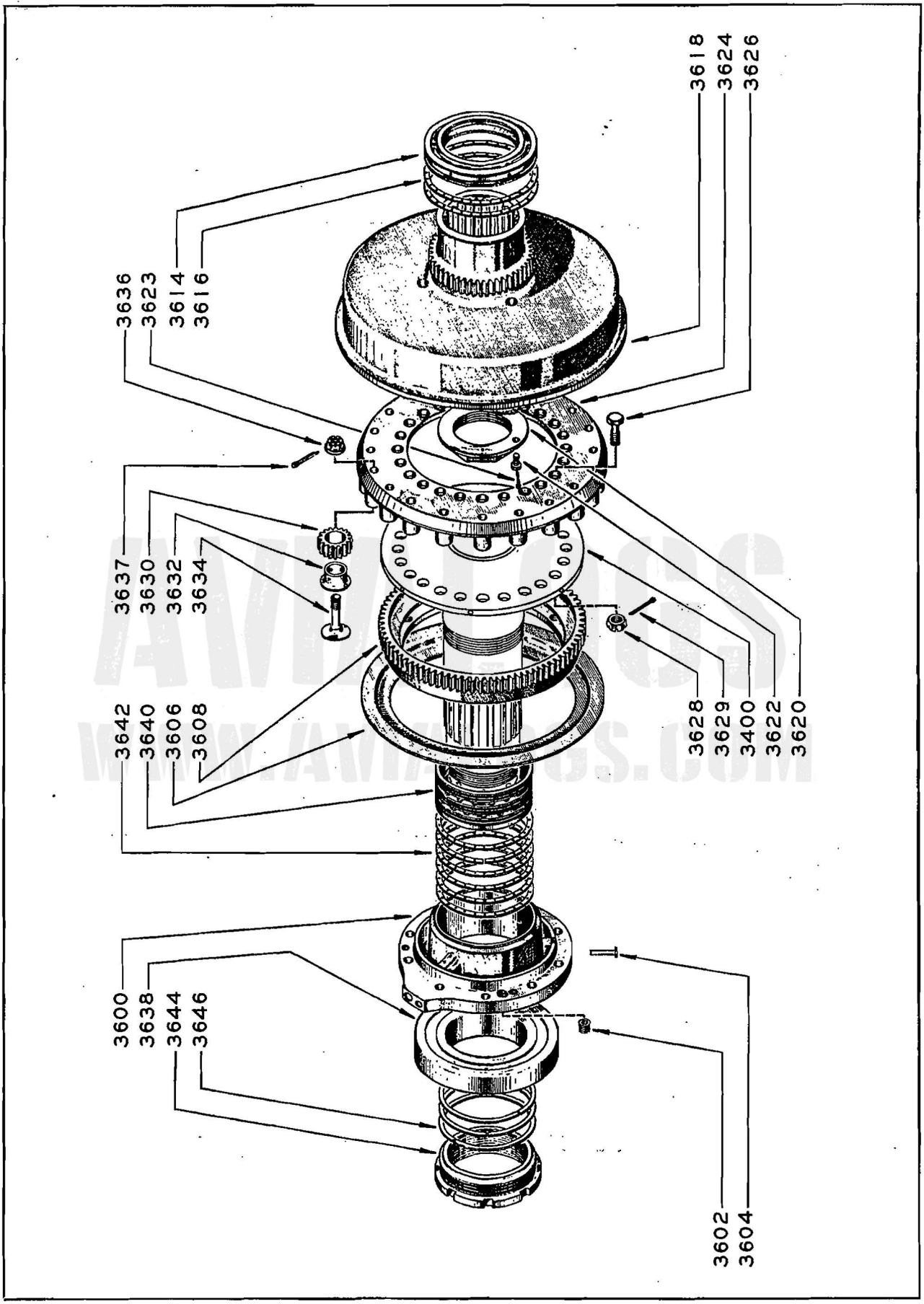

Numbers shown are index numbers and are numerically arranged in the Group Assembly Parts List

Figure 36—Propeller Shaft Reduction Gear (16:9 Ratio)

Fig. No.	Index Number	Part Number	Nomenclature 1 2 3 4 5 6 7	Units Per Assy—Model R1820 -40	-40B	-54	-60	-65	-71	-73	-87	-95	-97
36	3602	¢ 4015D3	BUSHING—Stationary reduction gear support to crankcase front section bolt, screw	–	–	–	–	2	–	–	–	–	2
			Part of assembly 421152.										
		4015H3	BUSHING—Same as 4015D3 except .003 in. OS OD	–	–	–	–	AR	–	–	–	–	AR
		4015S3	BUSHING—Same as 4015D3 except .007 in. OS OD	–	–	–	–	AR	–	–	–	–	AR
		4015J3	BUSHING—Same as 4015D3 except .012 in. OS OD	–	–	–	–	AR	–	–	–	–	AR
36	3604	2077D24	PIN—Stationary reduction gear support sleeve dowel	–	–	–	–	1	–	–	–	–	1
		* 102D13	PLUG—Stationary reduction gear oil retaining (.375 in.-24)	–	–	–	–	1	–	–	–	–	1
		* 102D12	PLUG—Stationary reduction gear oil retaining (.313 in.-24)	–	–	–	–	1	–	–	–	–	1
36	3606	66757	RING—Reduction driving gear pinion guard	–	–	–	–	1	–	–	–	–	1
36	3608	66636	GEAR—Stationary reduction	–	–	–	–	1	–	–	–	–	1
		45D21	BOLT—Stationary reduction gear to crankcase front section (2.563 in. long)	–	–	–	–	2	–	–	–	–	2
			Supersedes and supplied for replacement of 45D28.										
			Used with support 412664.										
		27D76	WASHER—Stationary reduction gear to crankcase front section (.328 in. x .625 in. x .031 in.)	–	–	–	–	2	–	–	–	–	2
			Used with bolt 45D21.										
1	3610	45D3	BOLT—Stationary reduction gear support to crankcase front section (1.718 in. long)	–	–	–	–	2	–	–	–	–	2
			Used with support 421152.										
1	3612	34D33	WASHER—Stationary reduction gear support to crankcase front section (.328 in. x .625 in. x .063 in.)	–	–	–	–	2	–	–	–	–	2
			Used with bolt 45D3.										
36	3614	68414	SPACER—Reduction driving gear	–	–	–	–	1	–	–	–	–	1
36	3616	113255	RING—Reduction driving gear spacer oil seal	–	–	–	–	2	–	–	–	–	2
	—	113255Y1	RING—Same as 113255 except .095 in. OS OD	–	–	–	–	AR	–	–	–	–	AR
		113255Y2	RING—Same as 113255 except .010 in. OS OD	–	–	–	–	AR	–	–	–	–	AR
36	3618	68508	GEAR—Reduction driving	–	–	–	–	1	–	–	–	–	1
36	3620	28778	NUT—Reduction driving gear	–	–	–	–	1	–	–	–	–	1
36	3622	2075D7	SCREW—Reduction driving gear nut locking	–	–	–	–	1	–	–	–	–	1
36	3623	57D1	COTTER PIN—Reduction driving gear nut locking screw	–	–	–	–	1	–	–	–	–	1
36	3624	69634	CARRIER—Reduction driving gear pinion	–	–	–	–	1	–	–	–	–	1
36	3626	2069D20	BOLT—Reduction driving gear pinion carrier to propeller shaft	–	–	–	–	24	–	–	–	–	24
36	3628	2101D7	NUT—Reduction driving gear pinion carrier to propeller shaft	–	–	–	–	24	–	–	–	–	24
36	3629	58D8	COTTER PIN—Reduction driving gear pinion carrier to propeller shaft	–	–	–	–	24	–	–	–	–	24
36	3630	69632	PINION—Reduction driving gear	–	–	–	–	20	–	–	–	–	20
36	3632	110117	BUSHING—Reduction driving gear pinion	–	–	–	–	20	–	–	–	–	20
		@ 66733	BOLT—Reduction driving gear pinion (RH thread)	–	–	–	–	20	–	–	–	–	20
			Factory installed on -65 engines 29898 to 29947.										
			For replacement, make the following substitutions: Use *112346* Description *Bolt — Reduction driving gear pinion* Remove Quant. *66733*										

Fig. No.	Index Number	Part Number	Nomenclature 1 2 3 4 5 6 7	Units Per Assy—Model R1820 -40	-40B	-54	-60	-65	-71	-73	-87	-95	-97
			124D130 Nut — Reduction driving gear pinion retaining 2101D4 1										
36	3634	112346	BOLT—Reduction driving gear pinion (LH thread)..... *Factory installed on all engines except -65 engines 29898 to 29947.*	–	–	–	–	20	–	–	–	–	20
		2101D4	NUT—Reduction driving gear pinion retaining (RH thread)..... *Used with bolt 66733.*	–	–	–	–	20	–	–	–	–	20
36	3636	124D130	NUT—Reduction driving gear pinion retaining (LH thread)..... *Used with bolt 112346.*	–	–	–	–	20	–	–	–	–	20
		57D1	COTTER PIN—Reduction driving gear pinion retaining nut (.063 in. x .500 in.)..... *Used with nut 2101D4.*	–	–	–	–	20	–	–	–	–	20
36	3637	58D2	COTTER PIN—Reduction driving gear pinion retaining nut (.094 in. x .500 in.)..... *Used with nut 124D130.*	–	–	–	–	20	–	–	–	–	20
		@ 21D80	BEARING—Propeller shaft thrust..... *Factory installed on the following engines: -65* (29898 to 29997, 30030 to 30045, 41102 to 41122 and 41124 to 41133) *Superseded by 21D93.*	–	–	–	–	1	–	–	–	–	–
36	3638	21D93	Bearing—Propeller shaft thrust..... *Factory installed on all -97 engines and on the following engines: -65* (29347, 30018 to 30029, 30046 to 30050, 41136 to 41267, 44242 to 44295, 44311 to 45387, 45394 to 45399, 45401 to 45474 and 45939 to 47456)	–	–	–	–	1	–	–	–	–	1
36	3640	69560	SPACER—Propeller shaft thrust bearing.....	–	–	–	–	1	–	–	–	–	1
		69560Y1	SPACER—Same as 69560 except .003 in. US ID..	–	–	–	–	AR	–	–	–	–	AR
36	3642	5015D3	RING—Propeller shaft thrust bearing spacer oil seal.....	–	–	–	–	6	–	–	–	–	6
		5015H3	RING—Same as 5015D3 except .005 in. OS OD..	–	–	–	–	AR	–	–	–	–	AR
		5015S3	RING—Same as 5015D3 except .010 in. OS OD..	–	–	–	–	AR	–	–	–	–	AR
36	3644	67497	NUT—Propeller shaft thrust bearing.....	–	–	–	–	1	–	–	–	–	1
36	3646	63630	RING—Propeller shaft thrust bearing nut oil seal	–	–	–	–	3	–	–	–	–	3
		63630Y1	RING—Same as 63630 except .002 in. US width, standard OD.....	–	–	–	–	AR	–	–	–	–	AR
		63630Y10	RING—Same as 63630 except standard width, .005 in. OS OD.....	–	–	–	–	AR	–	–	–	–	AR
		63630Y20	RING—Same as 63630 except standard width, .010 in. OS OD.....	–	–	–	–	AR	–	–	–	–	AR
		63630Y30	RING—Same as 63630 except standard width, .015 in. OS OD.....	–	–	–	–	AR	–	–	–	–	AR
		63630Y40	RING—Same as 63630 except standard width, .020 in. OS OD.....	–	–	–	–	AR	–	–	–	–	AR

CONNECTING RODS

Two types of master connecting rod bearings are supplied. These are referred to as a tight fit type and a loose prefit type.

The tight fit type has a copper lead inner surface which is not lead plated until after it is installed in the master rod bore. The outside diameter of the tight fit bearing originally was unplated but is now silver plated.

The loose prefit type bearing is silver plated on the

Fig. No.	Index Number	Part Number	Nomenclature 1 2 3 4 5 6 7	Units Per Assy—Model R1820 -40	-40B	-54	-60	-65	-71	-73	-87	-95	-97
			inner and outer diameter and is lead-indium plated on the inner diameter. Some early loose prefit type bearings were lead-indium plated on both the inner and outer diameters. The tight fit bearing can be distinguished from the loose prefit type in that the loose prefit type has the letter "s" electric etched ahead of the "w" at the x-ray serial number which is located at the splined end, either on the face of the spline or in the chamfer at the inner diameter of the splined end.										
		@ 411263Y1	ROD ASSEMBLY—Master (tight fit bearing type).....	1	1	–	–	1	1	1	1	1	1
			Factory installed on all -40B, -65, -73 and -95 engines and on the following engines:										
			-40 (31651 to 31674, 31676 to 31722, 45777 to 45876, 45879 to 45928, 45932 to 45934, 94528 to 94547, 152790 to 152799, 152818 to 152820 and 152854 to 152903)										
			-71 (41296 to 41298, 41418, 41442, 41443, 41469 to 41486, 41510 to 41512, 44231 to 44242, 44296 to 44307, 45545 to 45549, 45560, 152629 to 152643, 152650 to 152667, 152777 to 152786, 152802 to 152805, 152814 to 152817, 152824 to 152853 and 152944 to 152949)										
			-87 (47457 to 47466, 73155 to 73228, 73280 to 73303, 79867 to 80136, 80302 to 80360, 86997 to 87478, 87509 to 87532, 87546 to 87617, 87627 to 87643, 87659 to 87762, 87777 to 87802, 87815 to 87844, 87848 to 87852, 93880 to 94143, 152821 to 152823 and 153086 to 153095)										
			-97 (47467, 69425 to 72820, 72881 to 73026, 73153, 73154, 80792 to 80934, 80990 to 81084, 81105 to 81164, 81340 to 81377, 81712 to 81797, 81978 to 82306 and 190066 to 190110)										
			411263Y1 is used with and includes tight fit bearing 67297.										
			Read note under heading "Connecting Rods."										
			Use Description Remove Quant.										
			423222 Rod Assembly—Master 411263Y1 1										
			117971 Bearing—Master rod 1										
			If crankpin wear requires a .004 in. undersize bearing, 117971Y1 should be used.										
		@ 420046	ROD ASSEMBLY—Master (loose prefit bearing type).....	1	–	1	1	–	1	–	1	–	1
			Factory installed on all -60 engines and on the following engines:										
			-40 (94548 to 94567 and 152904 to 152943)										
			-54 (86727 to 86866 and 429167 to 429193)										
			-71 (41513, 41514, 152644 to 152649, 152787, 152810 to 152813 and 152950 to 153085)										
			-87 (87479 to 87508, 87618 to 87626, 87644 to 87658, 87763 to 87776, 87803 to 87814, 87845 to 87847, 87853 to 87857, 88098 to 88167, 94144 to 94527, 94568 to 94577, 152491 to 152555, 153096 to 153210, 183060 to 183146 and 189949 to 190065)										
			-97 (72821 to 72880, 73027 to 73152, 80787 to 80791, 80935 to 80989, 81165 to 81234, 81236 to 81339, 81378 to 81711, 81798 to 81977 and 190111 to 190522)										
			Used with but does not include loose prefit bearing 117971.										
			Read note under heading "Connecting Rods."										
			Superseded by 423222.										

AVIATIONBOOKS
WWW.AVIATIONBOOKS.COM

Fig. No.	Index Number	Part Number	Nomenclature 1 2 3 4 5 6 7	Units Per Assy—Model R1820 -40 -40B -54 -60 -65 -71 -73 -87 -95 -97
		420488	ROD ASSEMBLY—Master (loose prefit bearing type)..... *Factory installed on -97 engines 81085 to 81104.* *Used with but does not include loose prefit bearing 117971.* *Read note under heading "Connecting Rods."*	– – – – – – – – – 1
37	3700	423222	ROD ASSEMBLY—Master (loose prefit bearing type)..... *Factory installed on the following engines:* -54 (429194 to 429376 and 452267 to 452378) *Read note under heading "Connecting Rods."*	1 1 1 1 1 1 1 1 1 1
		* 67842	ROD—Master..... *Part of assembly 411263Y1.*	1 1 – – 1 1 1 1 1 1
		* 118195	ROD—Master..... *Part of assembly 420046.*	1 – 1 1 – 1 – 1 – 1
		* 118865	ROD—Master..... *Part of assembly 420488.*	– – – – – – – – – 1
		* 128573	ROD—Master..... *Part of assembly 423222.*	1 1 1 1 1 1 1 1 1 1
		67297	BEARING—Master rod crankshaft (tight fit type)..... *Part of assembly 411263Y1.* *Read note under heading "Connecting Rods."*	1 1 – – 1 1 1 1 1 1
		67297Y1	BEARING—Same as 67297 except .002 in. OS OD, standard ID.....	AR AR – – AR AR AR AR AR AR
		67297Y2	BEARING—Same as 67297 except .005 in. OS OD, standard ID.....	AR AR – – AR AR AR AR AR AR
		67297Y3	BEARING—Same as 67297 except .010 in. OS OD, standard ID.....	AR AR – – AR AR AR AR AR AR
		67297Y15	BEARING—Same as 67297 except standard OD, .015 in. US ID.....	AR AR – – AR AR AR AR AR AR
		67297Y16	BEARING—Same as 67297 except .002 in. OS OD, .015 in. US ID.....	AR AR – – AR AR AR AR AR AR
		6729Y17	BEARING—Same as 67297 except .005 in. OS OD, .015 in. US ID.....	AR AR – – AR AR AR AR AR AR
		67297Y18	BEARING—Same as 67297 except .010 in. OS OD, .015 in. US ID.....	AR AR – – AR AR AR AR AR AR

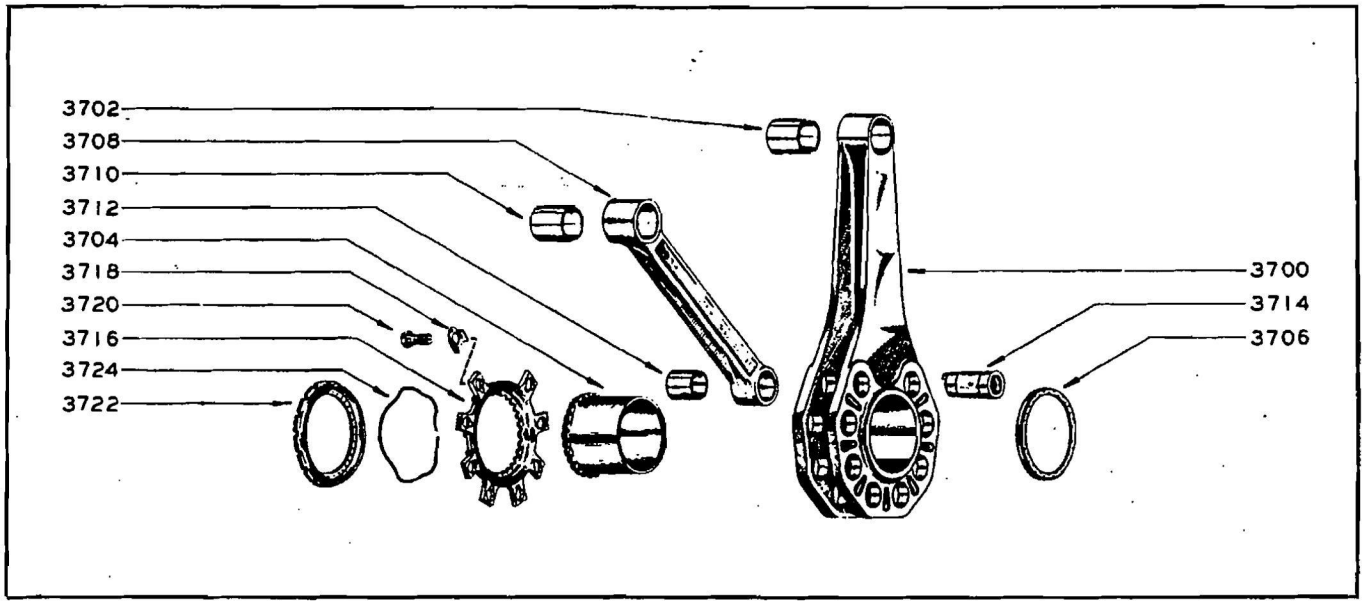

Numbers shown are index numbers and are numerically arranged in the Group Assembly Parts List

Figure 37—Connecting Rods

AVIATORS WWW.AVIATORS.COM

Fig. No.	Index Number	Part Number	Nomenclature 1 2 3 4 5 6 7	Units Per Assy—Model R1820 -40	-40B	-54	-60	-65	-71	-73	-87	-95	-97
37	3702	2119D17	BUSHING—Master rod piston pin.....	1	1	1	1	1	1	1	1	1	1
37	3704	117971	BEARING—Master rod crankshaft (loose prefit type)..... *Read note under heading "Connecting Rods."*	1	1	1	1	1	1	1	1	1	1
		117971Y1	BEARING—Same as 117971 except .004 in. US ID, standard OD.....	AR	AR	AR	AR	AR	AR	AR	AR	AR	AR
		117971Y2	BEARING—Same as 117971 except .008 in. US ID, standard OD.....	AR	AR	AR	AR	AR	AR	AR	AR	AR	AR
		117971Y3	BEARING—Same as 117971 except .012 in. US ID, standard OD.....	AR	AR	AR	AR	AR	AR	AR	AR	AR	AR
		117971Y4	BEARING—Same as 117971 except .016 in. US ID, standard OD.....	AR	AR	AR	AR	AR	AR	AR	AR	AR	AR
		117971Y5	BEARING—Same as 117971 except .020 in. US ID, standard OD.....	AR	AR	AR	AR	AR	AR	AR	AR	AR	AR
		117971Y10	BEARING—Same as 117971 except standard ID, .005 in. OS OD.....	AR	AR	AR	AR	AR	AR	AR	AR	AR	AR
		117971Y11	BEARING—Same as 117971 except .004 in. US ID, .005 in. OS OD.....	AR	AR	AR	AR	AR	AR	AR	AR	AR	AR
		117971Y12	BEARING—Same as 117971 except .008 in. US ID, .005 in. OS OD.....	AR	AR	AR	AR	AR	AR	AR	AR	AR	AR
		117971Y13	BEARING—Same as 117971 except .012 in. US ID, .005 in. OS OD.....	AR	AR	AR	AR	AR	AR	AR	AR	AR	AR
		117971Y14	BEARING—Same as 117971 except .016 in. US ID, .005 in. OS OD.....	AR	AR	AR	AR	AR	AR	AR	AR	AR	AR
		117971Y15	BEARING—Same as 117971 except .020 in. US ID, .005 in. OS OD.....	AR	AR	AR	AR	AR	AR	AR	AR	AR	AR
		117971Y20	BEARING—Same as 117971 except standard ID, .010 in. OS OD.....	AR	AR	AR	AR	AR	AR	AR	AR	AR	AR
		117971Y21	BEARING—Same as 117971 except .004 in. US ID, .010 in. OS OD.....	AR	AR	AR	AR	AR	AR	AR	AR	AR	AR
		117971Y22	BEARING—Same as 117971 except .008 in. US ID, .010 in. OS OD.....	AR	AR	AR	AR	AR	AR	AR	AR	AR	AR
		117971Y23	BEARING—Same as 117971 except .012 in. US ID, .010 in. OS OD.....	AR	AR	AR	AR	AR	AR	AR	AR	AR	AR
		117971Y24	BEARING—Same as 117971 except .016 in. US ID, .010 in. OS OD.....	AR	AR	AR	AR	AR	AR	AR	AR	AR	AR
		117971Y25	BEARING—Same as 117971 except .020 in. US ID, .010 in. OS OD.....	AR	AR	AR	AR	AR	AR	AR	AR	AR	AR
		@ 67843	SPACER—Master rod..... *Factory installed on the following engines:* *-65* (29898 to 29997, 30018 to 30045, 41102 to 41122 and 41124 to 41133) *Superseded by 117547.*	–	–	–	–	1	–	–	–	–	–
		@ 113226	SPACER—Master rod..... *Factory installed on all -73 engines and on the following engines:* *-40* (31669, 31670, 31673, 31674, 31710 to 31722, 45777 to 45806, 45837 to 45928 and 45932 to 45934) *-65* (29347, 30046 to 30050, 41136 to 41267, 44242 to 44295 and 44311 to 44487) *-71* (41296 to 41298, 41418, 41487 to 41506, 44231 to 44241 and 44296 to 44307) *-87* (73155 to 73167) *-95* (31732, 31733, 31741 to 31748, 31750 to 31752, 31805, 31812, 31814, 31818 and 31823) *Superseded by 117547.*	1	–	–	–	1	1	1	1	1	–

AVIATIONS
www.aviations.com

Fig. No.	Index Number	Part Number	Nomenclature 1 2 3 4 5 6 7	Units Per Assy—Model R1820 -40	-40B	-54	-60	-65	-71	-73	-87	-95	-97
		@ 113173	SPACER—Master rod..... *Factory installed on all -40B engines and on the following engines:* *-40* (31651 to 31668, 31671, 31672, 31676 to 31709, 45807 to 45836, 94528 to 94567, 152790 to 152799 and 152854 to 152943) *-54* (80727 to 80793) *-60* (47468, 47469, 73229 to 73279, 73304 to 73429, 73432 to 73914, 80137 to 80166, 88168 to 88196, 155763 to 155817, 155824 to 155879, 156289 to 158093, 183147 to 183464, 425321 to 425905, 425916 to 426095, 426207 to 426275, 426284 to 426303 and 426364 to 426720) *-65* (44488 to 45387, 45394 to 45399, 45401 to 45474 and 45939 to 47456) *-71* (41442, 41443, 41469 to 41486, 41510 to 41514, 45545 to 45549, 45560, 152629 to 152667, 152772 to 152787, 152802 to 152805, 152810 to to 152817, 152824 to 152839, 152812 to 152853 and 152944 to 153065) *-87* (47457 to 47466, 73168 to 73228, 73280 to 73303, 79867 to 80136, 80302 to 80360, 86997 to 87532, 87546 to 87857, 88098 to 88167, 93880 to 94527, 94568 to 94577, 152491 to 152555, 152821 to 152823, 153086 to 153210, 183060 to 183146 and 189949 to 190065) *-95* (80373 to 80376) *-97* (47467, 69425 to 73154, 80787 to 81084, 81105 to 81234, 81236 to 82306 and 190066 to 190522) *Superseded by 117547.*	1	1	1	1	1	1	–	1	–	–
37	3706	117547	SPACER—Master rod..... *Factory installed on the following engines:* *-54* (80794 to 86866, 429167 to 429376 and 452267 to 452378) *-60* (80167 to 80279, 425906 to 425915, 426096 to 426206, 426276 to 426283 and 426304 to 426363) *-71* (153066 to 153085) *-97* (81085 to 81104)	1	1	1	1	1	1	1	1	1	1
		117547Y1	SPACER—Same as 117547 except .005 in. OS thickness, standard ID lip.....	AR	AR	AR	AR	AR	AR	AR	AR	AR	AR
		117547Y2	SPACER—Same as 117547 except .010 in. OS thickness, standard ID lip.....	AR	AR	AR	AR	AR	AR	AR	AR	AR	AR
		117547Y3	SPACER—Same as 117547 except .020 in. OS thickness, standard ID lip.....	AR	AR	AR	AR	AR	AR	AR	AR	AR	AR
		117547Y4	SPACER—Same as 117547 except .030 in. OS thickness, standard ID lip.....	AR	AR	AR	AR	AR	AR	AR	AR	AR	AR
		117547Y5	SPACER—Same as 117547 except .040 in. OS thickness, standard ID lip.....	AR	AR	AR	AR	AR	AR	AR	AR	AR	AR
		117547Y6	SPACER—Same as 117547 except .050 in. OS thickness, standard ID lip.....	AR	AR	AR	AR	AR	AR	AR	AR	AR	AR
		117547Y10	SPACER—Same as 117547 except standard thickness, .005 in. US ID lip.....	AR	AR	AR	AR	AR	AR	AR	AR	AR	AR
		117547Y12	SPACER—Same as 117547 except .010 in. OS thickness, .005 in. US ID lip.....	AR	AR	AR	AR	AR	AR	AR	AR	AR	AR
		117547Y14	SPACER—Same as 117547 except .030 in. OS thickness, .005 in. US ID lip.....	AR	AR	AR	AR	AR	AR	AR	AR	AR	AR
		117547Y20	SPACER—Same as 117547 except standard thickness, .010 in. US ID lip.....	AR	AR	AR	AR	AR	AR	AR	AR	AR	AR
		117547Y22	SPACER—Same as 117547 except .010 in. OS thickness, .010 in. US ID lip.....	AR	AR	AR	AR	AR	AR	AR	AR	AR	AR

AVIATIONS
WWW.AVIATIONS.COM

Fig. No.	Index Number	Part Number	Nomenclature 1 2 3 4 5 6 7	Units Per Assy—Model R1820 -40	-40B	-54	-60	-65	-71	-73	-87	-95	-97
		117547Y24	SPACER—Same as 117547 except .030 in. OS thickness, .010 in. US ID lip	AR	AR	AR	AR	AR	AR	AR	AR	AR	AR
		117547Y30	SPACER—Same as 117547 except standard thickness, .015 in. US ID lip	AR	AR	AR	AR	AR	AR	AR	AR	AR	AR
		117547Y32	SPACER—Same as 117547 except .010 in. OS thickness, .015 in. US ID lip	AR	AR	AR	AR	AR	AR	AR	AR	AR	AR
		117547Y34	SPACER—Same as 117547 except .030 in. OS thickness, .015 in. US ID lip	AR	AR	AR	AR	AR	AR	AR	AR	AR	AR
		117547Y40	SPACER—Same as 117547 except standard thickness, .020 in. US ID lip	AR	AR	AR	AR	AR	AR	AR	AR	AR	AR
		117547Y42	SPACER—Same as 117547 except .010 in. OS thickness, .020 in. US ID lip	AR	AR	AR	AR	AR	AR	AR	AR	AR	AR
		117547Y44	SPACER—Same as 117547 except .030 in. OS thickness, .020 in. US ID lip	AR	AR	AR	AR	AR	AR	AR	AR	AR	AR
		48672	ROD AND BUSHING ASSEMBLY—Articulated *Not factory installed on the following engines but installed on all others not specifically mentioned.* *-54* (86794 to 86866 and 429167 to 429193) *-60* (80227 to 80279, 425906 to 425915, 426096 to 426206, 426276 to 426283, 426304 to 426363 and 454477 to 455407) *-71* (153066 to 153085) *-97* (81085 to 81104)	8	8	8	8	8	8	8	8	8	8
37	3708	415579	ROD AND BUSHING ASSEMBLY—Articulated *Factory installed on the following engines:* *-54* (86794 to 86866, 429167 to 429376 and 452267 to 452378) *-60* (80227 to 80279, 425906 to 425915, 426096 to 426206, 426276 to 426283, 426304 to 426363 and 454477 to 455407) *-71* (153066 to 153085) *-97* (81085 to 81104) *For replacement on Army engines use 423269.*	–	–	8	8	–	8	–	–	–	8
		423269	ROD AND BUSHING ASSEMBLY—Articulated	–	–	–	8	–	8	–	–	–	8
	*	64904	ROD—Articulated *Part of assembly 48672.*	1	1	1	1	1	1	1	1	1	1
	*	113259	ROD—Articulated *Part of assemblies 415579 and 423269.*	–	–	1	1	–	1	–	–	–	1
37	3710	2119D17	BUSHING—Articulated rod piston pin	1	1	1	1	1	1	1	1	1	1
37	3712	2119D12	BUSHING—Articulated rod knuckle pin	1	1	1	1	1	1	1	1	1	1
	@	69116	PIN—Knuckle *Factory installed on all -73 engines and on the following engines:* *-40* (31651 to 31674, 31676 to 31722, 45777 to 45876, 45879 to 45928 and 45932 to 45934) *-65* (29347, 29898 to 29997, 30018 to 30050, 41102 to 41122, 41124 to 41133, 41136 to 41267, 44242 to 44295, 44311 to 45387, 45394 to 45399, 45401 to 45474 and 45939 to 46672) *-71* (41296 to 41298, 41418, 41487 to 41506, 44231 to 44241 and 44296 to 44307) *-87* (73155 to 73167) *-95* (31732, 31733, 31741 to 31748, 31750 to 31752, 31805, 31812, 31814, 31818 and 31823) *69116 has the thread starting .230 in. from the end and continuing to a depth of .520 in.* *For replacement, make the following substitutions:* Use *118738* Description *Pin—Knuckle* Remove *69116* Quant. *1*	8	–	–	–	8	8	8	8	8	–

AVIALOGS
WWW.AVIALOGS.COM

Fig. No.	Index Number	Part Number	Nomenclature 1 2 3 4 5 6 7	Units Per Assy—Model R1820 -40	-40B	-54	-60	-65	-71	-73	-87	-95	-97
			2045D44 Screw—Knuckle pin lock 2045D24 1										
		@ 117037	PIN—Knuckle..... *Factory installed on the following engines:* *-40* (94533, 94534, 152790 to 152799 and 152854 to 152863) *-40B* (94578 to 94587) *-65* (46673 to 47456) *-71* (41471, 41472, 45545 to 45549, 45560, 152629, 152630, 152650 to 152654, 152772 to 152776, 152802 to 152805, 152834 to 152839 and 152842 to 152844) *-87* (73168 to 73177, 73280 to 73303, 86997 to 87005, 87546 to 87565 and 93880 to 93905) *-95* (80373 to 80376) *-97* (69425 to 70802, 70810 to 70816, 70865 to 71301 and 71387 to 71465) *117037 has the thread starting .230 in. from the end and continuing to a depth of .470 in.* *For replacement, make the following substitutions:* Use Description Remove Quant. *118738 Pin—Knuckle 117037 1* *2045D44 Screw—Knuckle pin lock 2045D24 1*	8	8	–	–	8	8	–	8	8	8
		@ 115788	PIN—Knuckle..... *Factory installed on all -54 and -60 engines and on the following engines:* *-40* (94528 to 94532, 94535 to 94567, 152818 to 152820 and 152864 to 152943) *-40B* (80361 to 80372 and 94588 to 94682) *-71* (41442, 41443, 41469, 41470, 41473 to 41486, 41510 to 41514, 152631 to 152649, 152655 to 152667, 152777 to 152787, 152810 to 152817, 152824 to 152833, 152845 to 152853 and 152944 to 153085) *-87* (47457 to 47466, 73178 to 73228, 79867 to 80136, 80302 to 80360, 87006 to 87532, 87566 to 87857, 88098 to 88167, 93906 to 94527, 94568 to 94577, 152491 to 152555, 152821 to 152823, 153086 to 153210, 183060 to 183146 and 189949 to 190065) *-97* (47467, 70803 to 70809, 70817 to 70864, 71302 to 71386, 71465 to 73154, 80787 to 81234, 81236 to 82306 and 190066 to 190522) *115788 includes oil flats and has the thread starting flush with the end and continuing to a depth of .235 in.* *Superseded by 118738.*	8	8	8	8	–	8	–	8	–	8
37	3714	118738	PIN—Knuckle..... *Not factory installed on any engines.* *Supersedes and supplied for replacement of 69116, 117037 and 115788.* *118738 does not have oil flats but has the thread starting flush with the end and continuing to a depth of .235 in.*	8	8	8	8	8	8	8	8	8	8
37	3716	68154	PLATE—Knuckle pin locking.....	1	1	1	1	1	1	1	1	1	1
37	3718	67860	LOCK—Knuckle pin.....	8	8	8	8	8	8	8	8	8	8
		2045D24	SCREW—Knuckle pin lock (.79 in. long)..... *Used with knuckle pins 69116 and 117037.*	8	8	–	–	8	8	8	8	8	8
37	3720	2045D44	SCREW—Knuckle pin lock (.500 in. long)..... *Used with knuckle pins 115788 and 118738.*	8	8	8	8	8	8	8	8	8	8
		@ 110516	DISC—Master rod oil seal (early type)..... *Superseded by 113154.*	1	–	–	–	1	–	–	–	1	–

Fig. No.	Index Number	Part Number	Nomenclature 1 2 3 4 5 6 7	Units Per Assy—Model R1820 -40	-40B	-54	-60	-65	-71	-73	-87	-95	-97
37	3722	113154	DISC—Master rod oil seal (late type).....	1	1	1	1	1	1	1	1	1	1
		113154Y1	DISC—Same as 113154 except .005 in. OS Kelmit face thickness, standard OD.....	AR	AR	AR	AR	AR	AR	AR	AR	AR	AR
		113154Y2	DISC—Same as 113154 except .010 in. OS Kelmit face thickness, standard OD.....	AR	AR	AR	AR	AR	AR	AR	AR	AR	AR
		113154Y5	DISC—Same as 113154 except standard Kelmit face thickness, .005 in. OS OD.....	AR	AR	AR	AR	AR	AR	AR	AR	AR	AR
		113154Y6	DISC—Same as 113154 except .005 in. OS Kelmit face thickness, .005 in. OS OD.....	AR	AR	AR	AR	AR	AR	AR	AR	AR	AR
		113154Y7	DISC—Same as 113154 except .010 in. OS Kelmit face thickness, .005 in. OS OD.....	AR	AR	AR	AR	AR	AR	AR	AR	AR	AR
		113154Y10	DISC—Same as 113154 except standard Kelmit face thickness, .010 in. OS OD.....	AR	AR	AR	AR	AR	AR	AR	AR	AR	AR
		113154Y11	DISC—Same as 113154 except .005 in. OS Kelmit face thickness, .010 in. OS OD.....	AR	AR	AR	AR	AR	AR	AR	AR	AR	AR
		113154Y12	DISC—Same as 113154 except .010 in. OS Kelmit face thickness, .010 in. OS OD.....	AR	AR	AR	AR	AR	AR	AR	AR	AR	AR
37	3724	67302	SPRING—Master rod oil seal disc.....	1	1	1	1	1	1	1	1	1	1

CYLINDERS, INTAKE PIPES, PISTONS AND AIR DEFLECTORS

CYLINDERS

Worn cylinders can be reground to .015 in. oversize only.

@ 89979N1	CYLINDER ASSEMBLY—With valves and valve rockers (less covers)..... *Factory installed on all -73 engines and on the following engines:* *-71* (41296 to 41298, 41418, 41487 to 41506, 44231 to 44241 and 44296 to 44307) *Superseded by 890728.*	–	–	–	–	–	9	9	–	–	–
@ 89979N2	CYLINDER ASSEMBLY—With valves and valve rockers (less covers)..... *Factory installed on the following engines:* *-40* (31651 to 31674, 31676 to 31722, 45777 to 45876, 45879 to 45928 and 45932 to 45934) *-65* (29347, 29898 to 29997, 30018 to 30050, 41102 to 41122, 41124 to 41133, 41136 to 41267, 44242 to 44295, 44311 to 45387, 45394 to 45399, 45401 to 45474, 45939 to 46772 and 47273 to 47322) *-87* (73155 to 73167) *-95* (31732, 31733, 31741 to 31748, 31750 to 31752, 31805, 31812, 31814, 31818 and 31823) *Superseded by 890728.*	9	–	–	–	9	–	–	9	9	–
@ 890118	CYLINDER ASSEMBLY—With valves and valve rockers (less covers)..... *Factory installed on all -40B, -60 and -97 engines and on the following engines:* *-40* (94528 to 94567, 152790 to 152799, 152818 to 152820 and 152854 to 152943) *-54* (86727 to 86866, 429167, 429168, 429194 to 429376, 452267 to 452270 and 452289 to 452378) *-65* (46773 to 47272 and 47323 to 47456) *-71* (41442, 41443, 41469 to 41486, 41510 to 41514, 45545 to 45549, 45560, 152629 to 152667, 152772 to 152787, 152802 to 152805, 152810 to 152817, 152824 to 152839, 152842 to 152853 and 152944 to 153085)	9	9	9	9	9	9	9	9	9	9

AVIALOGS
WWW.AVIALOGS.COM

Fig. No.	Index Number	Part Number	Nomenclature 1 2 3 4 5 6 7	Units Per Assy—Model R1820 -40 -40B -54 -60 -65 -71 -73 -87 -95 -97

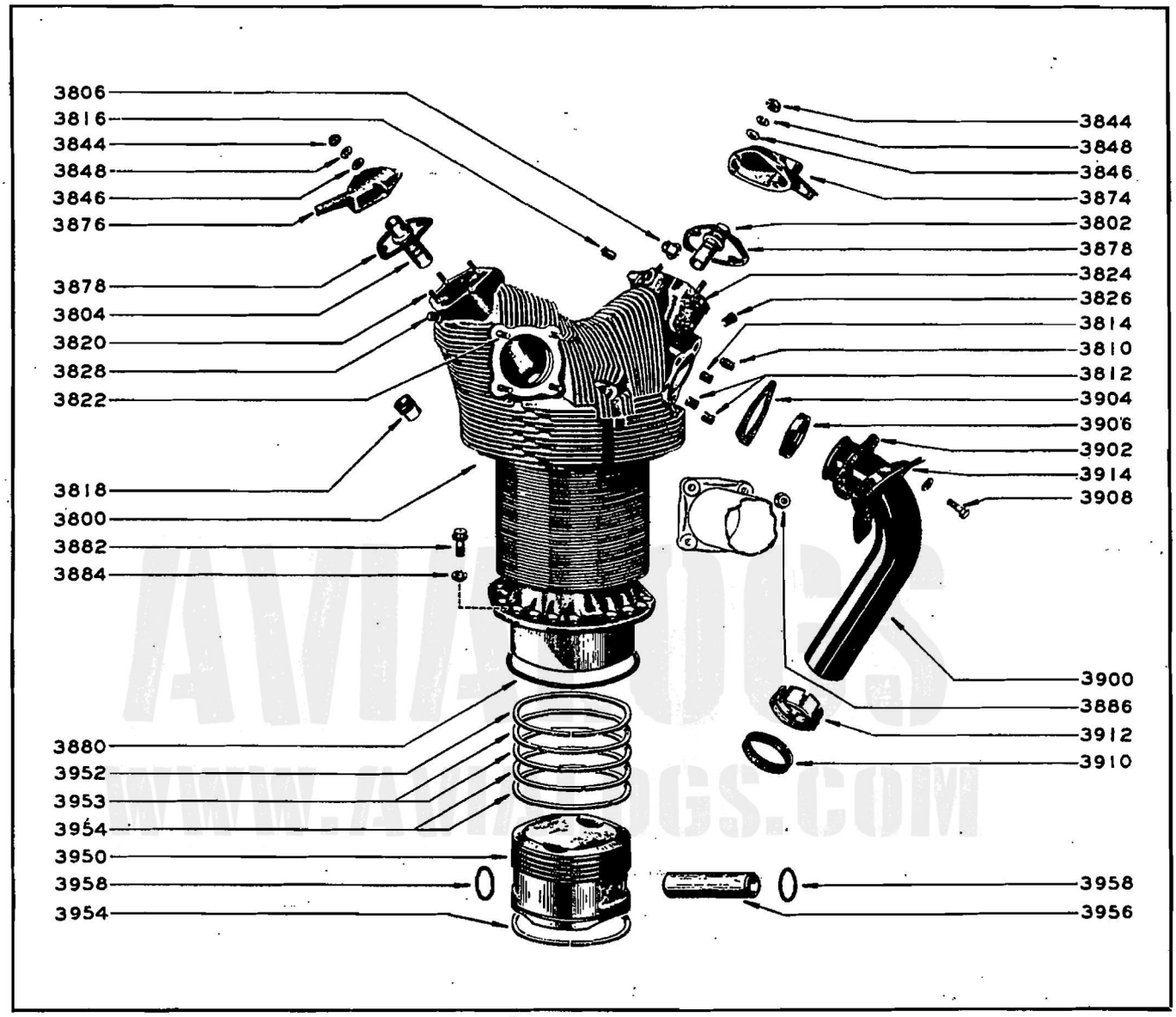

Numbers shown are index numbers and are numerically arranged in the Group Assembly Parts List

Figure 38—Cylinder, Intake Pipe and Piston

-87 (47457 to 47466, 73168 to 73228, 73280 to 73303, 79867 to 80136, 80302 to 80360, 86997 to 87532, 87546 to 87857, 88098 to 88167, 93880 to 94527, 94568 to 94577, 152491 to 152555, 152821 to 152823, 153086 to 153210, 183060 to 183146 and 189949 to 190065)

-95 (80373 to 80376)

Superseded by 890728.

(890725) *Cylinder assembly 890118 and piston assembly 423036 can be ordered as assembly 890725 for use on all engines except -97.*

(890555) *Cylinder assembly 890118 and piston assembly 421075 can be ordered as assembly 890555 for use on all -97 engines.*

Fig. No.	Index Number	Part Number	Nomenclature 1 2 3 4 5 6 7	Units Per Assy—Model R1820 -40	-40B	-54	-60	-65	-71	-73	-87	-95	-97
		890728	CYLINDER ASSEMBLY—With valves and valve rockers (less covers).....	9	9	9	9	9	9	9	9	9	9
			Factory installed on the following engines: *-54* (429169 to 429193 and 452271 to 452288)										
		(890740)	*Cylinder assembly 890728 and piston assembly 423036 can be ordered as assembly 890740.*										
		@ 414565N1	CYLINDER MACHINING AND STUDDING ASSEMBLY.....	–	–	–	–	–	1	1	–	–	–
			Part of assembly 89979N1. *Superseded by 414565N2.*										
38	3800	414565N2	CYLINDER MACHINING AND STUDDING ASSEMBLY.....	1	1	1	1	1	1	1	1	1	1
			Part of assemblies 89979N2, 890118 and 890728.										
		* 112096	HEAD—Cylinder.....	1	1	1	1	1	1	1	1	1	1
		* 112094	BARREL—Cylinder.....	1	1	1	1	1	1	1	1	1	1
		¢ 110046	SEAT—Intake valve.....	1	1	1	1	1	1	1	1	1	1
		110046Y2	SEAT—Same as 110046 except .010 in. OS OD.....	AR	AR	AR	AR	AR	AR	AR	AR	AR	AR
		110046Y3	SEAT—Same as 110046 except .020 in. OS OD.....	AR	AR	AR	AR	AR	AR	AR	AR	AR	AR
		110046Y4	SEAT—Same as 110046 except .030 in. OS OD.....	AR	AR	AR	AR	AR	AR	AR	AR	AR	AR
		110046Y5	SEAT—Same as 110046 except .040 in. OS OD.....	AR	AR	AR	AR	AR	AR	AR	AR	AR	AR
		¢ 110080	SEAT—Exhaust valve.....	1	1	1	1	1	1	1	1	1	1
		110080Y2	SEAT—Same as 110080 except .010 in. OS OD.....	AR	AR	AR	AR	AR	AR	AR	AR	AR	AR
		110080Y3	SEAT—Same as 110080 except .020 in. OS OD.....	AR	AR	AR	AR	AR	AR	AR	AR	AR	AR
		110080Y4	SEAT—Same as 110080 except .030 in. OS OD.....	AR	AR	AR	AR	AR	AR	AR	AR	AR	AR
		110080Y5	SEAT—Same as 110080 except .040 in. OS OD.....	AR	AR	AR	AR	AR	AR	AR	AR	AR	AR
		@ 69184	GUIDE—Intake valve (early type).....	1	–	–	–	1	1	1	1	1	–
			Superseded by 113170.										
38	3802	113170	GUIDE—Intake valve (late type).....	1	1	1	1	1	1	1	1	1	1
		113170Y2	GUIDE—Same as 113170 except .005 in. OS OD.....	AR	AR	AR	AR	AR	AR	AR	AR	AR	AR
		113170Y3	GUIDE—Same as 113170 except .010 in. OS OD.....	AR	AR	AR	AR	AR	AR	AR	AR	AR	AR
		113170Y4	GUIDE—Same as 113170 except .020 in. OS OD.....	AR	AR	AR	AR	AR	AR	AR	AR	AR	AR
		113170Y5	GUIDE—Same as 113170 except .030 in. OS OD.....	AR	AR	AR	AR	AR	AR	AR	AR	AR	AR
38	3804	63747	GUIDE—Exhaust valve.....	1	1	1	1	1	1	1	1	1	1
		63747Y2	GUIDE—Same as 63747 except .005 in. OS OD.....	AR	AR	AR	AR	AR	AR	AR	AR	AR	AR
		63747Y3	GUIDE—Same as 63747 except .010 in. OS OD.....	AR	AR	AR	AR	AR	AR	AR	AR	AR	AR
		63747Y4	GUIDE—Same as 63747 except .020 in. OS OD.....	AR	AR	AR	AR	AR	AR	AR	AR	AR	AR
		63747Y5	GUIDE—Same as 63747 except .030 in. OS OD.....	AR	AR	AR	AR	AR	AR	AR	AR	AR	AR
		63747Y6	GUIDE—Same as 63747 except .040 in. OS OD.....	AR	AR	AR	AR	AR	AR	AR	AR	AR	AR
		63747Y7	GUIDE—Same as 63747 except .050 in. OS OD.....	AR	AR	AR	AR	AR	AR	AR	AR	AR	AR
		63747Y8	GUIDE—Same as 63747 except .060 in. OS OD.....	AR	AR	AR	AR	AR	AR	AR	AR	AR	AR
		63747Y9	GUIDE—Same as 63747 except .065 in. OS OD.....	AR	AR	AR	AR	AR	AR	AR	AR	AR	AR
		63747Y10	GUIDE—Same as 63747 except .070 in. OS OD.....	AR	AR	AR	AR	AR	AR	AR	AR	AR	AR
		63747Y11	GUIDE—Same as 63747 except .080 in. OS OD.....	AR	AR	AR	AR	AR	AR	AR	AR	AR	AR
		63747Y12	GUIDE—Same as 63747 except .090 in. OS OD.....	AR	AR	AR	AR	AR	AR	AR	AR	AR	AR
		¢ 62497	INSERT—Spark plug.....	2	2	2	2	2	2	2	2	2	2

AVIATION
WWW.AVIATIONS.COM

Fig. No.	Index Number	Part Number	Nomenclature 1 2 3 4 5 6 7	Units Per Assy—Model R1820 -40	-40B	-54	-60	-65	-71	-73	-87	-95	-97
		62497Y3	INSERT—Same as 62497 except .015 in. OS OD	AR	AR	AR	AR	AR	AR	AR	AR	AR	AR
		62497Y4	INSERT—Same as 62497 except .030 in. OS OD	AR	AR	AR	AR	AR	AR	AR	AR	AR	AR
		62497Y5	INSERT—Same as 62497 except .040 in. OS OD	AR	AR	AR	AR	AR	AR	AR	AR	AR	AR
		13D38	PIN—Spark plug insert retaining	4	4	4	4	4	4	4	4	4	4
38	3806	69510	BUSHING—Rocker arm hub bolt	4	4	4	4	4	4	4	4	4	4
38	3810	¢ 4016D3	BUSHING—Intake pipe flange bolt, screw (blind end)	1	1	1	1	1	1	1	1	1	1
		4016H3	BUSHING—Same as 4016D3 except .003 in. OS OD	AR	AR	AR	AR	AR	AR	AR	AR	AR	AR
		4016S3	BUSHING—Same as 4016D3 except .007 in. OS OD	AR	AR	AR	AR	AR	AR	AR	AR	AR	AR
		4016J3	BUSHING—Same as 4016D3 except .012 in. OS OD	AR	AR	AR	AR	AR	AR	AR	AR	AR	AR
38	3812	¢ 4015D3	BUSHING—Intake pipe flange bolt, screw (open end)	2	2	2	2	2	2	2	2	2	2
		4015H3	BUSHING—Same as 4015D3 except .003 in. OS OD	AR	AR	AR	AR	AR	AR	AR	AR	AR	AR
		4015S3	BUSHING—Same as 4015D3 except .007 in. OS OD	AR	AR	AR	AR	AR	AR	AR	AR	AR	AR
		4015J3	BUSHING—Same as 4015D3 except .012 in. OS OD	AR	AR	AR	AR	AR	AR	AR	AR	AR	AR
38	3814	¢ 4015D2	BUSHING—Cylinder head air deflector screw, screw (open end)	1	1	1	1	1	1	1	1	1	1
		4015H2	BUSHING—Same as 4015D2 except .003 in. OS OD	AR	AR	AR	AR	AR	AR	AR	AR	AR	AR
		4015S2	BUSHING—Same as 4015D2 except .007 in. OS OD	AR	AR	AR	AR	AR	AR	AR	AR	AR	AR
		4015J2	BUSHING—Same as 4015D2 except .012 in. OS OD	AR	AR	AR	AR	AR	AR	AR	AR	AR	AR
38	3816	¢ 4028D2	BUSHING—Cylinder head air deflector screw, screw (blind end)	2	2	2	2	2	2	2	2	2	2
		4028S2	BUSHING—Same as 4028D2 except .003 in. OS OD	AR	AR	AR	AR	AR	AR	AR	AR	AR	AR
		4028H2	BUSHING—Same as 4028D2 except .007 in. OS OD	AR	AR	AR	AR	AR	AR	AR	AR	AR	AR
		4028J2	BUSHING—Same as 4028D2 except .012 in. OS OD	AR	AR	AR	AR	AR	AR	AR	AR	AR	AR
38	3818	68590	CONNECTION—Push rod housing hose	2	2	2	2	2	2	2	2	2	2
38	3820	¢ 2136D55	STUD—Cylinder to rocker box cover	8	8	8	8	8	8	8	8	8	8
		2136H55	STUD—Same as 2136D55 except .003 in. OS OD	AR	AR	AR	AR	AR	AR	AR	AR	AR	AR
		2136S55	STUD—Same as 2136D55 except .007 in. OS OD	AR	AR	AR	AR	AR	AR	AR	AR	AR	AR
		2136J55	STUD—Same as 2136D55 except .012 in. OS OD	AR	AR	AR	AR	AR	AR	AR	AR	AR	AR
38	3822	¢ 2145D95	STUD—Cylinder to exhaust pipe flange	4	4	4	4	4	4	4	4	4	4
		2145H95	STUD—Same as 2145D95 except .003 in. OS OD	AR	AR	AR	AR	AR	AR	AR	AR	AR	AR
		2145S95	STUD—Same as 2145D95 except .007 in. OS OD	AR	AR	AR	AR	AR	AR	AR	AR	AR	AR
		2145J95	STUD—Same as 2145D95 except .012 in. OS OD	AR	AR	AR	AR	AR	AR	AR	AR	AR	AR
38	3824	¢ 2146D55	STUD—Cylinder to nose cowl	1	1	1	1	1	1	1	1	1	1
		2146H55	STUD—Same as 2146D55 except .003 in. OS OD	AR	AR	AR	AR	AR	AR	AR	AR	AR	AR
		2146S55	STUD—Same as 2146D55 except .007 in. OS OD	AR	AR	AR	AR	AR	AR	AR	AR	AR	AR
		2146J55	STUD—Same as 2146D55 except .012 in. OS OD	AR	AR	AR	AR	AR	AR	AR	AR	AR	AR
38	3826	4042D1	PLUG—Cylinder head priming connection hole	1	1	1	1	1	1	1	1	1	1
38	3828	36D7	PLUG—Rocker box oil tube boss substituting	2	2	2	2	2	2	2	2	2	2
		118386	TUBE—Cylinder head fin	1	1	1	1	1	1	1	1	1	1

Part of assembly 414565N2.

Fig. No.	Index Number	Part Number	Nomenclature 1 2 3 4 5 6 7	Units Per Assy—Model R1820 -40	-40B	-54	-60	-65	-71	-73	-87	-95	-97
		@ 49206	ARM ASSEMBLY COMPLETE—Rocker, intake valve..... *Part of assemblies 89979N1 and 89979N2.* *Superseded by 417937N2.*	1	–	–	–	1	1	1	1	1	–
		417937N2	ARM ASSEMBLY COMPLETE—Rocker, intake valve..... *Part of assemblies 890118 and 890728.*	1	1	1	1	1	1	1	1	1	1
		@ 49207	ARM ASSEMBLY COMPLETE—Rocker, exhaust valve..... *Part of assemblies 89979N1 and 89979N2.* *Superseded by 421645N2.*	1	–	–	–	1	1	1	1	1	–
		@ 418203N2	ARM ASSEMBLY COMPLETE—Rocker, exhaust valve..... *Part of assembly 890118.* *Supersedes 418203N1.* *Superseded by 421645N2.*	1	1	1	1	1	1	1	1	1	1
		421645N2	ARM ASSEMBLY COMPLETE—Rocker, exhaust valve..... *Part of assembly 890728.*	1	1	1	1	1	1	1	1	1	1
		@ 89608	ARM ASSEMBLY—Rocker, intake valve..... *Part of assembly 49206.* *Superseded by 890044.*	1	–	–	–	1	1	1	1	1	–
		890044	ARM ASSEMBLY—Rocker, intake valve..... *Part of assembly 417937N2.*	1	1	1	1	1	1	1	1	1	1
		@ 89609	ARM ASSEMBLY—Rocker, exhaust valve..... *Part of assembly 49207.* *Superseded by 890526.*	1	–	–	–	1	1	1	1	1	–
		@ 890045	ARM ASSEMBLY—Rocker, exhaust valve..... *Part of assembly 418203N2.* *Superseded by 890526.*	1	1	1	1	1	1	1	1	1	1
46	3830	890526	ARM ASSEMBLY—Rocker, exhaust valve..... *Part of assembly 421645N2.*	1	1	1	1	1	1	1	1	1	1
		* 65656	ARM—Rocker, intake valve..... *Part of assembly 89608.*	1	–	–	–	1	1	1	1	1	–
		* 113862	ARM—Rocker, intake valve..... *Part of assembly 890044.*	1	1	1	1	1	1	1	1	1	1
		* 65668	ARM—Rocker, exhaust valve..... *Part of assembly 89609.*	1	–	–	–	1	1	1	1	1	–
		* 113863	ARM—Rocker, exhaust valve..... *Part of assembly 890045.*	1	1	1	1	1	1	1	1	1	1
		* 127351	ARM—Rocker, exhaust valve..... *Part of assembly 890526.*	1	1	1	1	1	1	1	1	1	1
46	3832	23065	ROLLER—Rocker arm.....	1	1	1	1	1	1	1	1	1	1
46	3834	23066	HUB—Rocker arm roller.....	1	1	1	1	1	1	1	1	1	1
46	3836	29D11	PIN—Rocker arm roller hub.....	1	1	1	1	1	1	1	1	1	1
		46D13	SCREW—Valve clearance adjusting screw lock (standard hexagon head)..... *Part of assemblies 89608 and 89609.*	1	–	–	–	1	1	1	1	1	–
46	3838	113861	SCREW—Valve clearance adjusting screw lock (hexagon head with taper under head)..... *Part of assemblies 890044, 890045 and 890526.*	1	1	1	1	1	1	1	1	1	1
		189D58	LOCKWASHER—Valve clearance adjusting screw lock screw... *Used with screw 46D13.*	1	–	–	–	1	1	1	1	1	–
46	3840	62773	SCREW—Valve clearance adjusting....	1	1	1	1	1	1	1	1	1	1
		65843	BEARING—Rocker arm, intake..... *Part of assemblies 49206 and 417937N2.* *Supersedes and supplied for replacement of 65657 used on some engines at this location.*	1	1	1	1	1	1	1	1	1	1

AVIATORS
WWW.AVIATORS.COM

Fig. No.	Index Number	Part Number	Nomenclature 1 2 3 4 5 6 7	Units Per Assy—Model R1820 -40	-40B	-54	-60	-65	-71	-73	-87	-95	-97
		@ 65657	BEARING—Rocker arm, exhaust (early type)..... *Part of assemblies 49207 and 418203N1. See note under 418203N2. Superseded by 114141.*	1	1	1	1	1	1	1	1	1	1
46	3842	114141	BEARING—Rocker arm, exhaust (late type)..... *Part of assemblies 418203N2 and 421645N2.*	1	1	1	1	1	1	1	1	1	1
38	3844	124D95	NUT—Rocker box cover to cylinder.....	8	8	8	8	8	8	8	8	8	8
38	3846	27D1	WASHER—Rocker box cover to cylinder....	8	8	8	8	8	8	8	8	8	8
38	3848	28D14	LOCKWASHER—Rocker box cover to cylinder.....	8	8	8	8	8	8	8	8	8	8
46	3850	65078	BOLT—Rocker arm hub.....	2	2	2	2	2	2	2	2	2	2
46	3852	2093D17	WASHER—Rocker arm hub bolt.....	4	4	4	4	4	4	4	4	4	4
46	3854	2083D57	RING—Rocker arm hub bolt oil seal packing	4	4	4	4	4	4	4	4	4	4
46	3856	65679	NUT—Rocker arm hub bolt.....	2	2	2	2	2	2	2	2	2	2
46	3857	59D5	COTTER PIN—Rocker arm hub bolt nut...	2	2	2	2	2	2	2	2	2	2
		69183	VALVE—Intake.....	1	1	1	1	1	1	1	1	1	1
		@ 68550	VALVE—Exhaust (early type)..... *Superseded by 114674.*	1	1	–	–	1	1	1	1	1	1
46	3858	114674	VALVE—Exhaust (late type).....	1	1	1	1	1	1	1	1	1	1
		@ 68503	SPRING—Valve, inner (early type)..... *Superseded by 112381N1.*	2	–	–	–	2	2	2	2	2	–
		@ 112381	SPRING—Valve, inner (intermediate type).. *Superseded by 112381N1.*	2	2	2	2	2	2	2	2	2	2
46	3860	112381N1	SPRING—Valve, inner (late type).....	2	2	2	2	2	2	2	2	2	2
		@ 68504	SPRING—Valve, intermediate (early type).. *Superseded by 112382N1.*	2	–	–	–	2	2	2	2	2	–
		@ 112382	SPRING—Valve, intermediate (intermediate type)..... *Superseded by 112382N1.*	2	2	2	2	2	2	2	2	2	2
46	3862	112382N1	SPRING—Valve, intermediate (late type)...	2	2	2	2	2	2	2	2	2	2
		@ 68505	SPRING—Valve, outer (early type)..... *Superseded by 68505N1.*	2	2	2	2	2	2	2	2	2	2
46	3864	68505N1	SPRING—Valve, outer (late type).....	2	2	2	2	2	2	2	2	2	2
		@ 69271	WASHER—Valve spring, upper (early type). *For replacement on Navy engines, use 118815 and on Army engines, use 113171.*	2	–	–	–	2	2	2	2	2	–
		113171	WASHER—Valve spring, upper (intermediate type)..... *113171 is no longer supplied for Navy engines. Superseded by 118815.*	2	2	2	2	2	2	2	2	2	2
		113171Y1	WASHER—Same as 113171 except .010 in. US ID..... *Superseded by 118815Y1.*	AR	AR	AR	AR	AR	AR	AR	AR	AR	AR
46	3866	118815	WASHER—Valve spring, upper (late type).. *Used for Navy engines.*	2	2	2	2	–	–	–	2	–	–
		118815Y1	WASHER—Same as 118815 except .010 in. US ID.....	AR	AR	AR	AR	–	–	–	AR	–	–
46	3868	63743	WASHER—Valve spring, intermediate, lower	2	2	2	2	2	2	2	2	2	2
46	3870	63744	WASHER—Valve spring, outer, lower.....	2	2	2	2	2	2	2	2	2	2
		69135	LOCK—Valve spring washer, intake, split... *69135 as supplied includes one half of lock. Two halves are required for each intake valve.*	2	2	2	2	2	2	2	2	2	2
46	3872	19965	LOCK—Valve spring washer, exhaust, split.. *19965 as supplied includes one half of lock. Two halves are required for each exhaust valve.*	2	2	2	2	2	2	2	2	2	2
38	3874	117234N3	COVER—Rocker box, intake..... *Quantities used:* *Six units are used for cylinders No. 2, 3, 4, 6, 7 and 8 on the following engines:* *-40* (31651 to 31674, 31676 to 31722, 45777 to 45876, 45879 to 45928, 45932 to 45934 and 152818 to 152820) *Seven units are used for cylinders No. 2, 3, 4, 5, 6, 7 and 8 on all -60 engines.* *Eight units are used for all cylinders except No. 6 on all -40B engines.*	#	8	9	7	9	9	9	9	9	9

Fig. No.	Index Number	Part Number	Nomenclature 1 2 3 4 5 6 7	Units Per Assy—Model R1820 -40	-40B	-54	-60	-65	-71	-73	-87	-95	-97
			Nine units are used on all -54, -65, -71, -73, -87, -95 and -97 engines and on the following engines: -40 (94528 to 94567, 152790 to 152799 and 152854 to 152943)										
			117234N3 includes a cowl strip.										
			117234N3 supersedes and is supplied for replacement of 111513 installed on some early engines.										
		112011	COVER—Rocker box, intake..... *Quantities used:* *One unit used for cylinder No. 6 on all -40B engines.* *Two units are used for cylinders No. 1 and 9 on all -60 engines.* *Three units are used for cylinders No. 1, 5 and 9 on the following engines:* -40 (31651 to 31674, 31676 to 31722, 45777 to 45876, 45879 to 45928, 45932 to 45934 and 152818 to 152820) *112011 does not have a cowl strip.*	#	1	–	2	–	–	–	–	–	–
38	3876	117235N3	COVER—Rocker box, exhaust..... *Quantities used:* *Six units are used for cylinders No. 3, 4, 5, 7, 8 and 9 on the following engines:* -40 (31651 to 31674, 31676 to 31722, 45777 to 45876, 45879 to 45928, 45932 to 45934 and 152818 to 152820) *Seven units are used for cylinders No. 3, 4, 5, 6, 7, 8 and 9 on all -60 engines.* *Eight units are used for all cylinders except No. 5 on all -40B engines.* *Nine units are used on all -54, -65, -71, -73, -87, -95 and -97 engines and on the following engines:* -40 (31651 to 31674, 31676 to 31722, 45777 to 45876, 45879 to 45928, 45932 to 45934 and 152818 to 152820) *117235N3 includes a cowl strip.* *117235N3 supersedes and is supplied for replacement of 111514 installed on some early engines.*	#	8	9	7	9	9	9	9	9	9
		112012	COVER—Rocker box, exhaust..... *Quantities used:* *One unit used for cylinder No. 5 on all -40B engines.* *Two units are used for cylinders No. 1 and 2 on all -60 engines.* *Three units are used for cylinders No. 1, 2 and 6 on the following engines:* -40 (31651 to 31674, 31676 to 31722, 45777 to 45876, 45879 to 45928, 45932 to 45934 and 152818 to 152820) *112012 does not have a cowl strip.*	#	1	–	2	–	–	–	–	–	–
		@ 69511	GASKET—Rocker box cover (early type)..... *Superseded by 117236.*	18	18	–	–	18	–	–	18	–	18
		@ 115304	GASKET—Rocker box cover (intermediate type) *Superseded by 117236.*	–	–	–	–	–	–	–	–	18	–
38	3878	117236	GASKET—Rocker box cover (late type).....	18	18	18	18	18	18	18	18	18	18
		@ 25520	RING—Cylinder oil seal (early type)..... *Superseded by 2083D45.*	9	–	–	–	–	–	–	–	9	–
38	3880	2083D45	RING—Cylinder oil seal (late type).....	9	9	9	9	9	9	9	9	9	9
		@ 2045D23	SCREW—Cylinder hold-down..... *Superseded by 2045D51.*	162	162	162	162	162	162	162	162	162	162
		2045S23	SCREW—Same as 2045D23 except .007 in. OS OD	AR	AR	AR	AR	AR	AR	AR	AR	AR	AR
		2045J23	SCREW—Same as 2045D23 except .012 in. OS OD	AR	AR	AR	AR	AR	AR	AR	AR	AR	AR

AVIALOGS
WWW.AVIALOGS.COM

Fig. No.	Index Number	Part Number	Nomenclature 1 2 3 4 5 6 7	Units Per Assy—Model R1820 -40	-40B	-54	-60	-65	-71	-73	-87	-95	-97
		2045D41	SCREW—Cylinder hold-down and fire extinguisher nozzle bracket..... *Factory installed on all engines except the following engines:* *-54* (86839 to 86866, 429167 to 429376 and 452267 to 452416)	18	18	–	18	18	18	18	18	18	18
		2045S41	SCREW—Same as 2045D41 except .007 in. OS OD	AR	AR	–	AR	AR	AR	AR	AR	AR	AR
		2045J41	SCREW—Same as 2045D41 except .012 in. OS OD	AR	AR	–	AR	AR	AR	AR	AR	AR	AR
38	3882	2045D51	SCREW—Cylinder hold-down and fire extinguisher nozzle bracket.....	162	162	180	162	162	162	162	162	162	162
38	3884	2093D14	WASHER—Cylinder hold-down screw.....	180	180	180	180	180	180	180	180	180	180
		@ 2D39	NUT—Exhaust pipe flange to cylinder..... *Factory installed on early engines.* *For replacement, make the following substitutions:* Use: *126323* — Description: *Nut — Exhaust pipe flange to cylinder* — Remove: *2D39* — Quant.: *36*; *Palnut — Exhaust pipe flange to cylinder nut* — *356-524* — *36*	36	36	–	36	36	36	36	36	36	36
38	3886	126323	NUT—Exhaust pipe flange to cylinder.....	36	36	36	36	36	36	36	36	36	36
		356-524	PALNUT—Exhaust pipe flange to cylinder nut (Wright Part No. 2000D2)..... *Used with nut 2D39.*	36	36	–	36	36	36	36	36	36	36
			INTAKE PIPES										
38	3900	68539	PIPE—Intake.....	9	9	9	9	9	9	9	9	9	9
38	3902	68537	FLANGE—Intake pipe.....	9	9	9	9	9	9	9	9	9	9
38	3904	68561	GASKET—Intake pipe flange.....	9	9	9	9	9	9	9	9	9	9
38	3906	68560	PACKING—Intake pipe flange.....	9	9	9	9	9	9	9	9	9	9
38	3908	45D1	BOLT—Intake pipe flange to cylinder.....	27	27	27	27	27	27	27	27	27	27
		189D59	LOCKWASHER—Intake pipe flange to cylinder.	27	27	27	27	27	27	27	27	27	27
38	3910	68335	PACKING—Intake pipe.....	9	9	9	9	9	9	9	9	9	9
38	3912	68336	NUT—Intake pipe packing.....	9	9	9	9	9	9	9	9	9	9
38	3914	416223	DEFLECTOR ASSEMBLY—Intake pipe..... *Factory installed on all -40B and -60 engines and on -54 engines 86728 to 86737.* *Used on intake pipes at cylinders No. 2 and 8.*	–	2	2	2	–	–	–	–	–	–
		* 114013	DEFLECTOR—Intake pipe.....	–	1	1	1	–	–	–	–	–	–
		* 114014	SEAL—Intake pipe deflector.....	–	1	1	1	–	–	–	–	–	–
		66D52	RIVET—Intake pipe deflector seal to deflector.....	–	3	3	3	–	–	–	–	–	–
			PISTONS										
		@ 413523	PISTON ASSEMBLY COMPLETE—With rings, piston pin and retaining springs..... *Factory installed on the following engines:* *-40* (31651 to 31668 and 31676 to 31709) *-95* (31812, 31814, 31818 and 31823) *Superseded by 423036.*	9	–	–	–	–	–		–	9	–
		@ 416008	PISTON ASSEMBLY COMPLETE—With rings, piston pin and retaining springs..... *Factory installed on the following engines:* *-40* (31669 to 31674 and 31710 to 31722) *Superseded by 423036.*	9	–	–	–	–	–	–	–	–	–

Fig. No.	Index Number	Part Number	Nomenclature 1 2 3 4 5 6 7	Units Per Assy—Model R1820 -40	-40B	-54	-60	-65	-71	-73	-87	-95	-97
		@ 416009	PISTON ASSEMBLY COMPLETE—With rings, piston pin and retaining springs..... *Factory installed on the following engines:* *-40* (45777 to 45876) *-95* (31732, 31733, 31741 to 31748, 31750, 31752 and 31805) *Superseded by 423036.*	9	-	-	-	-	-	-	-	9	-
		@ 420714	PISTON ASSEMBLY COMPLETE—With rings, ring expanders, ring spacer, piston pin and retaining springs..... *Factory installed on the following engines:* *-97* (72947 to 72966, 73027 to 73154, 81085 to 81104, 81340 to 81438, 81440 to 81444, 81446, 81448 to 81451, 81453 to 81462, 81464, 81465, 81467 to 81482, 81484, 81487, 81488, 81490 to 81493 and 81495 to 81497) *Superseded by 423036.*	-	-	-	-	-	-	-	-	-	9
		@ 416482	PISTON ASSEMBLY COMPLETE—With rings, piston pin and retaining springs..... *Factory installed on all -40B, -65, -71, -73, -87 and -95 engines and on the following engines:* *-40* (45879 to 45928, 45932 to 45934, 94528 to 94567, 152790 to 152799, 152818 to 152820 and 152854 to 152943) *-54* (86727 to 86793) *-60* (47468, 47469, 73229 to 73279, 73304 to 73429, 73432 to 73914, 80137 to 80279, 88168 to 88196, 155763 to 155817, 155824 to 155879, 156289 to 158093, 183147 to 183464, 425321 to 426720, 454477 to 455061 and 455070 to 455090) *-95* (80373 to 80376) *-97* (47467, 69425 to 72946, 72967 to 73026, 80787 to 81084, 81105 to 81339, 81439, 81445, 81447, 81452, 81463, 81466, 81483, 81485, 81486, 81489, 81494, 81498 to 81536, 81581 to 82306 and 190066 to 190249) *Superseded by 423036.*	9	9	9	9	9	9	9	9	9	9
		@ 421075	PISTON ASSEMBLY COMPLETE—With rings, ring expanders, ring spacers, piston pin and retaining springs..... *Factory installed on the following engines:* *-97* (81537 to 81552 and 190250 to 190522) *Superseded by 423036.*	-	-	-	-	-	-	-	-	-	9
		423036	PISTON ASSEMBLY COMPLETE—With rings, piston pin and retaining springs..... *Factory installed on the following engines:* *-54* (86794 to 86866, 429167 to 429376 and 452267 to 452378) *-60* (455062 to 455069 and 455091 to 455407)	9	9	9	9	9	9	9	9	9	9
		@ 110655	PISTON..... *Part of assemblies 413523 and 416008.* *Superseded by 112890.*	1	-	-	-	-	-	-	-	1	-
38	3950	112890	PISTON..... *Part of assemblies 416009, 416482, 420714, 421075 and 423036.* *Read note under cylinder assemblies 890118 and 890728.*	1	1	1	1	1	1	1	1	1	1
		112890Y1	PISTON—Same as 112890 except .015 in. OS OD.....	AR	AR	AR	AR	AR	AR	AR	AR	AR	AR
		@ 110633	RING—Piston compression (grooves No. 1, 2 and 3..... *Part of assembly 413523.* *110633 and its oversizes are no longer supplied. For replacement in groove No. 1, use 120952 and its oversizes. For replacement in*	3	-	-	-	-	-	-	-	3	-

AVIATIONCATALOGS
WWW.AVIATIONCATALOGS.COM

Fig. No.	Index Number	Part Number	Nomenclature 1 2 3 4 5 6 7	Units Per Assy—Model R1820 -40	-40B	-54	-60	-65	-71	-73	-87	-95	-97
			grooves No. 2 and 3, use 114041 and its oversizes.										
		@ 114086	RING—Piston compression (grooves No. 1, 2 and 3)..... *Part of assemblies 416008 and 416009. 114086 and its oversizes are no longer supplied. For replacement in groove No. 1 use 120952 and its oversizes. For replacement in grooves No. 2 and 3 use 114041 and its oversizes.*	3	–	–	–	–	–	–	–	3	–
		@ 118743	RING—Piston compression (groove No. 1).. *Part of assembly 420714.*	–	–	–	–	–	–	–	–	–	1
			118743 and its oversizes are no longer supplied. For replacement use 120952 and its oversizes.										
38	3952	120952	RING—Piston compression (groove No. 1).. *Part of assemblies 421075 and 423036.*	1	1	1	1	1	1	1	1	1	1
		120952Y1	RING—Same as 120952 except .002 in. OS width, standard OD.....	AR	AR	AR	AR	AR	AR	AR	AR	AR	AR
		120952Y2	RING—Same as 120952 except .004 in. OS width, standard OD.....	AR	AR	AR	AR	AR	AR	AR	AR	AR	AR
		120952Y3	RING—Same as 120952 except .006 in. OS width, standard OD.....	AR	AR	AR	AR	AR	AR	AR	AR	AR	AR
		120952Y4	RING—Same as 120952 except .008 in. OS width, standard OD.....	AR	AR	AR	AR	AR	AR	AR	AR	AR	AR
		120952Y5	RING—Same as 120952 except .010 in. OS width, standard OD.....	AR	AR	AR	AR	AR	AR	AR	AR	AR	AR
		120952Y15	RING—Same as 120952 except standard width, .015 in. OS OD.....	AR	AR	AR	AR	AR	AR	AR	AR	AR	AR
		120952Y16	RING—Same as 120952 except .002 in. OS width, .015 in. OS OD.....	AR	AR	AR	AR	AR	AR	AR	AR	AR	AR
		120952Y17	RING—Same as 120952 except .004 in. OS width, .015 in. OS OD.....	AR	AR	AR	AR	AR	AR	AR	AR	AR	AR
		120952Y18	RING—Same as 120952 except .006 in. OS width, .015 in. OS OD.....	AR	AR	AR	AR	AR	AR	AR	AR	AR	AR
		120952Y19	RING—Same as 120952 except .008 in. OS width, .015 in. OS OD.....	AR	AR	AR	AR	AR	AR	AR	AR	AR	AR
		120952Y20	RING—Same as 120952 except .010 in. OS width, .015 in. OS OD.....	AR	AR	AR	AR	AR	AR	AR	AR	AR	AR
		@ 120078	RING—Piston compression (grooves No. 2 and 3) (with double taper edge). .... *Part of assemblies 420714 and 421075.*	–	–	–	–	–	–	–	–	–	2
			120078 and its oversizes are no longer supplied. For replacement use 114041 and its oversizes.										
38	3953	114041	RING—Piston compression (without double taper edge)..... *Installed in grooves No. 1, 2 and 3 of assembly 416482 and grooves No. 2 and 3 of assembly 423036.*	2	2	2	2	2	2	2	2	2	2
			114041 is no longer supplied for groove No. 1. For replacement, use 120952.										
		114041Y1	RING—Same as 114041 except .002 in. OS width, standard OD.....	AR	AR	AR	AR	AR	AR	AR	AR	AR	AR
		114041Y2	RING—Same as 114041 except .004 in. OS width, standard OD.....	AR	AR	AR	AR	AR	AR	AR	AR	AR	AR
		114041Y3	RING—Same as 114041 except .006 in. OS width, standard OD.....	AR	AR	AR	AR	AR	AR	AR	AR	AR	AR
		114041Y4	RING—Same as 114041 except .008 in. OS width, standard OD.....	AR	AR	AR	AR	AR	AR	AR	AR	AR	AR
		114041Y5	RING—Same as 114041 except .010 in. OS width, standard OD.....	AR	AR	AR	AR	AR	AR	AR	AR	AR	AR
		114041Y15	RING—Same as 114041 except standard width, .015 in. OS OD.....	AR	AR	AR	AR	AR	AR	AR	AR	AR	AR
		114041Y16	RING—Same as 114041 except .002 in. OS width, .015 in. OS OD.....	AR	AR	AR	AR	AR	AR	AR	AR	AR	AR
		114041Y17	RING—Same as 114041 except .004 in. OS width, .015 in. OS OD.....	AR	AR	AR	AR	AR	AR	AR	AR	AR	AR

Fig. No.	Index Number	Part Number	Nomenclature 1 2 3 4 5 6 7	Units Per Assy—Model R1820 -40	-40B	-54	-60	-65	-71	-73	-87	-95	-97
		114041Y18	RING—Same as 114041 except .006 in. OS width, .015 in. OS OD	AR	AR	AR	AR	AR	AR	AR	AR	AR	AR
		114041Y19	RING—Same as 114041 except .008 in. OS width, .015 in. OS OD	AR	AR	AR	AR	AR	AR	AR	AR	AR	AR
		114041Y20	RING—Same as 114041 except .010 in. OS width, .015 in. OS OD	AR	AR	AR	AR	AR	AR	AR	AR	AR	AR
38	3954	68498	RING—Piston compression *Quantities used:* *With assembly 413523—three units (grooves No. 4, 5 and 6); with assembly 416008—three units (grooves No. 4, 5 and 6); with assembly 416009—three units (grooves No. 4, 5 and 6); with assembly 416482—three units (grooves No. 4, 5 and 6); with assembly 423036—three units (grooves No. 4, 5 and 6); with assembly 421075—two units (grooves No. 5 and 6); with assembly 420714—one unit (groove No. 6).*	#	#	#	#	#	#	#	#	#	#
		68498Y1	RING—Same as 68498 except .002 in. OS width, standard OD	AR	AR	AR	AR	AR	AR	AR	AR	AR	AR
		68498Y2	RING—Same as 68498 except .004 in. OS width, standard OD	AR	AR	AR	AR	AR	AR	AR	AR	AR	AR
		68498Y3	RING—Same as 68498 except .006 in. OS width, standard OD	AR	AR	AR	AR	AR	AR	AR	AR	AR	AR
		68498Y4	RING—Same as 68498 except .008 in. OS width, standard OD	AR	AR	AR	AR	AR	AR	AR	AR	AR	AR
		68498Y5	RING—Same as 68498 except .010 in. OS width, standard OD	AR	AR	AR	AR	AR	AR	AR	AR	AR	AR
		68498Y6	RING—Same as 68498 except .002 in. US width, standard OD	AR	AR	AR	AR	AR	AR	AR	AR	AR	AR
		68498Y7	RING—Same as 68498 except .004 in. US width, standard OD	AR	AR	AR	AR	AR	AR	AR	AR	AR	AR
		68498Y8	RING—Same as 68498 except .006 in. US width, standard OD	AR	AR	AR	AR	AR	AR	AR	AR	AR	AR
		68498Y15	RING—Same as 68498 except standard width, .015 in. OS OD	AR	AR	AR	AR	AR	AR	AR	AR	AR	AR
		68498Y16	RING—Same as 68498 except .002 in. OS width, .015 in. OS OD	AR	AR	AR	AR	AR	AR	AR	AR	AR	AR
		68498Y17	RING—Same as 68498 except .004 in. OS width, .015 in. OS OD	AR	AR	AR	AR	AR	AR	AR	AR	AR	AR
		68498Y18	RING—Same as 68498 except .006 in. OS width, .015 in. OS OD	AR	AR	AR	AR	AR	AR	AR	AR	AR	AR
		68498Y19	RING—Same as 68498 except .008 in. OS width, .015 in. OS OD	AR	AR	AR	AR	AR	AR	AR	AR	AR	AR
		68498Y20	RING—Same as 68498 except .010 in. OS width, .015 in. OS OD	AR	AR	AR	AR	AR	AR	AR	AR	AR	AR
		68498Y21	RING—Same as 68498 except .002 in. US width, .015 in. OS OD	AR	AR	AR	AR	AR	AR	AR	AR	AR	AR
		68498Y22	RING—Same as 68498 except .004 in. US width, .015 in. OS OD	AR	AR	AR	AR	AR	AR	AR	AR	AR	AR
		68498Y23	RING—Same as 68498 except .006 in. US width, .015 in. OS OD	AR	AR	AR	AR	AR	AR	AR	AR	AR	AR
		@ 118483	SPACER—Piston ring *Quantities used:* *With assembly 420714—two units (grooves No. 4 and 5); with assembly 421075—one unit (groove No. 4).* *For replacement use 68498 and remove 118481 and 118987.*	-	-	-	-	-	-	-	-	-	#
		@ 118986	EXPANDER—Piston ring (grooves No. 4 and 5) *Part of assembly 420714.* *For replacement use 68498 and remove 118483 and 118987.*	-	-	-	-	-	-	-	-	-	4
		@ 118481	EXPANDER—Piston ring (groove No. 4) *Part of assembly 421075.* *For replacement use 68498 and remove 118483 and 118987.*	-	-	-	-	-	-	-	-	-	2

Fig. No.	Index Number	Part Number	Nomenclature 1 2 3 4 5 6 7	Units Per Assy—Model R1820 -40	-40B	-54	-60	-65	-71	-73	-87	-95	-97
		@ 118987	RING—Piston oil control ring..... *Part of assemblies 420714 and 421075. Quantities used: With assembly 420714—six units (grooves No. 4 and 5); with assembly 421075—three units (groove No. 4). For replacement use 68498 and remove 118481 and 118483.*	–	–	–	–	–	–	–	–	–	#
38	3956	68827	PIN—Piston.....	1	1	1	1	1	1	1	1	1	1
38	3958	110219	SPRING—Piston pin retaining.....	2	2	2	2	2	2	2	2	2	2

AVIALOGS
WWW.AVIALOGS.COM

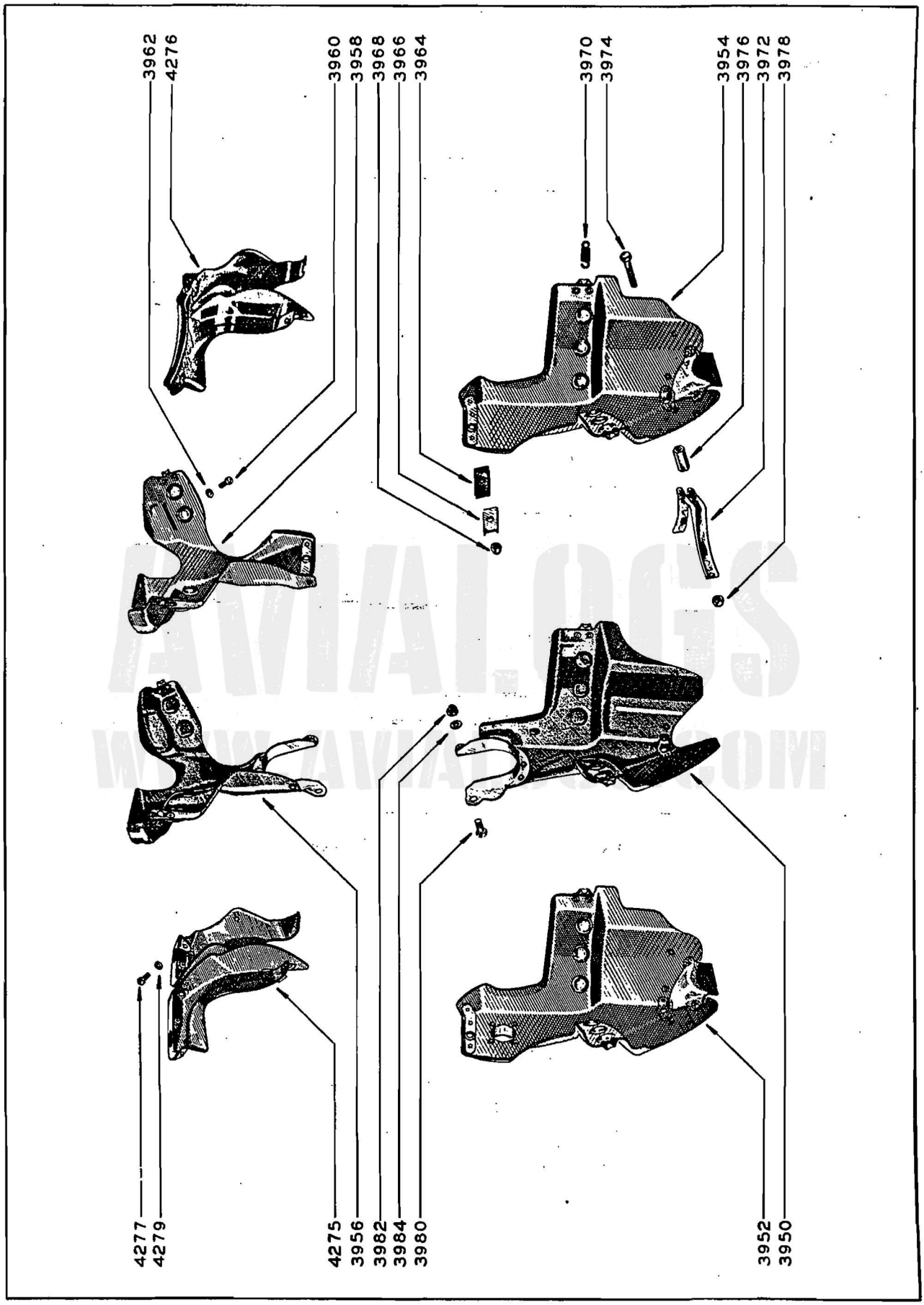

Numbers shown are index numbers and are numerically arranged in the Group Assembly Parts List

Figure 39—Inter-Cylinder and Cylinder Head Air Deflectors (R1820-40)

INTER-CYLINDER AIR DEFLECTORS (-40)

Fig. No.	Index Number	Part Number	Nomenclature 1 2 3 4 5 6 7	Per Engine A	B	C	Quantity Used Per Assembly 4117310N1	4115921N3	4115921N1	4117309N1	4115922N1	4118094N2	4118094N3	4118094N1	4118202N1	4117310N1	4115921N3	4115921N1	4117309N1	4115922N1
			Except where otherwise noted all of the parts listed in this group are used on all engines.																	
		@ 418094N2	DEFLECTOR ASSEMBLY—Cylinder air (plastic) (between cylinders No. 1–2, 6–7 and 9–1)..... *Superseded by 415921N1.*	–	–	3														
		418094N3	DEFLECTOR ASSEMBLY—Cylinder air (plastic) (between cylinders No. 2–3 and 8–9).....	–	–	2														
		@ 418094N1	DEFLECTOR ASSEMBLY—Cylinder air (plastic) (between cylinders No. 3–4, 4–5 and 7–8)..... *Superseded by 415921N1.*	–	–	3														
		@ 418202N1	DEFLECTOR ASSEMBLY—Cylinder air (plastic) (between cylinders No. 5–6)..... *Superseded by 415922N1.*	–	–	1														
39	3950	417310N1	DEFLECTOR ASSEMBLY—Cylinder air (metal) (between cylinders No. 1–2 and 9–1)..... *417310N1 supersedes and is supplied for replacement of 412621.*	2	–	–										2				
39	3952	415921N3	DEFLECTOR ASSEMBLY—Cylinder air (metal) (between cylinders No. 2–3 and 8–9)..... *415921N3 supersedes and is supplied for replacement of 412606.*	2	2	–											2			
39	3954	415921N1	DEFLECTOR ASSEMBLY—Cylinder air (metal)..... *415921N1 is used between cylinders No. 3–4, 4–5, 6–7 and 7–8 on A engines; between cylinders No. 1–2, 3–4, 4–5, 6–7, 7–8 and 9–1 on B and C engines.* *415921N1 supersedes and is supplied for replacement of 412607, 412608 and 415921N2.*	4	6	6												4		
39	3956	417309N1	DEFLECTOR ASSEMBLY—Cylinder air (metal) (between cylinders No. 5–6)..... *417309N1 supersedes and is supplied for replacement of 412837.*	1	–	–													1	
39	3958	415922N1	DEFLECTOR ASSEMBLY—Cylinder air (metal) (between cylinders No. 5–6).....	–	1	1														1
		415201	PLATE AND BOLT ASSEMBLY—Cylinder air deflector upper clamp.....	6	9	9	–	1	1	–	1	1	1	1	1	1	1	1	–	–

A Used for engines 31651 to 31674, 31676 to 31722, 45777 to 45876, 45879 to 45928, 45932 to 45934 and 152818 to 152820.
B Used for engines 94528 to 94552, 152790 to 152799 and 152854 to 152913.
C Used for engines 94553 to 94567 and 152914 to 152943.

(-40)

Fig. No.	Index Number	Part Number	Nomenclature	Per Engine A	Per Engine B	Per Engine C	Quantity Used Per Assembly 4117310N1	4115920N3	4115910N1	4117309N1	4115922N1	4118029044N2	4118029044N3	4118029044N1	4118022021N1	4122606	4122607	4122608	4122621	4122837	4115921N2
		* 112814	PLATE—Cylinder air deflector upper clamp	6	9	9	–	1	1	–	1	1	1	1	1	1	1	1	–	–	1
		* 2070D29	BOLT—Cylinder air deflector upper clamp plate	6	9	9	–	1	1	–	1	1	1	1	1	1	1	1	–	–	1
		27D130	WASHER—Cylinder air deflector upper clamp plate to deflector	18	27	27	–	3	3	–	3	–	–	–	–	3	3	3	–	–	3
		66D19	RIVET—Cylinder air deflector upper clamp plate to deflector (.125 in. x .250 in.)	18	27	27	–	3	3	–	3	–	–	–	–	3	3	3	–	–	3
		66D61	RIVET—Cylinder air deflector upper clamp plate to deflector (.125 in. x .281 in.)	–	–	27	–	–	–	–	–	3	3	3	3	–	–	–	–	–	–
		420699	CLAMP ASSEMBLY—Cylinder air deflector air blast tube. *420699 supersedes and is supplied for replacement of 65923.*	2	2	2	–	1	–	–	–	–	1	–	–	1	–	–	–	–	–
		* 65923	CLAMP—Cylinder air deflector air blast tube	2	2	2	–	1	–	–	–	–	1	–	–	1	–	–	–	–	–
		* 118422	LUG—Cylinder air deflector air blast tube clamp	2	2	2	–	1	–	–	–	–	1	–	–	1	–	–	–	–	–
		127322	RING—Cylinder air deflector air blast tube hole reinforcing	–	–	2	–	–	–	–	–	–	1	–	–	–	–	–	–	–	–
		65924	PLUG—Cylinder air deflector air blast tube clamp	2	2	2	–	1	–	–	–	–	1	–	–	1	–	–	–	–	–
		3D10	BOLT—Cylinder air deflector air blast tube clamp	2	2	2	–	1	–	–	–	–	1	–	–	1	–	–	–	–	–
		34D51	WASHER—Cylinder air deflector air blast tube clamp	2	2	2	–	1	–	–	–	–	1	–	–	1	–	–	–	–	–
		2D1	NUT—Cylinder air deflector air blast tube clamp	2	2	2	–	1	–	–	–	–	1	–	–	1	–	–	–	–	–
		356-428	PALNUT—Cylinder air deflector air blast tube clamp nut (Wright Part No. 2000D1)	2	2	2	–	1	–	–	–	–	1	–	–	1	–	–	–	–	–
		27D130	WASHER—Cylinder air deflector air blast tube clamp to deflector	8	8	–	–	4	–	–	–	–	–	–	–	4	–	–	–	–	–
		66D19	RIVET—Cylinder air deflector air blast tube clamp to deflector (.125 in. x .250 in.)	8	8	–	–	4	–	–	–	–	–	–	–	4	–	–	–	–	–
		66D25	RIVET—Cylinder air deflector air blast tube clamp to deflector (.125 in. x .313 in.)	–	–	4	–	–	–	–	–	–	4	–	–	–	–	–	–	–	–
		* 115307	DEFLECTOR—Cylinder air	2	–	–	1	–	–	–	–	–	–	–	–	–	–	–	–	–	–
		* 113622	DEFLECTOR—Cylinder air	6	8	6	–	1	1	–	–	–	–	–	–	–	–	–	–	–	1
		* 115300	DEFLECTOR—Cylinder air	1	–	–	–	–	–	1	–	–	–	–	–	–	–	–	–	–	–
		* 113621	DEFLECTOR—Cylinder air	–	1	–	–	–	–	–	1	–	–	–	–	–	–	–	–	–	–
		* 116743N2	DEFLECTOR—Cylinder air	–	–	3	–	–	–	–	–	1	–	–	–	–	–	–	–	–	–
		* 116743N3	DEFLECTOR—Cylinder air	–	–	2	–	–	–	–	–	–	1	–	–	–	–	–	–	–	–
		* 116743N1	DEFLECTOR—Cylinder air	–	–	3	–	–	–	–	–	–	–	1	–	–	–	–	–	–	–
		* 116756N1	DEFLECTOR—Cylinder air	–	–	1	–	–	–	–	–	–	–	–	1	–	–	–	–	–	–
		* 69477	DEFLECTOR—Cylinder air	6	–	–	–	–	–	–	–	–	–	–	–	1	1	1	–	–	–
		* 69484	DEFLECTOR—Cylinder air	2	–	–	–	–	–	–	–	–	–	–	–	–	–	–	1	–	–
		* 69696	DEFLECTOR—Cylinder air	1	–	–	–	–	–	–	–	–	–	–	–	–	–	–	–	1	–
		116472	PLATE—Cylinder air deflector clamp spring. *116472 supersedes and is supplied for replacement of 113510.*	18	18	18	2	2	2	2	2	2	2	2	2	2	2	2	2	2	2
		27D130	WASHER—Cylinder air deflector clamp spring plate to deflector	36	36	36	4	4	4	4	4	–	–	–	–	4	4	4	4	4	4

A Used for engines 31651 to 31674, 31676 to 31722, 45777 to 45876, 45879 to 45928, 45932 to 45934 and 152818 to 152820.
B Used for engines 94528 to 94552, 152790 to 152799 and 152854 to 152913.
C Used for engines 94553 to 94567 and 152914 to 152943.

(-40)

Fig. No.	Index Number	Part Number	Nomenclature	Per Engine A	B	C	Quantity Used Per Assembly 41731N1	41159N1	41159N3	41173N1	41203N1	41159N2	41180N2	41180N3	41180N1	41202N1	41226N1	41226N2	41226N3	41226N4	41283N1	41283N2
		66D19	RIVET—Cylinder air deflector clamp spring plate to deflector (.125 in. x .250 in.) *66D19 supersedes 66D25 at this location.*	36	36	36	4	4	4	4	4	–	–	–	–	4	4	4	4	4	4
		66D61	RIVET—Cylinder air deflector clamp spring plate to deflector (.125 in. x .281 in.)	–	–	36	–	–	–	–	–	4	4	4	4	–	–	–	–	–	–
		69524	STRAP—Cylinder air deflector buffer (7.50 in. long)	16	–	–	–	–	–	–	–	–	–	–	–	2	2	2	2	–	–
		69545	STRAP—Cylinder air deflector buffer (14.50 in. long)	1	–	–	–	–	–	–	–	–	–	–	–	–	–	–	–	1	–
		27D130	WASHER—Cylinder air deflector buffer strap to deflector	34	–	–	–	–	–	–	–	–	–	–	–	4	4	4	4	2	–
		AN515-6-8	SCREW—Cylinder air deflector buffer strap to deflector (Wright Part No. 15D5)	34	–	–	–	–	–	–	–	–	–	–	–	4	4	4	4	2	–
		27D183	WASHER—Cylinder air deflector buffer strap to deflector (at nut end)	34	–	–	–	–	–	–	–	–	–	–	–	4	4	4	4	2	–
		2087D1	NUT—Cylinder air deflector buffer strap to deflector	34	–	–	–	–	–	–	–	–	–	–	–	4	4	4	4	2	–
		112883	BUTTON—Cylinder air deflector buffer	52	52	52	6	6	6	4	4	6	6	6	4	–	–	–	–	–	6
		113394	GROMMET AND PAD—Cylinder air deflector cylinder barrel	–	–	9	–	–	–	–	–	1	1	1	1	–	–	–	–	–	–
		68837	CLAMP—Cylinder air deflector lower	8	8	8	1	1	1	–	–	1	1	1	–	1	1	1	1	–	1
		68840	PLATE—Cylinder air deflector lower clamp	8	8	8	1	1	1	–	–	1	1	1	–	1	1	1	1	–	1
		127549	SPACER—Cylinder air deflector lower clamp and plate	–	–	8	–	–	–	–	–	1	1	1	–	–	–	–	–	–	–
		27D130	WASHER—Cylinder air deflector lower clamp to deflector	32	32	32	4	4	4	–	–	–	–	–	–	4	4	4	4	–	4
		66D19	RIVET—Cylinder air deflector lower clamp to deflector (.125 in. x .250 in.)	32	32	32	4	4	4	–	–	–	–	–	–	4	4	4	4	–	4
		66D60	RIVET—Cylinder air deflector lower clamp to deflector (.125 in. x .218 in.)	–	–	32	–	–	–	–	–	4	4	4	–	–	–	–	–	–	–
		66D56	RIVET—Cylinder air deflector lower clamp and plate to deflector (.125 in. x .280 in.)	16	16	12	2	2	2	–	–	–	–	–	–	2	2	2	2	–	2
		66D25	RIVET—Cylinder air deflector lower clamp and plate to deflector (.125 in. x .313 in.)	–	–	16	–	–	–	–	–	2	2	2	–	–	–	–	–	–	–
		69525	COVER—Cylinder air deflector magneto conduit substituting	6	8	5	–	1	1	–	–	–	1	1	–	1	1	–	–	–	–
		27D130	WASHER—Cylinder air deflector magneto conduit substituting cover to deflector	18	24	15	–	3	3	–	–	–	3	3	–	3	3	–	–	–	–
		AN515-6-8	SCREW—Cylinder air deflector magneto conduit substituting cover to deflector (Wright Part No. 15D5)	18	24	15	–	3	3	–	–	–	3	3	–	3	3	–	–	–	–
		2087D1	NUT—Cylinder air deflector magneto conduit substituting cover to deflector	18	24	15	–	3	3	–	–	–	3	3	–	3	3	–	–	–	–
		69485	BRACE—Cylinder air deflector	3	–	–	1	–	–	1	–	–	–	–	–	–	–	–	1	1	–
		27D130	WASHER—Cylinder air deflector brace to deflector	12	–	–	4	–	–	4	–	–	–	–	–	–	–	–	4	4	–
		66D19	RIVET—Cylinder air deflector brace to deflector	12	–	–	4	–	–	4	–	–	–	–	–	–	–	–	4	4	–

A Used for engines 31651 to 31674, 31676 to 31722, 45777 to 45876, 45879 to 45928, 45932 to 45934 and 152818 to 152820.
B Used for engines 94528 to 94552, 152790 to 152799 and 152854 to 152913.
C Used for engines 94553 to 94567 and 152914 to 152943.

(-40)

Fig. No.	Index Number	Part Number	Nomenclature 1 2 3 4 5 6 7	Per Engine A	Per Engine B	Per Engine C	417310N1	415921N3	415921N1	417309N1	415922N1	418094N2	418094N3	418094N1	418202N1	412606	412607	412608	412621	412837	415921N2
			CYLINDER AIR DEFLECTOR ATTACHING PARTS																		
39	3960	90D13	SCREW--Cylinder air deflector to oil sump	2	2	2															
39	3962	27D111	WASHER—Cylinder air deflector to oil sump *27D111 supersedes and is supplied for replacement of 27D4 installed on early engines.*	2	2	2															
39	3964	68839	GROMMET—Cylinder air deflector upper clamp	9	9	9															
39	3966	68842	PLATE—Cylinder air deflector upper clamp grommet	9	9	9															
39	3968	4040D5	NUT—Cylinder air deflector upper grommet and clamp plate *4040D5 supersedes and is supplied for replacement of 2087D5 installed on early engines.*	9	9	9															
39	3970	113509	SPRING—Cylinder air deflector upper clamp plate	9	9	9															
39	3972	68838	CLAMP—Cylinder air deflector lower, front	8	8	8															
39	3974	45D29	BOLT—Cylinder air deflector lower clamp (2.25 in. long)	8	8	8															
39	3976	68884	SPACER—Cylinder air deflector lower clamp	8	8	8															
39	3978	4040D5	NUT—Cylinder air deflector lower clamp *4040D5 supersedes 2087D5.*	8	8	8															
39	3980	3D9	BOLT—Cylinder air deflector to rocker box cover *Except engines 152818 to 152820.*	6	-	-															
39	3982	2087D3	NUT—Cylinder air deflector to rocker box cover *Used with bolt 3D9.*	6	-	-															
39	3984	34D51	WASHER—Cylinder air deflector to rocker box cover (.266 in. x .50 in. x .047 in.) *Used with bolt 3D9.*	6	-	-															

A Used for engines 31651 to 31674, 31676 to 31722, 45777 to 45876, 45879 to 45928, 45932 to 45934 and 152818 to 152820.
B Used for engines 94528 to 94552, 152799 to 152799 and 152854 to 152913.
C Used for engines 94553 to 94567 and 152914 to 152943.

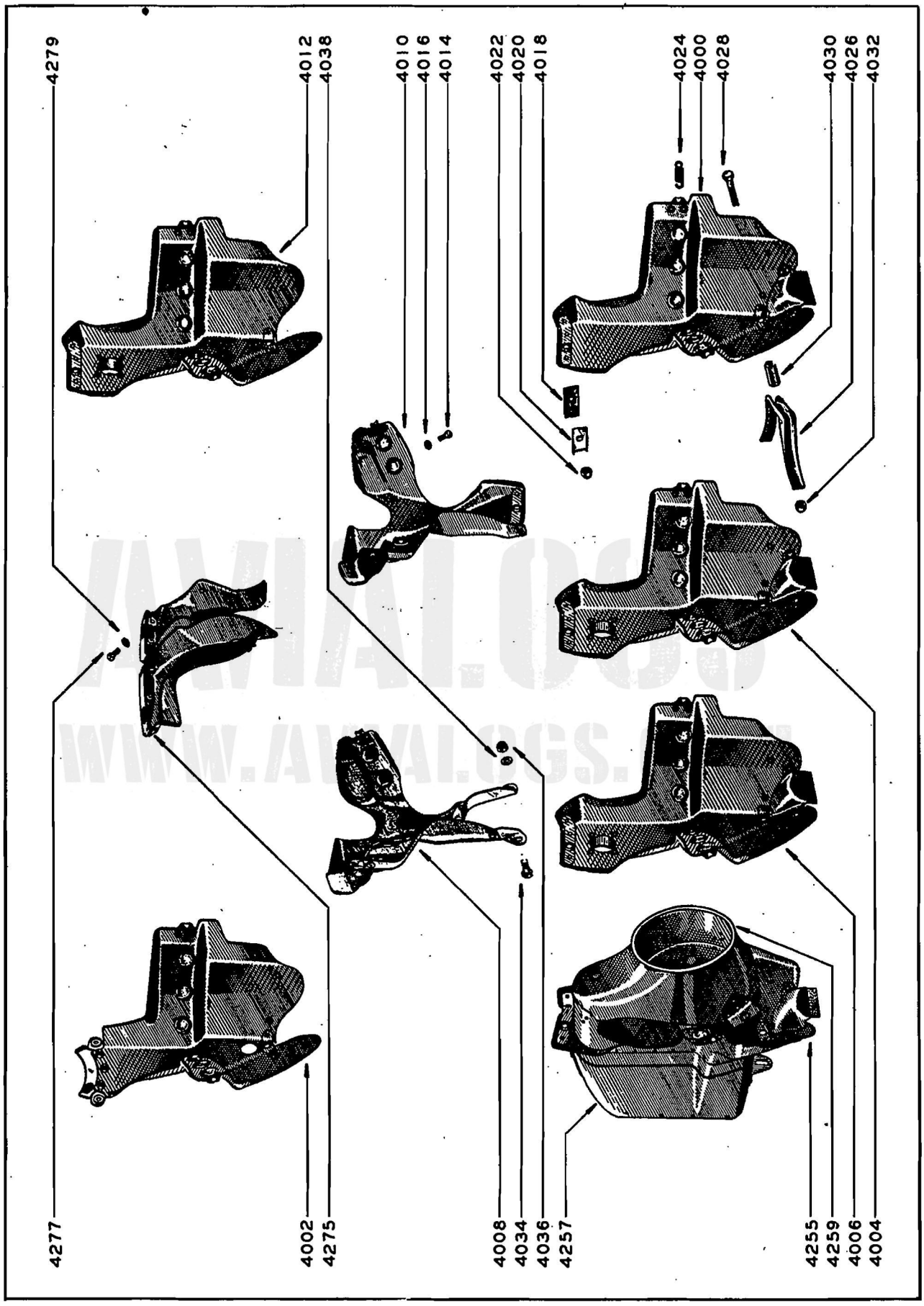

Numbers shown are index numbers and are numerically arranged in the Group Assembly Parts List

Figure 40—Inter-Cylinder and Cylinder Head Air Deflectors (R1820-40B and -60)

INTER-CYLINDER AIR DEFLECTORS (-40B AND -60) FOR ALL CYLINDERS EXCEPT BETWEEN CYLINDERS NO. 2-3 AND 8-9)

Fig. No.	Index Number	Part Number	Nomenclature 1 2 3 4 5 6 7	Quantity Used: Per Engine -40B	Quantity Used: Per Engine -60	Per Assembly: 415921N1	415921N8	418094N16	415921N3	415921N7	418094N15	418094N3	417309N1	415922N1	418202N1	415921N9	418094N17	418094N2	415921N2	415921N6
			Except where otherwise noted all of the parts listed in this group are used on all engines.																	
40	4000	415921N1	DEFLECTOR ASSEMBLY—Cylinder air (metal) (between cylinders No. 1-2, 4-5, 6-7 and 9-1)	4	-															
40	4002	415921N8	DEFLECTOR ASSEMBLY—Cylinder air (metal) (between cylinders No. 1-2 and 9-1) *Used on the following engines:* (47468, 47469, 73229 to 73279, 73304 to 73429, 73432 to 73500, 80227 to 80236, 80242 to 80279, 88168 to 88196, 155763 to 155803, 155824 to 155879, 156289 to 156986, 157155 to 157186, 426121 to 426206, 426347, 426451 to 426620, 454699 to 454781, 454819 to 454844 and 454862 to 455407)	-	2															
		@ 418094N16	DEFLECTOR ASSEMBLY—Cylinder air (plastic) (between cylinders No. 1-2 and 9-1) *Used on the following engines:* (73501 to 73914, 80137 to 80226, 80237 to 80241, 155804 to 155817, 156987 to 157154, 157187 to 158093, 183147 to 183464, 425321 to 426120, 426207 to 426346, 426348 to 426450, 426621 to 426720, 454477 to 454698, 454782 to 454818 and 454845 to 454861) *Superseded by 415921N8.*	-	2															
40	4004	415921N3	DEFLECTOR ASSEMBLY—Cylinder air (metal) (between cylinders No. 3-4 and 7-8)	2	-															
40	4006	415921N7	DEFLECTOR ASSEMBLY—Cylinder air (metal) (between cylinders No. 3-4) *Used on the following engines:* (47468, 47469, 73229 to 73279, 73304 to 73429, 73432 to 73500, 80227 to 80236, 80242 to 80279, 88168 to 88196, 155763 to 155803, 155824 to 155879, 156289 to 156986, 157155 to 157186, 426121 to 426206, 426347, 426451 to 426620, 454699 to 454781, 454819 to 454844 and 454862 to 455407)	-	1															
		@ 418094N15	DEFLECTOR ASSEMBLY—Cylinder air (plastic) (between cylinders No. 3-4) *Used on the following engines:* (73501 to 73914, 80137 to 80226, 80237 to 80241, 155804 to 155817, 156987 to 157154, 157187 to 158093, 183147 to 183464, 425321 to 426120, 426207 to 426346, 426348 to 426450, 426621 to 426720, 454477 to 454698, 454782 to 454818 and 454845 to 454861) *Superseded by 415921N7.*	-	1															

(-40B AND -60)

Fig. No.	Index Number	Part Number	Nomenclature 1 2 3 4 5 6 7	Per Engine -40B	Per Engine -60	Quantity Used Per Assembly 415921N1	415921N8	418094N16	415921N3	415921N7	418094N15	418094N3	417309N1	415922N1	418202N1	415921N9	418094N17	418094N2	415921N2	415921N6
		415921N3	DEFLECTOR ASSEMBLY—Cylinder air (metal) (between cylinders No. 4-5)..... *Used on the following engines:* (47468, 47469, 73229 to 73279, 73304 to 73429, 73432 to 73500, 80227 to 80236, 80242 to 80279, 88168 to 88196, 155763 to 155803, 155824 to 155879, 156289 to 156986, 157155 to 157186, 426121 to 426206, 426347, 426451 to 426620, 454699 to 454781, 454819 to 454844 and 454862 to 455407)	-	1															
		418094N3	DEFLECTOR ASSEMBLY—Cylinder air (plastic) (between cylinders No. 4-5)..... *Used on the following engines:* (73501 to 73914, 80137 to 80226, 80237 to 80241, 155804 to 155817, 156987 to 157154, 157187 to 158093, 183147 to 183464, 425321 to 426120, 426207 to 426346, 426348 to 426450, 426621 to 426720, 454477 to 454698, 454782 to 454818 and 454845 to 454861)	-	1															
40	4008	417309N1	DEFLECTOR ASSEMBLY—Cylinder air (metal) (between cylinders No. 5-6).....	1	-															
40	4010	415922N1	DEFLECTOR ASSEMBLY—Cylinder air (metal) (between cylinders No. 5-6)..... *Used on the following engines:* (47468, 47469, 73229 to 73279, 73304 to 73429, 73432 to 73500, 73785 to 73790, 73821 to 73914, 88168 to 88196, 155763 to 155803, 155824 to 155879, 156289 to 156986, 157155 to 157186, 425543 to 425572, 425886 to 426213, 426215 to 426225, 426228 to 426235, 426237, 426240, 426241, 426246, 426276 to 426284, 426286, 426288, 426298, 426301 to 426363, 426451 to 426620 and 454477 to 455407)	-	1															
		@ 418202N1	DEFLECTOR ASSEMBLY—Cylinder air (plastic) (between cylinders No. 5-6)..... *Used on the following engines:* (73501 to 73784, 73791 to 73820, 155804 to 155817, 156987 to 157154, 157187 to 158093, 183147 to 183464, 425321 to 425542, 425573 to 425885, 426214, 426226, 426227, 426236, 426238, 426239, 426242 to 426245, 426247 to 426275, 426285, 426287, 426289 to 426297, 426299, 426300, 426364 to 426450 and 426621 to 426720) *Superseded by 415922N1.*	-	1															

(-40B AND -60)

Fig. No.	Index Number	Part Number	Nomenclature 1 2 3 4 5 6 7	Per Engine -40B	Per Engine -60	Quantity Used Per Assembly 4115921N1	4115921N8	4118094N16	4115921N3	4115921N7	4118094N15	4118094N3	4117309N1	4115922N1	4118202N1	4115921N9	4118094N17	4115921N2	4115921N1	4115921N6
40	4012	415921N9	DEFLECTOR ASSEMBLY—Cylinder air (metal) (between cylinders No. 6-7).....	-	1															
			Used on the following engines: (47468, 47469, 73229 to 73279, 73304 to 73429, 73432 to 73500, 80227 to 80236, 80242 to 80279, 88168 to 88196, 155763 to 155803, 155824 to 155879, 156289 to 156986, 157155 to 157186, 426121 to 426206, 426347, 426451 to 426620, 454699 to 454781, 454819 to 454844 and 454862 to 455407)																
			415921N9 supersedes and is supplied for replacement of 415921N2 and 418094N17.																	
		@ 418094N17	DEFLECTOR ASSEMBLY—Cylinder air (plastic) (between cylinders No. 6-7).....	-	1															
			Used on the following engines: (73501 to 73914, 80137 to 80226, 80237 to 80241, 155804 to 155817, 156987 to 157154, 157187 to 158093, 183147 to 183464, 425321 to 426120, 426207 to 426346, 426348 to 426450, 426621 to 426720, 454477 to 454698, 454782 to 454818 and 454845 to 454861)																
			Superseded by 415921N9.																	
		415921N1	DEFLECTOR ASSEMBLY—Cylinder air (metal) (between cylinders No. 7-8).....	-	1															
			Used on the following engines: (47468, 47469, 73229 to 73279, 73304 to 73429, 73432 to 73500, 80227 to 80236, 80242 to 80279, 88168 to 88196, 155763 to 155803, 155824 to 155879, 156289 to 156986, 157155 to 157186, 426121 to 426206, 426347, 426451 to 426620, 454699 to 454781, 454819 to 454844 and 454862 to 455407)																
			415921N1 supersedes and is supplied for replacement of 415921N2 and 415921N6.																	
		@ 418094N2	DEFLECTOR ASSEMBLY--Cylinder air (plastic) (between cylinders No. 7-8).....	-	1															
			Used on the following engines: (73501 to 73914, 80137 to 80226, 80237 to 80241, 155804 to 155817, 156987 to 157154, 157187 to 158093, 183147 to 183464, 425321 to 426120, 426207 to 426346, 426348 to 426450, 426621 to 426720, 454477 to 454698, 454782 to 454818 and 454845 to 454861)																
			Superseded by 415921N1.																	
		415201	PLATE AND BOLT ASSEMBLY—Cylinder air deflector upper clamp.....	6	5	1	-	-	1	1	1	1	-	1	1	1	1	1	1	1
		* 112814	PLATE—Cylinder air deflector upper clamp.....	6	5	1	-	-	1	1	1	1	-	1	1	1	1	1	1	1
		* 2070D29	BOLT—Cylinder air deflector upper clamp plate.....	6	5	1	-	-	1	1	1	1	-	1	1	1	1	1	1	1

(-40B AND -60)

Fig. No.	Index Number	Part Number	1	2	3	4	5	6	7	Nomenclature	Quantity Used Per Engine -40B	-60	Per Assembly 415921N1	415921N8	418091N16	415921N3	415921N7	418091N15	418091N3	417301N1	415922N1	418202N1	415921N9	418091N17	418094N2	415921N2	415921N6
		27D130								WASHER—Cylinder air deflector upper clamp plate to deflector	18	15	3	–	–	3	3	–	–	–	3	–	3	–	–	3	3
		66D19								RIVET—Cylinder air deflector upper clamp plate to deflector (.125 in. x .250 in.)	18	15	3	–	–	3	3	–	–	–	3	–	3	–	–	3	3
		66D61								RIVET—Cylinder air deflector upper clamp plate to deflector (.125 in. x .281 in.)	–	15	–	–	–	–	–	3	3	–	–	3	–	3	3	–	–
		420699								CLAMP ASSEMBLY—Cylinder air deflector air blast tube (1.52 in. ID)	2	2	–	–	–	1	–	–	1	–	–	–	1	1	–	–	1
										420699 supersedes and is supplied for replacement of 65923.																	
		420235								CLAMP ASSEMBLY—Cylinder air deflector air blast tube (1.77 in. ID)	–	1	–	–	–	–	1	1	–	–	–	–	–	–	–	–	–
	*	65923								CLAMP—Cylinder air deflector air blast tube	2	2	–	–	–	1	–	–	1	–	–	–	1	1	–	–	1
	*	118384								CLAMP—Cylinder air deflector air blast tube	–	1	–	–	–	–	1	1	–	–	–	–	–	–	–	–	–
	*	118422								LUG—Cylinder air deflector air blast tube clamp	2	3	–	–	–	1	1	1	1	–	–	–	1	1	–	–	1
		65924								PLUG—Cylinder air deflector air blast tube clamp (1.515 in. OD)	2	2	–	–	–	1	–	–	1	–	–	–	1	1	–	–	1
		118385								PLUG—Cylinder air deflector air blast tube clamp (1.765 in. OD)	–	1	–	–	–	–	1	1	–	–	–	–	–	–	–	–	–
		3D10								BOLT—Cylinder air deflector air blast tube clamp (1.563 in. long)	2	2	–	–	–	1	–	–	1	–	–	–	1	1	–	–	1
		3D12								BOLT—Cylinder air deflector air blast tube clamp (1.625 in. long)	–	1	–	–	–	–	1	1	–	–	–	–	–	–	–	–	–
		34D51								WASHER—Cylinder air deflector air blast tube clamp	3	3	–	–	–	1	1	1	1	–	–	–	1	1	–	–	1
		2D1								NUT—Cylinder air deflector air blast tube clamp (plain)	2	2	–	–	–	1	–	–	1	–	–	–	1	1	–	–	1
		356-428								PALNUT—Cylinder air deflector air blast tube clamp nut (Wright Part No. 2000D1)	2	2	–	–	–	1	–	–	1	–	–	–	1	1	–	–	1
		4040D4								NUT—Cylinder air deflector air blast tube clamp	–	1	–	–	–	–	1	1	–	–	–	–	–	–	–	–	–
		27D130								WASHER—Cylinder air deflector air blast tube clamp to deflector	8	12	–	–	–	4	4	–	–	–	–	–	4	–	–	–	4
		66D19								RIVET—Cylinder air deflector air blast tube clamp to deflector (.125 in. x .250 in.)	8	12	–	–	–	4	4	–	–	–	–	–	4	–	–	–	4
		66D25								RIVET—Cylinder air deflector air blast tube clamp to deflector (.125 in. x .313 in.)	–	12	–	–	–	–	–	4	4	–	–	–	–	4	–	–	–
	*	113622								DEFLECTOR—Cylinder air	6	6	1	1	–	1	1	–	–	–	–	–	1	–	–	1	1
	*	116743N15								DEFLECTOR—Cylinder air	–	2	–	–	1	–	–	–	–	–	–	–	–	–	–	–	–
	*	116743N14								DEFLECTOR—Cylinder air	–	1	–	–	–	–	–	1	–	–	–	–	–	–	–	–	–
	*	116743N3								DEFLECTOR—Cylinder air	–	1	–	–	–	–	–	–	1	–	–	–	–	–	–	–	–
	*	115300								DEFLECTOR—Cylinder air	1	–	–	–	–	–	–	–	–	1	–	–	–	–	–	–	–
	*	113621								DEFLECTOR—Cylinder air	–	1	–	–	–	–	–	–	–	–	1	–	–	–	–	–	–
	*	116756N1								DEFLECTOR—Cylinder air	–	1	–	–	–	–	–	–	–	–	–	1	–	–	–	–	–
	*	116743N16								DEFLECTOR—Cylinder air	–	1	–	–	–	–	–	–	–	–	–	–	1	–	–	–	–
	*	116743N2								DEFLECTOR—Cylinder air	–	1	–	–	–	–	–	–	–	–	–	–	–	1	–	–	–
		120215								PLATE—Cylinder air deflector gun blast cutout reinforcing	–	2	–	1	1	–	–	–	–	–	–	–	–	–	–	–	–
		120217								PAD—Cylinder air deflector gun blast cutout reinforcing plate	–	2	–	1	1	–	–	–	–	–	–	–	–	–	–	–	–
		2109D4								GROMMET—Cylinder air deflector gun blast cutout reinforcing plate	–	2	–	–	1	–	–	–	–	–	–	–	–	–	–	–	–
		AN520-10-8								SCREW—Cylinder air deflector gun blast cutout reinforcing plate and pad to deflector (Wright Part No. 123D1)	–	6	–	3	3	–	–	–	–	–	–	–	–	–	–	–	–

(-40B AND -60)

Fig. No.	Index Number	Part Number	Nomenclature	Quantity Used Per Engine -40B	Quantity Used Per Engine -60	Per Assembly 4115921N1	4115921N18	4118096N16	4115923N13	4115921N17	4118094N15	4118096N13	4173091N11	4115922N11	4118202N11	4115921N19	4118094N17	4118096N12	4115921N12	4115921N16
		27D131	WASHER—Cylinder air deflector gun blast cutout reinforcing plate and pad to deflector	–	6	–	3	3	–	–	–	–	–	–	–	–	–	–	–	–
		2087D9	NUT—Cylinder air deflector gun blast cutout reinforcing plate and pad to deflector	–	6	–	3	3	–	–	–	–	–	–	–	–	–	–	–	–
		116472	PLATE—Cylinder air deflector clamp spring	14	14	2	2	2	2	2	2	2	2	2	2	2	2	2	2	2
			116472 supersedes and is supplied for replacement of 113510.																	
		27D130	WASHER—Cylinder air deflector clamp spring plate to deflector	28	28	4	4	–	4	4	–	–	4	4	–	4	–	–	4	4
		66D19	RIVET—Cylinder air deflector clamp spring plate to deflector (.125 in. x .250 in.)	28	28	4	4	–	4	4	–	–	4	4	–	4	–	–	4	4
			66D19 supersedes 66D25 at this location.																	
		66D61	RIVET—Cylinder air deflector clamp spring plate to deflector (.125 in. x .281 in.)	–	28	–	–	4	–	–	4	4	–	–	4	–	4	4	–	–
		112883	BUTTON—Cylinder air deflector buffer	40	40	6	6	6	6	6	6	6	4	4	4	6	6	6	6	6
		113394	GROMMET AND PAD—Cylinder air deflector cylinder barrel	–	6	–	–	1	–	–	1	1	–	–	–	–	1	1	–	–
		68837	CLAMP—Cylinder air deflector lower	6	6	1	1	1	1	1	1	1	–	–	–	1	1	1	1	1
		68840	PLATE—Cylinder air deflector lower clamp	6	6	1	1	1	1	1	1	1	–	–	–	1	1	1	1	1
		127549	SPACER—Cylinder air deflector lower clamp and plate	–	6	–	–	1	–	–	1	1	–	–	–	–	1	1	–	–
		27D130	WASHER—Cylinder air deflector lower clamp to deflector	24	24	4	4	–	4	4	–	–	–	–	–	4	–	–	4	4
		66D19	RIVET—Cylinder air deflector lower clamp to deflector (.125 in. x .250 in.)	24	24	4	4	–	4	4	–	–	–	–	–	4	–	–	4	4
		66D60	RIVET—Cylinder air deflector lower clamp to deflector (.125 in. x .218 in.)	–	24	–	–	4	–	–	4	4	–	–	–	–	4	4	–	–
		66D56	RIVET—Cylinder air deflector lower clamp and plate to deflector (.125 in. x .280 in.)	12	12	2	2	–	2	2	–	–	–	–	–	2	–	–	2	2
		66D25	RIVET—Cylinder air deflector lower clamp and plate to deflector (.125 in. x .313 in.)	–	12	–	–	2	–	–	2	2	–	–	–	–	2	2	–	–
		69525	COVER—Cylinder air deflector magneto conduit substituting	6	3	1	–	–	1	1	1	1	–	–	–	–	–	–	–	–
		27D130	WASHER—Cylinder air deflector magneto conduit substituting cover to deflector	18	9	3	–	–	3	3	3	3	–	–	–	–	–	–	–	–
		AN515-6-8	SCREW—Cylinder air deflector magneto conduit substituting cover to deflector (Wright Part No. 15D5)	18	9	3	–	–	3	3	3	3	–	–	–	–	–	–	–	–
		2087D1	NUT—Cylinder air deflector magneto conduit substituting cover to deflector	18	9	3	–	–	3	3	3	3	–	–	–	–	–	–	–	–

(-40B AND -60)

Fig. No.	Index Number	Part Number	Nomenclature 1 2 3 4 5 6 7	Per Engine -40B	Per Engine -60	Quantity Used Per Assembly 415921N1	415921N8	418094N16	415921N3	415921N7	418094N15	418094N3	417309N1	415922N1	418202N1	415921N9	418094N17	418094N2	415921N2	415921N6
			CYLINDER AIR DEFLECTOR ATTACHING PARTS																	
40	4014	90D13	SCREW—Cylinder air deflector to oil sump	2	2															
40	4016	27D111	WASHER—Cylinder air deflector to oil sump. *27D111 supersedes and is supplied for replacement of 27D4 installed on early engines.*	2	2															
40	4018	68839	GROMMET—Cylinder air deflector upper clamp	9	9															
40	4020	68842	PLATE—Cylinder air deflector upper clamp grommet	9	9															
40	4022	4040D5	NUT—Cylinder air deflector upper grommet and clamp plate. *4040D5 supersedes 2087D5.*	9	9															
40	4024	113509	SPRING—Cylinder air deflector upper clamp plate	9	9															
40	4026	68838	CLAMP—Cylinder air deflector lower, front	8	8															
40	4028	45D29	BOLT—Cylinder air deflector lower clamp (2.22 in. long)	8	6															
		45D33	BOLT—Cylinder air deflector and extension, lower clamp (3.50 in. long). *Used with deflector assembly 420586N1.*	2	2															
40	4030	68884	SPACER—Cylinder air deflector lower clamp	8	8															
40	4032	4040D5	NUT—Cylinder air deflector lower clamp. *4040D5 supersedes 2087D5.*	8	8															
40	4034	3D9	BOLT—Cylinder air deflector to rocker box cover (.625 in. long)	2	–															
		6D9	BOLT—Cylinder air deflector to rocker box cover (.750 in. long)	–	4															
40	4036	2087D3	NUT—Cylinder air deflector to rocker box cover	2	–															
		2101D3	NUT—Cylinder air deflector to rocker box cover (slotted hex)	–	4															
40	4038	34D51	WASHER—Cylinder air deflector to rocker box cover (.266 in. x .500 in. x .047 in.)	2	4															
		27D98	WASHER—Cylinder air deflector to rocker box cover (.266 in. x .782 in. x .063 in.)	–	4															
		57D1	COTTER PIN—Cylinder air deflector to rocker box cover nut	–	4															

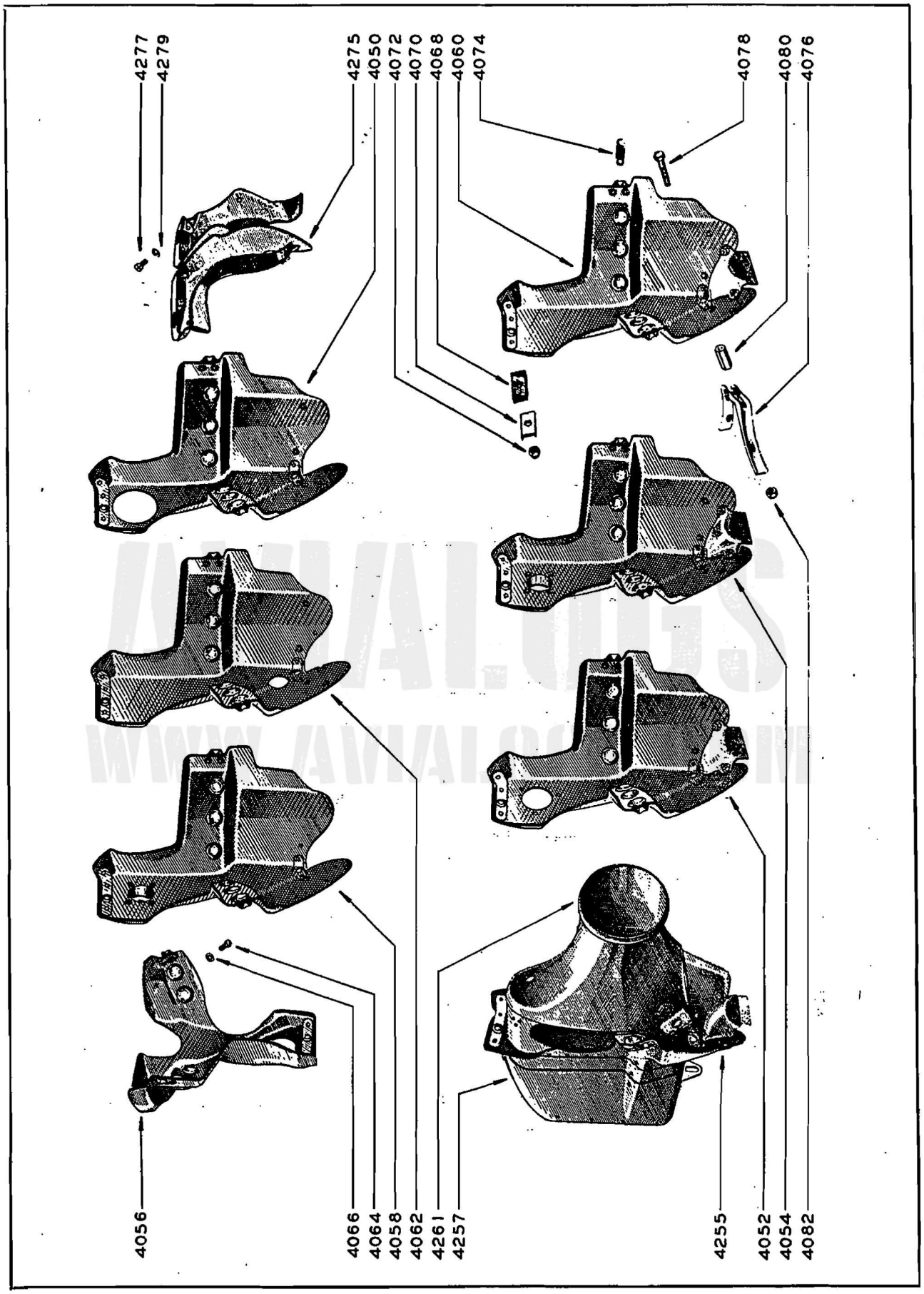

Numbers shown are index numbers and are numerically arranged in the Group Assembly Parts List

Figure 41—Inter-Cylinder and Cylinder Head Air Deflectors (R1820-54)

INTER-CYLINDER AIR DEFLECTORS (-54)

Fig. No.	Index Number	Part Number	Nomenclature 1 2 3 4 5 6 7	Per Engine	Quantity Used Per Assembly: 415921N11	418094N13	418094N11	415921N14	415921N13	418094N17	415921N19	418094N12	415921N10	418094N18
			Except where otherwise noted all of the parts listed in this group are used on all engines.											
41	4050	415921N11	DEFLECTOR ASSEMBLY—Cylinder air (metal) (between cylinders No. 1–2) *415921N11 supersedes and is supplied for replacement of 418094N2 and 418094N19 at this location.*	1	1									
		418094N3	DEFLECTOR ASSEMBLY—Cylinder air (plastic) (between cylinders No. 2–3 and 8–9)..... *Used for engines 86728 to 86737.* *For deflectors used on all other engines at this location see page 162.*	2		2									
		418094N12	DEFLECTOR ASSEMBLY—Cylinder air (plastic) (between cylinders No. 3–4)..... *Used for engines 86727 to 86793.*	1									1	
41	4052	415921N4	DEFLECTOR ASSEMBLY—Cylinder air (metal) (between cylinders No. 3–4) *Used for all engines except 86727 to 86793.*	1				1						
		418094N3	DEFLECTOR ASSEMBLY—Cylinder air (plastic) (between cylinders No. 4–5)..... *Used for engines 86727 to 86793.*	1		1								
41	4054	415921N3	DEFLECTOR ASSEMBLY—Cylinder air (metal) (between cylinders No. 4–5) *Used for all engines except 86727 to 86793.*	1					1					
41	4056	417314N1	DEFLECTOR ASSEMBLY—Cylinder air (metal) (between cylinders No. 5–6) *417314N1 supersedes and is supplied for replacement of 415922N1.*	1							1			
		@, 418094N17	DEFLECTOR ASSEMBLY—Cylinder air (plastic) (between cylinders No. 6–7)..... *Used for engines 86727 to 86793.* *Superseded by 415921N9.*	1						1				
41	4058	415921N9	DEFLECTOR ASSEMBLY—Cylinder air (metal) (between cylinders No. 6–7) *Used for all engines except 86727 to 86793.*	1							1			
		@, 418094N2	DEFLECTOR ASSEMBLY—Cylinder air (plastic) (between cylinders No. 7–8)..... *Used for engines 86727 to 86793.* *Superseded by 415921N1.*	1		1								
41	4060	415921N1	DEFLECTOR ASSEMBLY—Cylinder air (metal) (between cylinders No. 7–8) *Used for all engines except 86727 to 86793.* *415921N1 supersedes and is supplied for replacement of 415921N2.*											
41	4062	415921N10	DEFLECTOR ASSEMBLY—Cylinder air (metal) (between cylinders No. 9–1) *415921N10 supersedes and is supplied for replacement of 418094N2 and 418094N18 at this location.*	1										1

Fig. No.	Index Number	Part Number	1	2	3	4	5	6	7	Nomenclature	Per Engine	Quantity Used Per Assembly														
												4115921N11	4118021N13	4115921N12	4115921N14	4115921N3	4117321N1	4118021N17	4115921N19	4118021N2	4115921N1	4115921N10	4118021N9	4115921N1	4115921N2	4118021N18
		415201								PLATE AND BOLT ASSEMBLY—Cylinder air deflector upper clamp..	9	1	1	1	1	1	1	1	1	1	1	1	1	1	1	1
	*	112814								PLATE—Cylinder air deflector upper clamp.....	9	1	1	1	1	1	1	1	1	1	1	1	1	1	1	1
	*	2070D29								BOLT—Cylinder air deflector upper clamp plate.....	9	1	1	1	1	1	1	1	1	1	1	1	1	1	1	1
		27D130								WASHER—Cylinder air deflector upper clamp plate to deflector.....	27	3	–	–	3	3	3	–	3	–	3	3	–	3	3	–
		66D19								RIVET—Cylinder air deflector upper clamp plate to deflector (.125 in. x .250 in.).....	27	3	–	–	3	3	3	–	3	–	3	3	–	3	3	–
		66D61								RIVET—Cylinder air deflector upper clamp plate to deflector (.125 in. x .281 in.).....	18	–	3	3	–	–	–	3	–	3	–	–	3	–	–	3
		420699								CLAMP ASSEMBLY—Cylinder air deflector air blast tube.....	4	–	1	–	–	1	–	1	1	–	–	–	–	–		–
	*	65923								CLAMP—Cylinder air deflector air blast tube.....	4	–	1	–	–	1	–	1	1	–	–	–	–	–	–	–
	*	118422								LUG—Cylinder air deflector air blast tube clamp.....	4	–	1	–	–	1	–	1	1	–	–	–	–	–	–	–
		127322								RING—Cylinder air deflector air blast tube hole reinforcing.....	3	–	1	–	–	–	–	1	–	–	–	–	–	–	–	–
		65924								PLUG—Cylinder air deflector air blast tube clamp.....	4	–	1	–	–	1	–	1	1	–	–	–	–	–	–	–
		3D10								BOLT—Cylinder air deflector air blast tube clamp.....	4	–	1	–	–	1	–	1	1	–	–	–	–	–	–	–
		34D51								WASHER—Cylinder air deflector air blast tube clamp.....	4	–	1	–	–	1	–	1	1	–	–	–	–	–	–	–
		2D1								NUT—Cylinder air deflector air blast tube clamp.....	4	–	1	–	–	1	–	1	1	–	–	–	–	–	–	–
		356-428								PALNUT—Cylinder air deflector air blast tube clamp nut (Wright Part No. 2000D1).....	4	–	1	–	–	1	–	1	1	–	–	–	–	–	–	–
		27D130								WASHER—Cylinder air deflector air blast tube clamp to deflector.....	16	–	–	–	–	4	–	–	4	–	–	–	–	–	–	–
		66D19								RIVET—Cylinder air deflector air blast tube clamp to deflector (.125 in. x .250 in.).....	16	–	–	–	–	4	–	–	4	–	–	–	–	–	–	–
		66D25								RIVET—Cylinder air deflector air blast tube clamp to deflector (.125 in. x .313 in.).....	12	–	4	–	–	–	–	4	–	–	–	–	–	–	–	–
	*	113622								DEFLECTOR—Cylinder air.....	6	1	–	–	1	1	–	–	1	–	1	1	–	–	1	–
	*	116743N3								DEFLECTOR—Cylinder air.....	3	–	1	–	–	–	–	–	–	–	–	–	–	–	–	–
	*	116743N11								DEFLECTOR—Cylinder air.....	1	–	–	1	–	–	–	–	–	–	–	–	–	–	–	–
	*	115301								DEFLECTOR—Cylinder air.....	1	–	–	–	–	–	1	–	–	–	–	–	–	–	–	–
	*	116743N16								DEFLECTOR—Cylinder air.....	1	–	–	–	–	–	–	1	–	–	–	–	–	–	–	–
	*	116743N2								DEFLECTOR—Cylinder air.....	1	–	–	–	–	–	–	–	–	1	–	–	–	–	–	–
	*	116743N18								DEFLECTOR—Cylinder air.....	1	–	–	–	–	–	–	–	–	–	–	–	1	–	–	–
	*	113621								DEFLECTOR—Cylinder air.....	1	–	–	–	–	–	–	–	–	–	–	–	–	1	–	–
	*	116743N17								DEFLECTOR—Cylinder air.....	1	–	–	–	–	–	–	–	–	–	–	–	–	–	–	1
		116472								PLATE—Cylinder air deflector clamp spring.....	18	2	2	2	2	2	2	2	2	2	2	2	2	2	2	2
		27D130								WASHER—Cylinder air deflector clamp spring plate to deflector.....	36	4	–	–	4	4	4	–	4	–	4	4	–	4	4	–
		66D19								RIVET—Cylinder air deflector clamp spring plate to deflector (.125 in. x .250 in.).....	36	4	–	–	4	4	4	–	4	–	4	4	–	4	4	–
		66D61								RIVET—Cylinder air deflector clamp spring plate to deflector (.125 in. x .281 in.).....	24	–	4	4	–	–	–	4	–	4	–	–	4	–	–	4
		112883								BUTTON—Cylinder air deflector buffer.....	52	6	6	6	6	6	4	6	6	6	6	6	6	4	6	6
		113394								GROMMET AND PAD—Cylinder air deflector cylinder barrel.....	6	–	1	1	–	–	–	1	–	1	–	–	1	–	–	1
		68837								CLAMP—Cylinder air deflector lower.....	8	1	1	1	1	1	–	1	1	1	1	1	1	–	1	1

(-54)

Fig. No.	Index Number	Part Number	Nomenclature 1 2 3 4 5 6 7	Per Engine	Quantity Used Per Assembly 415921N11	418094N3	418094N12	415921N4	415921N3	417314N1	418094N17	415921N9	418094N2	415921N1	415921N10	418094N19	415922N1	415921N2	418094N18
		68840	PLATE—Cylinder air deflector lower clamp	8	1	1	1	1	1	-	1	1	1	1	1	1	-	1	1
		127549	SPACER—Cylinder air deflector lower clamp and plate	6	-	1	1	-	-	-	1	-	1	-	-	1	-	-	1
		27D130	WASHER—Cylinder air deflector lower clamp to deflector	28	4	-	-	4	4	-	-	4	-	4	4	-	-	4	-
		66D19	RIVET—Cylinder air deflector lower clamp to deflector (.125 in. x .250 in.)	28	4	-	-	4	4	-	-	4	-	4	4	-	-	4	-
		66D60	RIVET—Cylinder air deflector lower clamp to deflector (.125 in. x .218 in.)	32	-	4	4	-	-	-	4	-	4	-	-	4	-	-	4
		66D56	RIVET—Cylinder air deflector lower clamp and plate to deflector (.125 in. x .280 in.)	14	2	-	-	2	2	-	-	2	-	2	2	-	-	2	-
		66D25	RIVET—Cylinder air deflector lower clamp and plate to deflector (.125 in. x .313 in.)	16	-	2	2	-	-	-	2	-	2	-	-	2	-	-	2
		69525	COVER—Cylinder air deflector magneto conduit substituting	5	-	1	1	1	1	-	-	-	-	1	-	-	-	-	-
		27D130	WASHER—Cylinder air deflector magneto conduit substituting cover to deflector	15	-	3	3	3	3	-	-	-	-	3	-	-	-	-	-
		AN515-6-8	SCREW—Cylinder air deflector magneto conduit substituting cover to deflector (Wright Part No. 15D5)	15	-	3	3	3	3	-	-	-	-	3	-	-	-	-	-
		2087D1	NUT—Cylinder air deflector magneto conduit substituting cover to deflector	15	-	3	3	3	3	-	-	-	-	3	-	-	-	-	-

CYLINDER AIR DEFLECTOR ATTACHING PARTS

Fig. No.	Index Number	Part Number	Nomenclature	Per Engine
41	4064	90D13	SCREW—Cylinder air deflector to oil sump	2
41	4066	27D111	WASHER—Cylinder air deflector to oil sump	2
41	4068	68839	GROMMET—Cylinder air deflector upper clamp	9
41	4070	68842	PLATE—Cylinder air deflector upper clamp grommet	9
41	4072	4040D5	NUT—Cylinder air deflector upper grommet and clamp plate	9
41	4074	113509	SPRING—Cylinder air deflector upper clamp plate	9
41	4076	68838	CLAMP—Cylinder air deflector lower, front	8
41	4078	45D29	BOLT—Cylinder air deflector lower clamp (2.22 in. long) *Quantities used: Eight units used for engines 86728 to 86737; six units used for all engines except 86728 to 86737.*	#
		45D33	BOLT—Cylinder air deflector and extension lower clamp (3.50 in. long) *Used for all engines except 86728 to 86737.* *Used with deflector 420586N1.*	2
41	4080	68884	SPACER—Cylinder air deflector lower clamp *Quantities used: Eight units used for engines 86728 to 86737; ten units used for all others.*	#
41	4082	4040D5	NUT—Cylinder air deflector lower clamp	8

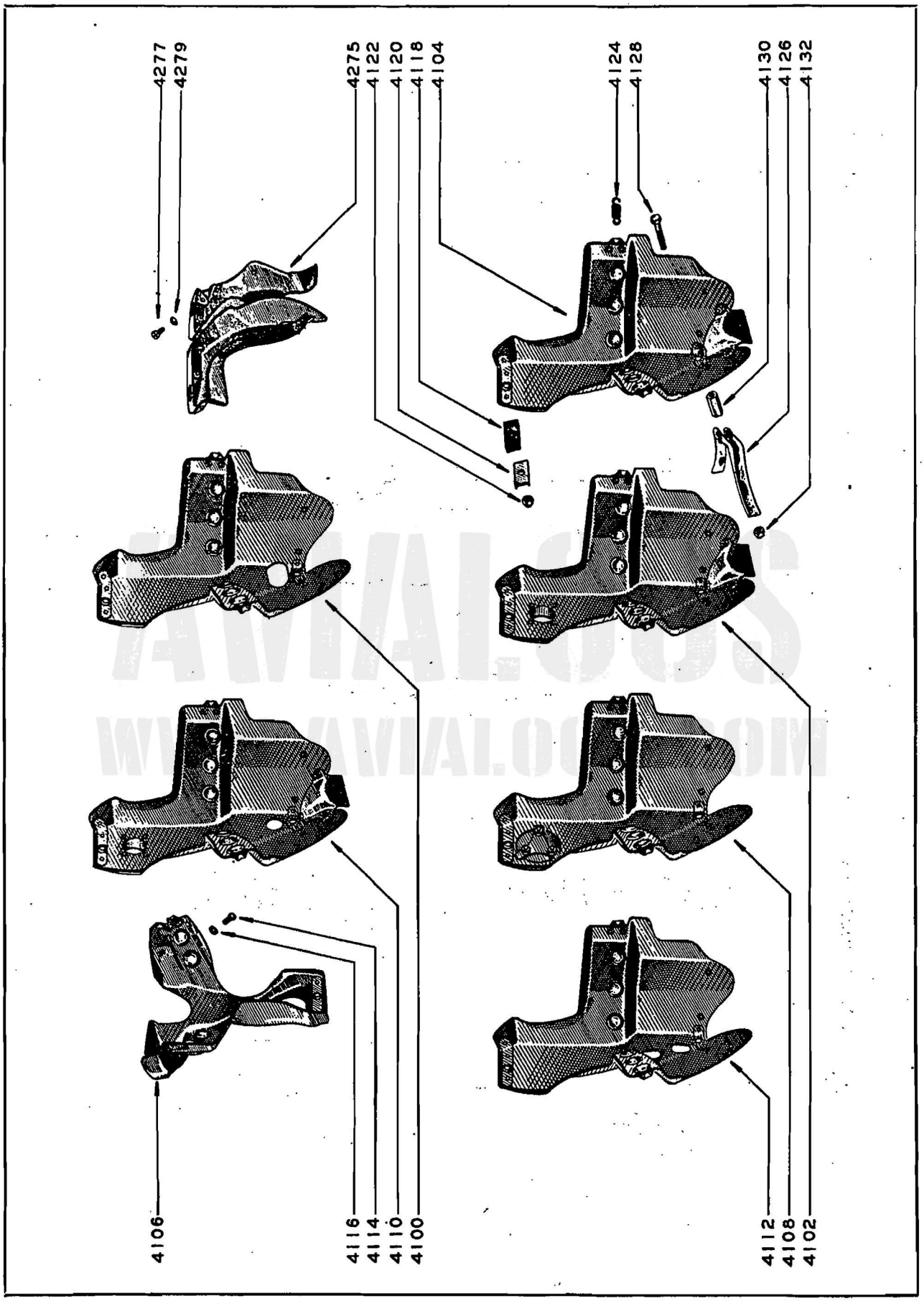

Numbers shown are index numbers and are numerically arranged in the Group Assembly Parts List

Figure 42—Inter-Cylinder and Cylinder Head Air Deflectors (R1820-65, -73 and -97)

INTER-CYLINDER AIR DEFLECTORS (-65, -73, AND -97)

Fig. No.	Index Number	Part Number	Nomenclature 1 2 3 4 5 6 7	Quantity Used: Per Engine A	Quantity Used: Per Engine B	Per Assembly: 417313N1	415921N3	415921N1	417314N1	415921N5	417312N1	420118N1	417308N1	412606	412607	414323	414324	414325	414326	415921N2
			Except where otherwise noted all of the parts listed in this group are used on all engines.																	
42	4100	417313N1	DEFLECTOR ASSEMBLY—Cylinder air (between cylinders No. 1-2)..... *417313N1 supersedes and is supplied for replacement of 414325.*	1	1															
42	4102	415921N3	DEFLECTOR ASSEMBLY—Cylinder air (between cylinders No. 2-3)..... *415921N3 supersedes and is supplied for replacement of 412606.*	1	1															
42	4104	415921N1	DEFLECTOR ASSEMBLY—Cylinder air (between cylinders No. 3-4, 4-5 and 7-8)..... *415921N1 supersedes and is supplied for replacement of 412607 and 415921N2.*	3	3															
42	4106	417314N1	DEFLECTOR ASSEMBLY—Cylinder air (between cylinders No. 5-6)..... *417314N1 supersedes and is supplied for replacement of 414326.*	1	1															
		415921N1	DEFLECTOR ASSEMBLY—Cylinder air (between cylinders No. 6-7)..... *415921N1 supersedes and is supplied for replacement of 412607.*	1	–															
42	4108	415921N5	DEFLECTOR ASSEMBLY—Cylinder air (between cylinders No. 6-7)..... *415921N5 supersedes and is supplied for replacement of 412607.*	–	1															
42	4110	417312N1	DEFLECTOR ASSEMBLY—Cylinder air (between cylinders No. 8-9)..... *Used for all -65 and -73 engines and on the following -97 engines: 47467, 81085 to 81104, 81712 to 81797, 81978 to 82306, 190066 to 190522.* *417312N1 supersedes and is supplied for replacement of 414324.*	1	1															
		420118N1	DEFLECTOR ASSEMBLY—Cylinder air (between cylinders No. 8-9)..... *Used on the following -97 engines: 69425 to 73154, 80787 to 81084, 81105 to 81234, 81236 to 81711, 81798 to 81977.*	–	1															
42	4112	417308N1	DEFLECTOR ASSEMBLY—Cylinder air (between cylinders No. 9-1)..... *417308N1 supersedes and is supplied for replacement of 414323.*	1	1															
		415201	PLATE AND BOLT ASSEMBLY—Cylinder air deflector upper clamp...	9	9	1	1	1	1	1	1	1	1	1	1	1	1	1	1	1
		* 112814	PLATE—Cylinder air deflector upper clamp.....	9	9	1	1	1	1	1	1	1	1	1	1	1	1	1	1	1
		* 2070D29	BOLT—Cylinder air deflector upper clamp plate.....	9	9	1	1	1	1	1	1	1	1	1	1	1	1	1	1	1
		27D130	WASHER—Cylinder air deflector upper clamp plate to deflector.....	27	27	3	3	3	3	3	3	3	3	3	3	3	3	3	3	3
		66D19	RIVET—Cylinder air deflector upper clamp plate to deflector.....	27	27	3	3	3	3	3	3	3	3	3	3	3	3	3	3	3
		420699	CLAMP ASSEMBLY—Cylinder air deflector air blast tube..... *420699 supersedes and is supplied for replacement of 65923.*	2	2	–	1	–	–	–	1	1	–	1	–	–	1	–	–	–

A Used for -73 engines.
B Used for -65 and -97 engines.

(-65, -73 AND -97)

Fig. No.	Index Number	Part Number	Nomenclature 1 2 3 4 5 6 7	Per Engine A	Per Engine B	417313N1	415921N3	415921N1	417314N1	415921N5	417312N1	420118N1	417308N1	412606	412607	414323	414324	414325	414326	415921N2
		* 65923	CLAMP—Cylinder air deflector air blast tube	2	2	–	1	–	–	–	1	1	–	1	–	–	1	–	–	–
		* 118422	LUG—Cylinder air deflector air blast tube clamp	2	2	–	1	–	–	–	1	1	–	1	–	–	1	–	–	–
		65924	PLUG—Cylinder air deflector air blast tube clamp	2	2	–	1	–	–	–	1	1	–	1	–	–	1	–	–	–
		3D10	BOLT—Cylinder air deflector air blast tube clamp	2	2	–	1	–	–	–	1	1	–	1	–	–	1	–	–	–
		34D51	WASHER—Cylinder air deflector air blast tube clamp	2	2	–	1	–	–	–	1	1	–	1	–	–	1	–	–	–
		2D1	NUT—Cylinder air deflector air blast tube clamp	2	2	–	1	–	–	–	1	1	–	1	–	–	1	–	–	–
		356-428	PALNUT—Cylinder air deflector air blast tube clamp nut (Wright Part No. 2000D1)	2	2	–	1	–	–	–	1	1	–	1	–	–	1	–	–	–
		27D130	WASHER—Cylinder air deflector air blast tube clamp to deflector	8	8	–	4	–	–	–	4	4	–	4	–	–	4	–	–	–
		66D19	RIVET—Cylinder air deflector air blast tube clamp to deflector	8	8	–	4	–	–	–	4	4	–	4	–	–	4	–	–	–
		* 115303	DEFLECTOR—Cylinder air	1	1	1	–	–	–	–	–	–	–	–	–	–	–	–	–	–
		* 113622	DEFLECTOR—Cylinder air	5	5	–	1	1	–	1	–	–	–	–	–	–	–	–	–	1
		* 115301	DEFLECTOR—Cylinder air	1	1	–	–	–	1	–	–	–	–	–	–	–	–	–	–	–
		* 115305	DEFLECTOR—Cylinder air	1	1	–	–	–	–	–	1	1	–	–	–	–	–	–	–	–
		* 115308	DEFLECTOR—Cylinder air	1	1	–	–	–	–	–	–	–	1	–	–	–	–	–	–	–
		* 69477	DEFLECTOR—Cylinder air	5	5	–	–	–	–	–	–	–	–	1	1	–	–	–	–	–
		* 111891	DEFLECTOR—Cylinder air	1	1	–	–	–	–	–	–	–	–	–	–	1	–	–	–	–
		* 111892	DEFLECTOR—Cylinder air	1	1	–	–	–	–	–	–	–	–	–	–	–	1	–	–	–
		* 111893	DEFLECTOR—Cylinder air	1	1	–	–	–	–	–	–	–	–	–	–	–	–	1	–	–
		* 111890	DEFLECTOR—Cylinder air	1	1	–	–	–	–	–	–	–	–	–	–	–	–	–	1	–
		118741	PLATE—Cylinder air deflector air blast tube hole cover	–	1	–	–	–	–	1	–	–	–	–	–	–	–	–	–	–
		118742	SPIDER—Cylinder air deflector air blast tube hole cover plate	–	1	–	–	–	–	1	–	–	–	–	–	–	–	–	–	–
		27D130	WASHER—Cylinder air deflector air blast tube hole cover plate to spider	–	3	–	–	–	–	3	–	–	–	–	–	–	–	–	–	–
		AN515-6-8	SCREW—Cylinder air deflector air blast tube hole cover plate to spider (Wright Part No. 15D5)	–	3	–	–	–	–	3	–	–	–	–	–	–	–	–	–	–
		2087D1	NUT—Cylinder air deflector air blast tube hole cover plate to spider	–	3	–	–	–	–	3	–	–	–	–	–	–	–	–	–	–
		116472	PLATE—Cylinder air deflector clamp spring *116472 supersedes and is supplied for replacement of 113510.*	18	18	2	2	2	2	2	2	2	2	2	2	2	2	2	2	2
		27D130	WASHER—Cylinder air deflector clamp spring plate to deflector	36	36	4	4	4	4	4	4	4	4	4	4	4	4	4	4	4
		66D19	RIVET—Cylinder air deflector clamp spring plate to deflector *66D19 supersedes 66D25 at this location.*	36	36	4	4	4	4	4	4	4	4	4	4	4	4	4	4	4
		69524	STRAP—Cylinder air deflector buffer (7.50 in. long)	16	16	–	–	–	–	–	–	–	–	2	2	2	2	2	–	–
		69545	STRAP—Cylinder air deflector buffer (14.50 in. long)	1	1	–	–	–	–	–	–	–	–	–	–	–	–	–	1	–
		27D130	WASHER—Cylinder air deflector buffer strap to deflector	34	34	–	–	–	–	–	–	–	–	4	4	4	4	4	2	–
		AN515-6-8	SCREW—Cylinder air deflector buffer strap to deflector (Wright Part No. 15D5)	34	34	–	–	–	–	–	–	–	–	4	4	4	4	4	2	–
		27D183	WASHER—Cylinder air deflector buffer strap to deflector (at nut end)	34	34	–	–	–	–	–	–	–	–	4	4	4	4	4	2	–

A Used for -73 engines.
B Used for -65 and -97 engines.

(-65, -73 AND -97)

Fig. No.	Index Number	Part Number	Nomenclature 1 2 3 4 5 6 7	Per Engine A	Per Engine B	Quantity Used Per Assembly 417313N1	415921N3	415921N1	417314N1	415921N5	417312N1	420118N1	417308N1	412606	412607	414323	414324	414325	414326	415921N2
		2087D1	NUT—Cylinder air deflector buffer strap to deflector	34	34	-	-	-	-	-	-	-	-	4	4	4	4	4	2	-
		112883	BUTTON—Cylinder air deflector buffer	52	52	6	6	6	4	6	6	6	6	-	-	-	-	-	-	6
		68837	CLAMP—Cylinder air deflector lower	8	8	1	1	1	-	1	1	1	1	1	1	1	1	1	-	1
		68840	PLATE—Cylinder air deflector lower clamp	8	8	1	1	1	-	1	1	1	1	1	1	1	1	1	-	1
		27D130	WASHER—Cylinder air deflector lower clamp to deflector	32	32	4	4	4	-	4	4	4	4	4	4	4	4	4	-	4
		66D19	RIVET—Cylinder air deflector lower clamp to deflector	32	32	4	4	4	-	4	4	4	4	4	4	4	4	4	-	4
		66D56	RIVET—Cylinder air deflector lower clamp and plate to deflector	16	16	2	2	2	-	2	2	2	2	2	2	2	2	2	-	2
		69525	COVER—Cylinder air deflector magneto conduit substituting	6	6	-	1	1	-	-	1	1	-	1	1	-	1	-	-	-
		27D130	WASHER—Cylinder air deflector magneto conduit substituting cover to deflector	18	18	-	3	3	-	-	3	3	-	3	3	-	3	-	-	-
		AN515-6-8	SCREW—Cylinder air deflector magneto conduit substituting cover to deflector (Wright Part No. 15D5)	18	18	-	3	3	-	-	3	3	-	3	3	-	3	-	-	-
		2087D1	NUT—Cylinder air deflector magneto conduit substituting cover to deflector	18	18	-	3	3	-	-	3	3	-	3	3	-	3	-	-	-

CYLINDER AIR DEFLECTOR ATTACHING PARTS

42	4114	90D13	SCREW—Cylinder air deflector to oil sump	2	2
42	4116	27D111	WASHER—Cylinder air deflector to oil sump *27D111 supersedes and is supplied for replacement of 27D4 installed on early engines.*	2	2
42	4118	68839	GROMMET—Cylinder air deflector upper clamp	9	9
42	4120	68842	PLATE—Cylinder air deflector upper clamp grommet	9	9
42	4122	4040D5	NUT—Cylinder air deflector upper grommet and clamp plate *4040D5 supersedes 2087D5.*	9	9
42	4124	113509	SPRING—Cylinder air deflector upper clamp plate	9	9
42	4126	68838	CLAMP—Cylinder air deflector lower, front	8	8
42	4128	45D29	BOLT—Cylinder air deflector lower clamp	8	8
42	4130	68884	SPACER—Cylinder air deflector lower clamp	8	8
42	4132	4040D5	NUT—Cylinder air deflector lower clamp *4040D5 supersedes 2087D5.*	8	8

A Used for -73 engines.
B Used for -65 and —97 engines.

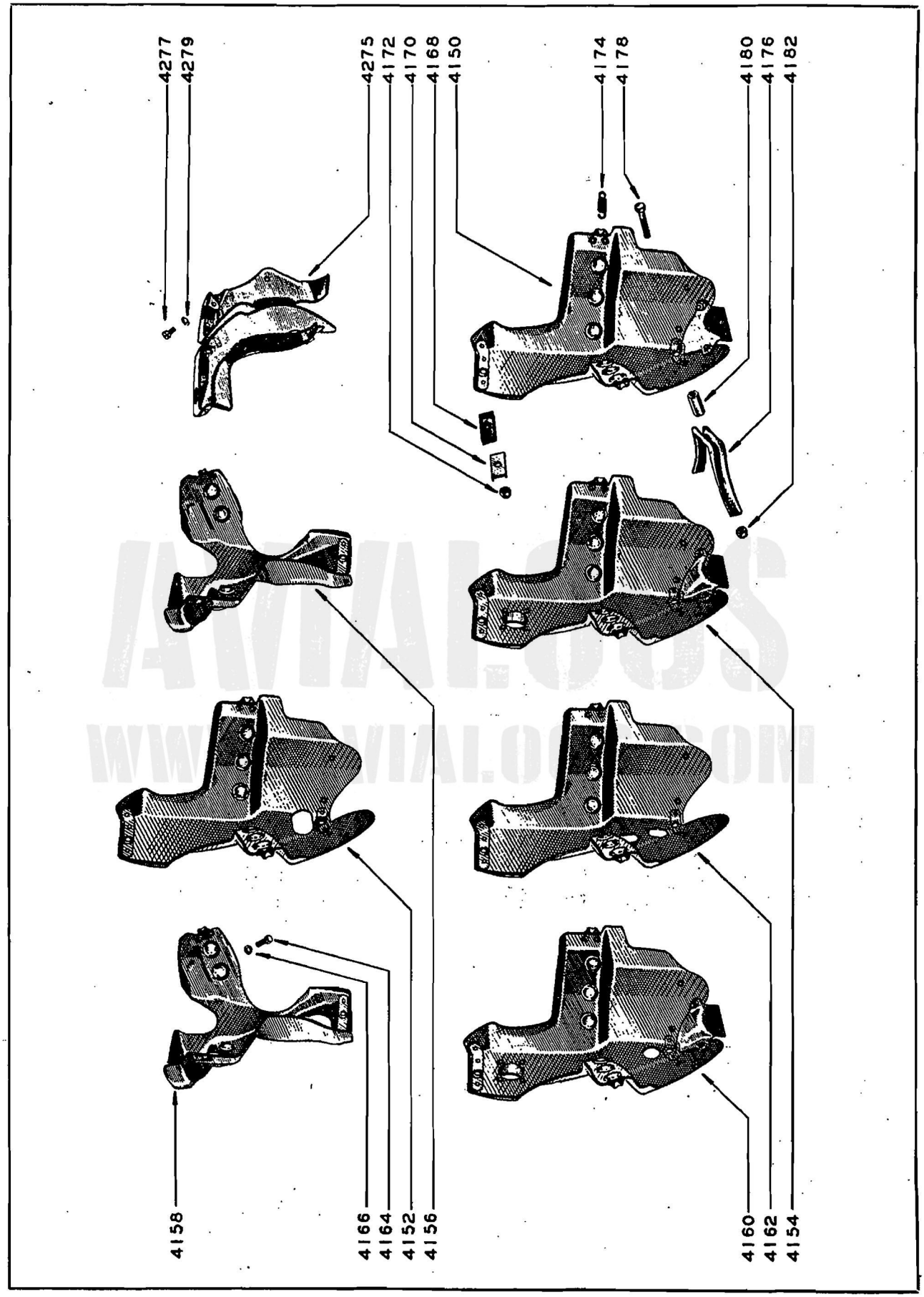

Numbers shown are index numbers and are numerically arranged in the Group Assembly Parts List

Figure 43—Inter-Cylinder and Cylinder Head Air Deflectors (R1820-71)

INTER-CYLINDER AIR DEFLECTORS (-71)

Fig. No.	Index Number	Part Number	Nomenclature 1 2 3 4 5 6 7	Per Engine A	B	C	Quantity Used Per Assembly 415921N1	417313N1	415921N3	415922N1	417314N1
			Except where otherwise noted all of the parts listed in this group are used on all engines.								
43	4150	415921N1	DEFLECTOR ASSEMBLY—Cylinder air (metal) (between cylinders No. 1-2 and 9-1)..... *415921N1 supersedes and is supplied for replacement of 412608 and 415921N2.*	2	–	2					
43	4152	417313N1	DEFLECTOR ASSEMBLY—Cylinder air (metal) (between cylinders No. 1-2)..... *417313N1 supersedes and is supplied for replacement of 414325.*	–	1	–					
43	4154	415921N3	DEFLECTOR ASSEMBLY—Cylinder air (metal) (between cylinders No. 2-3 and 8-9)..... *415921N3 supersedes and is supplied for replacement of 412606.*	2	–	–					
		415921N3	DEFLECTOR ASSEMBLY—Cylinder air (metal) (between cylinders No. 2-3)..... *415921N3 supersedes and is supplied for replacement of 412606.*	–	1	–					
		415921N1	DEFLECTOR ASSEMBLY—Cylinder air (metal) (between cylinders No. 3-4, 4-5, 6-7 and 7-8)..... *415921N1 supersedes and is supplied for replacement of 412607, 412608 and 415921N2.*	4	4	4					
43	4156	415922N1	DEFLECTOR ASSEMBLY—Cylinder air (metal) (between cylinders No. 5-6)..... *415922N1 supersedes and is supplied for replacement of 412678.*	1	–	1					
43	4158	417314N1	DEFLECTOR ASSEMBLY—Cylinder air (metal) (between cylinders No. 5-6)..... *417314N1 supersedes and is supplied for replacement of 414326.*	–	1	–					

A Used for engines 41296, 41418, 41442, 41443, 41469 to 41486, 41489, 41496, 41505, 41510 to 41514, 44231 to 44241, 44296 to 44307, 45545 to 45549, 45560, 152629 to 152667, 152772 to 152787, 152802 to 152805, 152810 to 152817, 152824 to 152839, 152842 to 152853, 152944 to 153005 and 153076 to 153085.

B Used for engines 41297, 41298, 41487, 41488, 41490 to 41495, 41497 to 41504 and 41506.

C Used for engines 153006 to 153075.

(-71)

Fig. No.	Index Number	Part Number	Nomenclature 1 2 3 4 5 6 7	Quantity Used: Per Engine A	B	C	Per Assembly: 415921N1	417313N1	415921N3	415922N1	417314N1	417312N1	417308N1	418094N2	418094N3	418094N1	412606	412607	412608	412678	414323	414324	414325	414326	415921N2
43	4160	417312N1	DEFLECTOR ASSEMBLY—Cylinder air (metal) (between cylinders No. 8-9)..... *417312N1 supersedes and is supplied for replacement of 414324.*	–	1	–																			
43	4162	417308N1	DEFLECTOR ASSEMBLY—Cylinder air (metal) (between cylinders No. 9-1)..... *417308N1 supersedes and is supplied for replacement of 414323.*	–	1	–																			
		@ 418094N2	DEFLECTOR ASSEMBLY—Cylinder air (plastic) (between cylinders No. 1-2, 6-7 and 9-1)..... *Superseded by 415921N1.*	–	–	3																			
		418094N3	DEFLECTOR ASSEMBLY—Cylinder air (plastic) (between cylinders No. 2-3 and 8-9).....	–	–	2																			
		@ 418094N1	DEFLECTOR ASSEMBLY—Cylinder air (plastic) (between cylinders No. 3-4, 4-5 and 7-8)..... *Superseded by 415921N1.*	–	–	3																			
		415201	PLATE AND BOLT ASSEMBLY—Cylinder air deflector upper clamp.....	9	9	9	1	1	1	1	1	1	1	1	1	1	1	1	1	1	1	1	1	1	1
		* 112814	PLATE—Cylinder air deflector upper clamp....	9	9	9	1	1	1	1	1	1	1	1	1	1	1	1	1	1	1	1	1	1	1
		* 2070D29	BOLT—Cylinder air deflector upper clamp plate	9	9	9	1	1	1	1	1	1	1	1	1	1	1	1	1	1	1	1	1	1	1
		27D130	WASHER—Cylinder air deflector upper clamp plate to deflector.....	27	27	27	3	3	3	3	3	3	3	–	–	–	3	3	3	3	3	3	3	3	3
		66D19	RIVET—Cylinder air deflector upper clamp plate to deflector (.125 in. x .250 in.).....	27	27	27	3	3	3	3	3	3	3	–	–	–	3	3	3	3	3	3	3	3	3
		66D61	RIVET—Cylinder air deflector upper clamp plate to deflector (.125 in. x .281 in.).....	–	–	24	–	–	–	–	–	–	–	3	3	3	–	–	–	–	–	–	–	–	–
		420699	CLAMP ASSEMBLY—Cylinder air deflector air blast tube..... *420699 supersedes and is supplied for replacement of 65923.*	2	2	2	–	–	1	–	–	1	–	–	1	–	1	–	–	–	–	1	–	–	–
		* 65923	CLAMP—Cylinder air deflector air blast tube...	2	2	2	–	–	1	–	–	1	–	–	1	–	1	–	–	–	–	1	–	–	–
		* 118422	LUG—Cylinder air deflector air blast tube clamp	2	2	2	–	–	1	–	–	1	–	–	1	–	1	–	–	–	–	1	–	–	–

A *Used for engines 41296, 41418, 41442, 41443, 41469 to 41486, 41489, 41496, 41505, 41510 to 41514, 44231 to 44241, 44296 to 44307, 45545 to 45549, 45560, 152629 to 152667, 152772 to 152787, 152802 to 152805, 152810 to 152817, 152824 to 152839, 152842 to 152853, 152944 to 153005 and 153076 to 153035.*

B *Used for engines 41297, 41298, 41487, 41488, 41490 to 41495, 41497 to 41504 and 41506.*

C *Used for engines 153006 to 153075.*

(-71)

Fig. No.	Index Number	Part Number	Nomenclature 1 2 3 4 5 6 7	Quantity Used: Per Engine A	B	C	Per Assembly: 41151-N11	41157-N11	41159-N13	41159-N21	41159-N41	41159-N11	41159-N81	41159-N12	41159-N23	41159-N41	41160-N11	41160-N21	41160-N61	41160-N71	41160-N81	41162-N23	41162-N24	41162-N25	41162-N26	41162-N21
		127322	RING—Cylinder air deflector air blast tube hole reinforcing	–	–	2	–	–	–	–	–	–	–	–	1	–	–	–	–	–	–	–	–	–	–	–
		65924	PLUG—Cylinder air deflector air blast tube clamp	2	2	2	–	–	1	–	–	1	–	–	1	–	1	–	–	–	–	1	–	–	–	–
		3D10	BOLT—Cylinder air deflector air blast tube clamp	2	2	2	–	–	1	–	–	1	–	–	1	–	1	–	–	–	–	1	–	–	–	–
		34D51	WASHER—Cylinder air deflector air blast tube clamp	2	2	2	–	–	1	–	–	1	–	–	1	–	1	–	–	–	–	1	–	–	–	–
		2D1	NUT—Cylinder air deflector air blast tube clamp	2	2	2	–	–	1	–	–	1	–	–	1	–	1	–	–	–	–	1	–	–	–	–
		356-428	PALNUT—Cylinder air deflector air blast tube clamp nut (Wright Part No. 2000D1)	2	2	2	–	–	1	–	–	1	–	–	1	–	1	–	–	–	–	1	–	–	–	–
		27D130	WASHER—Cylinder air deflector air blast tube clamp to deflector	8	8	–	–	–	4	–	–	4	–	–	–	–	4	–	–	–	–	4	–	–	–	–
		66D19	RIVET—Cylinder air deflector air blast tube clamp to deflector (.125 in. x .250 in.)	8	8	–	–	–	4	–	–	4	–	–	–	–	4	–	–	–	–	4	–	–	–	–
		66D25	RIVET—Cylinder air deflector air blast tube clamp to deflector (.125 in. x .313 in.)	–	–	8	–	–	–	–	–	–	–	–	4	–	–	–	–	–	–	–	–	–	–	–
	*	113622	DEFLECTOR—Cylinder air	8	5	6	1	–	1	–	–	–	–	–	–	–	–	–	–	–	–	–	–	–	–	1
	*	115303	DEFLECTOR—Cylinder air	–	–	1	–	1	–	–	–	–	–	–	–	–	–	–	–	–	–	–	–	–	–	–
	*	113621	DEFLECTOR—Cylinder air	1	–	1	–	–	–	1	–	–	–	–	–	–	–	–	–	–	–	–	–	–	–	–
	*	115301	DEFLECTOR—Cylinder air	–	1	–	–	–	–	–	1	–	–	–	–	–	–	–	–	–	–	–	–	–	–	–
	*	115305	DEFLECTOR—Cylinder air	–	1	–	–	–	–	–	–	1	–	–	–	–	–	–	–	–	–	–	–	–	–	–
	*	115308	DEFLECTOR—Cylinder air	–	1	–	–	–	–	–	–	–	1	–	–	–	–	–	–	–	–	–	–	–	–	–
	*	116743N2	DEFLECTOR—Cylinder air	–	–	3	–	–	–	–	–	–	–	1	–	–	–	–	–	–	–	–	–	–	–	–
	*	116743N3	DEFLECTOR—Cylinder air	–	–	2	–	–	–	–	–	–	–	–	1	–	–	–	–	–	–	–	–	–	–	–
	*	116743N1	DEFLECTOR—Cylinder air	–	–	3	–	–	–	–	–	–	–	–	–	1	–	–	–	–	–	–	–	–	–	–	–
	*	69477	DEFLECTOR—Cylinder air	6	4	–	–	–	–	–	–	–	–	–	–	–	1	1	1	–	–	–	–	–	–	–
	*	69546	DEFLECTOR—Cylinder air	1	–	–	–	–	–	–	–	–	–	–	–	–	–	–	–	1	–	–	–	–	–	–
	*	111891	DEFLECTOR—Cylinder air	–	1	–	–	–	–	–	–	–	–	–	–	–	–	–	–	–	1	–	–	–	–	–
	*	111892	DEFLECTOR—Cylinder air	–	1	–	–	–	–	–	–	–	–	–	–	–	–	–	–	–	–	1	–	–	–	–
	*	111893	DEFLECTOR—Cylinder air	–	1	–	–	–	–	–	–	–	–	–	–	–	–	–	–	–	–	–	1	–	–	–
	*	111890	DEFLECTOR—Cylinder air	–	1	–	–	–	–	–	–	–	–	–	–	–	–	–	–	–	–	–	–	1	–	–
		116472	PLATE—Cylinder air deflector clamp spring *116472 supersedes and is supplied for replacement of 113510.*	18	18	18	2	2	2	2	2	2	2	2	2	2	2	2	2	2	2	2	2	2	2	2

A Used for engines 41296, 41418, 41442, 41443, 41469 to 41486, 41489, 41496, 41505, 41510 to 41514, 44231 to 44241, 44296 to 44307, 45545 to 45549, 45560, 152629 to 152667, 152772 to 152787, 152802 to 152805, 152810 to 152817, 152824 to 152839, 152842 to 152853, 152944 to 153005 and 153076 to 153085.

B Used for engines 41297, 41298, 41487, 41488, 41490 to 41495, 41497 to 41504 and 41506.

C Used for engines 153006 to 153075.

(-71)

Fig. No.	Index Number	Part Number	Nomenclature 1 2 3 4 5 6 7	Quantity Used: Per Engine A	B	C	Per Assembly: 41592 1N1	41731 3N1	41592 1N3	41592 2N1	41731 4N1	41731 2N1	41730 8N1	41809 4N2	41809 4N3	41809 4N1	41260 6	41260 7	41260 8	41260 7 8	41432 3	41432 4	41432 5	41432 6	41592 1N2
		27D130	WASHER—Cylinder air deflector clamp spring plate to deflector	36	36	24	4	4	4	4	4	4	4	–	–	–	4	4	4	4	4	4	4	4	4
		66D19	RIVET—Cylinder air deflector clamp spring plate to deflector (.125 in. x .250 in.)	36	36	24	4	4	4	4	4	4	4	–	–	–	4	4	4	4	4	4	4	4	4
			66D19 supersedes 66D25 at this location.																						
		66D61	RIVET—Cylinder air deflector clamp spring plate to deflector (.125 in. x .281 in.)	–	–	32	–	–	–	–	–	–	–	4	4	4	–	–	–	–	–	–	–	–	–
		69524	STRAP—Cylinder air deflector buffer (7.50 in. long)	16	16	–	–	–	–	–	–	–	–	–	–	–	2	2	2	–	2	2	2	–	–
		69545	STRAP—Cylinder air deflector buffer (14.50 in. long)	1	1	–	–	–	–	–	–	–	–	–	–	–	–	–	–	1	–	–	–	1	–
		27D130	WASHER—Cylinder air deflector buffer strap to deflector	34	34	–	–	–	–	–	–	–	–	–	–	–	4	4	4	2	4	4	4	2	–
		AN515-6-8	SCREW—Cylinder air deflector buffer strap to deflector (Wright Part No. 15D5)	34	34	–	–	–	–	–	–	–	–	–	–	–	4	4	4	2	4	4	4	2	–
		27D183	WASHER—Cylinder air deflector buffer strap to deflector (at nut end)	34	34	–	–	–	–	–	–	–	–	–	–	–	4	4	4	2	4	4	4	2	–
		2087D1	NUT—Cylinder air deflector buffer strap to deflector	34	34	–	–	–	–	–	–	–	–	–	–	–	4	4	4	2	4	4	4	2	–
		112883	BUTTON—Cylinder air deflector buffer	52	52	52	6	6	6	4	4	6	6	6	6	6	–	–	–	–	–	–	–	–	6
		113394	GROMMET AND PAD—Cylinder air deflector cylinder barrel	–	–	8	–	–	–	–	–	–	–	1	1	1	–	–	–	–	–	–	–	–	–
		68837	CLAMP—Cylinder air deflector lower	8	8	8	1	1	1	–	–	1	1	1	1	1	1	1	1	–	1	1	1	–	1
		68840	PLATE—Cylinder air deflector lower clamp	8	8	8	1	1	1	–	–	1	1	1	1	1	1	1	1	–	1	1	1	–	1
		127549	SPACER—Cylinder air deflector lower clamp and plate	–	–	8	–	–	–	–	–	–	–	1	1	1	–	–	–	–	–	–	–	–	–
		27D130	WASHER—Cylinder air deflector lower clamp to deflector	32	32	24	4	4	4	–	–	4	4	–	–	–	4	4	4	–	4	4	4	–	4
		66D19	RIVET—Cylinder air deflector lower clamp to deflector (.125 in. x .250 in.)	32	32	24	4	4	4	–	–	4	4	–	–	–	4	4	4	–	4	4	4	–	4
		66D60	RIVET—Cylinder air deflector lower clamp to deflector (.125 in. x .218 in.)	–	–	32	–	–	–	–	–	–	–	4	4	4	–	–	–	–	–	–	–	–	–
		66D56	RIVET—Cylinder air deflector lower clamp and plate to deflector (.125 in. x .280 in.)	16	16	12	2	2	2	–	–	2	2	–	–	–	2	2	2	–	2	2	2	–	2

A *Used for engines 41296, 41418, 41442, 41443, 41469 to 41486, 41489, 41496, 41505, 41510 to 41514, 44231 to 44241, 44296 to 44307, 45545 to 45549, 45560, 152629 to 152667, 152772 to 152787, 152802 to 152805, 152810 to 152817, 152824 to 152839, 152842 to 152853, 152944 to 153005 and 153076 to 153085.*

B *Used for engines 41297, 41298, 41487, 41488, 41490 to 41495, 41497 to 41504 and 41506.*

C *Used for engines 153006 to 153075.*

(-71)

Fig. No.	Index Number	Part Number	Nomenclature 1 2 3 4 5 6 7	Per Engine A	Per Engine B	Per Engine C	Quantity Used Per Assembly 41592 1N1	41731 3N1	41592 1N3	41592 2N1	41731 4N1	41731 2N1	41730 8N1	41809 4N2	41809 4N3	41809 4N1	41260 6	41260 7	41260 8	41267 8	41432 3	41432 4	41432 5	41432 6	41592 1N2
		66D25	RIVET—Cylinder air deflector lower clamp and plate to deflector (.125 in. x .313 in.)	–	–	16	–	–	–	–	–	–	–	2	2	2	–	–	–	–	–	–	–	–	–
		69525	COVER—Cylinder air deflector magneto conduit substituting	8	6	5	1	–	1	–	–	1	–	–	1	1	1	1	–	–	–	1	–	–	–
		27D130	WASHER—Cylinder air deflector magneto conduit substituting cover to deflector	24	18	15	3	–	3	–	–	3	–	–	3	3	3	3	–	–	–	3	–	–	–
		AN515-6-8	SCREW—Cylinder air deflector magneto conduit substituting cover to deflector (Wright Part No. 15D5)	24	18	15	3	–	3	–	–	3	–	–	3	3	3	3	–	–	–	3	–	–	–
		2087D1	NUT—Cylinder air deflector magneto conduit substituting cover to deflector	24	18	15	3	–	3	–	–	3	–	–	3	3	3	3	–	–	–	3	–	–	–

CYLINDER AIR DEFLECTOR ATTACHING PARTS

Fig. No.	Index Number	Part Number	Nomenclature	A	B	C
43	4164	90D13	SCREW—Cylinder air deflector to oil sump	2	2	2
43	4166	27D111	WASHER—Cylinder air deflector to oil sump *27D111 supersedes and is supplied for replacement of 27D4 installed on early engines.*	2	2	2
43	4168	68839	GROMMET—Cylinder air deflector upper clamp	9	9	9
43	4170	68842	PLATE—Cylinder air deflector upper clamp grommet	9	9	9
43	4172	4040D5	NUT—Cylinder air deflector upper grommet and clamp plate *4040D5 supersedes 2087D5.*	9	9	9
43	4174	113509	SPRING—Cylinder air deflector upper clamp plate	9	9	9
43	4176	68838	CLAMP—Cylinder air deflector lower, front	8	8	8
43	4178	45D29	BOLT—Cylinder air deflector lower clamp	8	8	8
43	4180	68884	SPACER—Cylinder air deflector lower clamp	8	8	8
43	4182	4040D5	NUT—Cylinder air deflector lower clamp *4040D5 supersedes 2087D5.*	8	8	8

A Used for engines 41296, 41418, 41442, 41443, 41469 to 41486, 41489, 41496, 41505, 41510 to 41514, 44231 to 44241, 44296 to 44307, 45545 to 45549, 45560, 152629 to 152667, 152772 to 152787, 152802 to 152805, 152810 to 152817, 152824 to 152839, 152842 to 152853, 152944 to 153005 and 153076 to 153085.

B Used for engines 41297, 41298, 41487, 41488, 41490 to 41495, 41497 to 41504 and 41506.

C Used for engines 153006 to 153075.

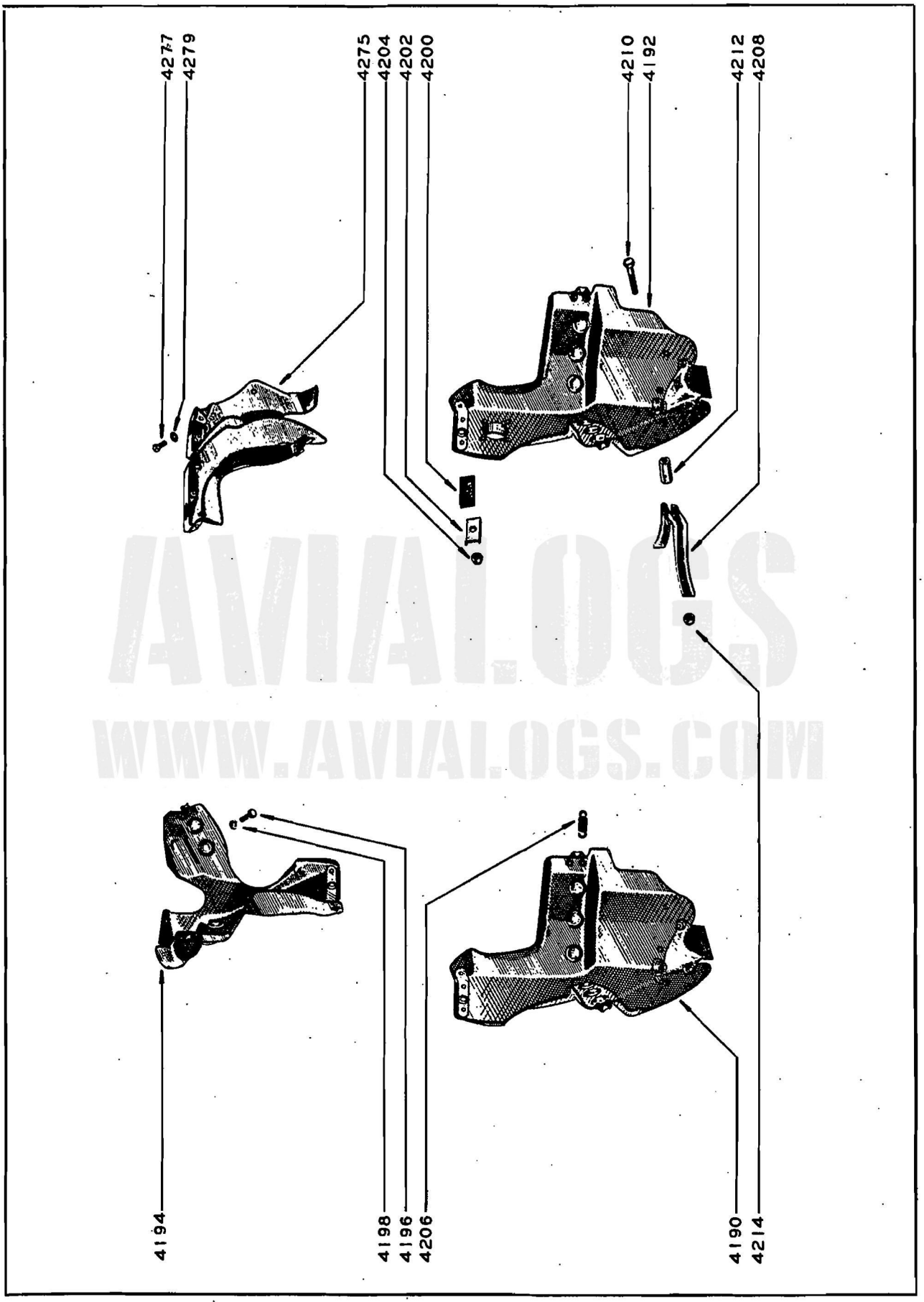

Numbers shown are index numbers and are numerically arranged in the Group Assembly Parts List

Figure 44—Inter-Cylinder and Cylinder Head Air Deflectors (R1820-87)

AVIALOGS
WWW.AVIALOGS.COM

INTER-CYLINDER AIR DEFLECTORS (-87)

Fig. No.	Index Number	Part Number	Nomenclature	Per Engine A	Per Engine B	Quantity Used Per Assembly 415921N1	415921N3	415922N1	418094N2	418094N3	418094N1	418202N1	418094N1	418094N2	415201	112814	2070D29
44	4190	415921N1	DEFLECTOR ASSEMBLY—Cylinder air (metal) (between cylinders No. 1-2, 3-4, 4-5, 6-7, 7-8 and 9-1) *415921N1 supersedes and is supplied for replacement of 412607, 412608 and 415921N2.*	6	6												
44	4192	415921N3	DEFLECTOR ASSEMBLY—Cylinder air (metal) (between cylinders No. 2-3 and 8-9) *415921N3 supersedes and is supplied for replacement of 412606.*	2	–												
44	4194	415922N1	DEFLECTOR ASSEMBLY—Cylinder air (metal) (between cylinders No. 5-6) *415922N1 supersedes and is supplied for replacement of 412678.*	1	1												
		@ 418094N2	DEFLECTOR ASSEMBLY—Cylinder air (plastic) (between cylinders No. 1-2, 6-7 and 9-1) *Superseded by 415921N1.*	–	3												
		418094N3	DEFLECTOR ASSEMBLY—Cylinder air (plastic) (between cylinders No. 2-3 and 8-9)	–	2												
		@ 418094N1	DEFLECTOR ASSEMBLY—Cylinder air (plastic) (between cylinders No. 3-4 and 4-5) *Superseded by 415921N1.*	–	2												
		@ 418202N1	DEFLECTOR ASSEMBLY—Cylinder air (plastic) (between cylinders No. 5-6) *Superseded by 415922N1.*	–	1												
		@ 418094N1	DEFLECTOR ASSEMBLY—Cylinder air (plastic) (between cylinders No. 7-8) *Used on the following engines: 47457 to 47466, 80356 to 80360, 87385 to 87532, 87602 to 87857, 88098 to 88167, 94035 to 94527, 94568 to 94577, 152491 to 152541, 152822, 152823, 153086 to 153105, 183060 to 183085, 183112 to 183146, 189949 to 189979.* *Superseded by 415921N1.*	–	1												
		@ 418094N2	DEFLECTOR ASSEMBLY—Cylinder air (plastic) (between cylinders No. 7-8) *Used on the following engines: 152542 to 152555, 153106 to 153210, 183086 to 183111, 189980 to 190063.* *Superseded by 415921N1.*	–	1												
		415201	PLATE AND BOLT ASSEMBLY—Cylinder air deflector upper clamp	9	9	1	1	1	1	1	1	1	1	1	1	1	1
		* 112814	PLATE—Cylinder air deflector upper clamp	9	9	1	1	1	1	1	1	1	1	1	1	1	1
		* 2070D29	BOLT—Cylinder air deflector upper clamp plate	9	9	1	1	1	1	1	1	1	1	1	1	1	1

A Used for engines 73155 to 73228, 73280 to 73303, 79867 to 80136, 80302 to 80355, 86997 to 87384, 87546 to 87601, 93880 to 94034 and 152821.

B Used for engines 47457 to 47466, 80356 to 80360, 87385 to 87532, 87602 to 87857, 88098 to 88167, 94035 to 94527, 94568 to 94577, 152491 to 152555, 152822, 152823, 153086 to 153210, 183060 to 183146 and 189949 to 190065.

(-87)

Fig. No.	Index Number	Part Number	1	2	3	4	5	6	7	Nomenclature	Per Engine A	Per Engine B	Quantity Used Per Assembly 4115926 1N1	4115926 1N3	4115926 1N1	4118026 2N2	4118026 2N3	4118026 2N1	4118026 2N1	4122606	4122606	4122606	4122607	4115926 1N2
		27D130								WASHER—Cylinder air deflector upper clamp plate to deflector	27	21	3	3	3	–	–	–	–	3	3	3	3	3
		66D19								RIVET—Cylinder air deflector upper clamp plate to deflector (.125 in. x .250 in.)	27	21	3	3	3	–	–	–	–	3	3	3	3	3
		66D61								RIVET—Cylinder air deflector upper clamp plate to deflector (.125 in. x .281 in.)	–	27	–	–	–	3	3	3	3	–	–	–	–	–
		420699								CLAMP ASSEMBLY—Cylinder air deflector air blast tube	2	2	–	1	–	–	1	–	–	1	–	–	–	–
										420699 supersedes and is supplied for replacement of 65923.														
	*	65923								CLAMP—Cylinder air deflector air blast tube	2	2	–	1	–	–	1	–	–	1	–	–	–	–
	*	118422								LUG—Cylinder air deflector air blast tube clamp	2	2	–	1	–	–	1	–	–	1	–	–	–	–
		127322								RING—Cylinder air deflector air blast tube hole reinforcing	–	2	–	–	–	–	1	–	–	–	–	–	–	–
		65924								PLUG—Cylinder air deflector air blast tube clamp	2	2	–	1	–	–	1	–	–	1	–	–	–	–
		3D10								BOLT—Cylinder air deflector air blast tube clamp	2	2	–	1	–	–	1	–	–	1	–	–	–	–
		34D51								WASHER—Cylinder air deflector air blast tube clamp	2	2	–	1	–	–	1	–	–	1	–	–	–	–
		2D1								NUT—Cylinder air deflector air blast tube clamp	2	2	–	1	–	–	1	–	–	1	–	–	–	–
		356-428								PALNUT—Cylinder air deflector air blast tube clamp nut (Wright Part No. 2000D1)	2	2	–	1	–	–	1	–	–	1	–	–	–	–
		27D130								WASHER—Cylinder air deflector air blast tube clamp to deflector	8	–	–	4	–	–	–	–	–	4	–	–	–	–
		66D19								RIVET—Cylinder air deflector air blast tube clamp to deflector (.125 in. x .250 in.)	8	–	–	4	–	–	–	–	–	4	–	–	–	–
		66D25								RIVET—Cylinder air deflector air blast tube clamp to deflector (.125 in. x .313 in.)	–	8	–	–	–	–	4	–	–	–	–	–	–	–
	*	113622								DEFLECTOR—Cylinder air	8	6	1	1	–	–	–	–	–	–	–	–	–	1
	*	113621								DEFLECTOR—Cylinder air	1	1	–	–	1	–	–	–	–	–	–	–	–	–
	*	116743N2								DEFLECTOR—Cylinder air	–	6	–	–	–	1	–	–	–	–	–	–	–	–
	*	116743N3								DEFLECTOR—Cylinder air	–	2	–	–	–	–	1	–	–	–	–	–	–	–
	*	116743N1								DEFLECTOR—Cylinder air	–	6	–	–	–	–	–	1	–	–	–	–	–	–
	*	116756N1								DEFLECTOR—Cylinder air	–	1	–	–	–	–	–	–	1	–	–	–	–	–
	*	69477								DEFLECTOR—Cylinder air	8	–	–	–	–	–	–	–	–	1	1	1	–	–
	*	69546								DEFLECTOR—Cylinder air	1	–	–	–	–	–	–	–	–	–	–	–	1	–
		116472								PLATE—Cylinder air deflector clamp spring	18	18	2	2	2	2	2	2	2	2	2	2	2	2
										116472 supersedes and is supplied for replacement of 113510.														
		27D130								WASHER—Cylinder air deflector clamp spring plate to deflector	36	28	4	4	4	–	–	–	–	4	4	4	4	4
		66D19								RIVET—Cylinder air deflector clamp spring plate to deflector (.125 in. x .250 in.)	36	28	4	4	4	–	–	–	–	4	4	4	4	4
										66D19 supersedes 66D25 at this location.														
		66D61								RIVET—Cylinder air deflector clamp spring plate to deflector (.125 in. x .281 in.)	–	36	–	–	–	4	4	4	4	–	–	–	–	–
		69524								STRAP—Cylinder air deflector buffer (7.50 in. long)	16	–	–	–	–	–	–	–	–	2	2	2	–	–
		69545								STRAP—Cylinder air deflector buffer (14.50 in. long)	1	–	–	–	–	–	–	–	–	–	–	–	1	–
		27D130								WASHER—Cylinder air deflector buffer strap to deflector	34	–	–	–	–	–	–	–	–	4	4	4	2	–

A Used for engines 73155 to 73228, 73280 to 73303, 79867 to 80136, 80302 to 80355, 86997 to 87384, 87546 to 87601, 93880 to 94034 and 152821.

B Used for engines 47457 to 47466, 80356 to 80360, 87385 to 87532, 87602 to 87857, 88098 to 88167, 94035 to 94527, 94568 to 94577, 152491 to 152555, 152822, 152823, 153086 to 153210, 183060 to 183146 and 189949 to 190065.

(-87)

Fig. No.	Index Number	Part Number	Nomenclature	Quantity Used: Per Engine A	Per Engine B	Per Assembly: 4 1 5 9 2 1 N 1	4 1 5 9 2 1 N 3	4 1 5 9 2 2 N 1	4 1 5 8 0 9 4 N 2	4 1 5 8 0 9 4 N 3	4 1 5 8 0 9 4 N 1	4 1 5 8 2 0 2 N 1	4 1 5 2 6 0 6	4 1 5 2 6 0 7	4 1 5 2 6 0 8	4 1 5 2 6 7 8	4 1 5 9 2 1 N 2
		AN515-6-8	SCREW—Cylinder air deflector buffer strap to deflector (Wright Part No. 15D5)	34	–	–	–	–	–	–	–	–	4	4	4	2	–
		27D183	WASHER—Cylinder air deflector buffer strap to deflector (at nut end)	34	–	–	–	–	–	–	–	–	4	4	4	2	–
		2087D1	NUT—Cylinder air deflector buffer strap to deflector	34	–	–	–	–	–	–	–	–	4	4	4	2	–
		112883	BUTTON—Cylinder air deflector buffer	52	52	6	6	4	6	6	6	4	–	–	–	–	6
		113394	GROMMET AND PAD—Cylinder air deflector cylinder barrel	–	9	–	–	–	1	1	1	1	–	–	–	–	–
		68837	CLAMP—Cylinder air deflector lower	8	8	1	1	–	1	1	1	–	1	1	1	–	1
		68840	PLATE—Cylinder air deflector lower clamp	8	8	1	1	–	1	1	1	–	1	1	1	–	1
		127549	SPACER—Cylinder air deflector lower clamp and plate	–	8	–	–	–	1	1	1	–	–	–	–	–	–
		27D130	WASHER—Cylinder air deflector lower clamp to deflector	32	24	4	4	–	–	–	–	–	4	4	4	–	4
		66D19	RIVET—Cylinder air deflector lower clamp to deflector (.125 in. x .250 in.)	32	24	4	4	–	–	–	–	–	4	4	4	–	4
		66D60	RIVET—Cylinder air deflector lower clamp to deflector (.125 in. x .218 in.)	–	32	–	–	–	4	4	4	–	–	–	–	–	–
		66D56	RIVET—Cylinder air deflector lower clamp and plate to deflector (.125 in. x .280 in.)	16	12	2	2	–	–	–	–	–	2	2	2	–	2
		66D25	RIVET—Cylinder air deflector lower clamp and plate to deflector (.125 in. x .313 in.)	–	16	–	–	–	2	2	2	–	–	–	–	–	–
		69525	COVER—Cylinder air deflector magneto conduit substituting	8	8	1	1	–	–	1	1	–	1	1	–	–	–
		27D130	WASHER—Cylinder air deflector magneto conduit substituting cover to deflector	24	24	3	3	–	–	3	3	–	3	3	–	–	–
		AN515-6-8	SCREW—Cylinder air deflector magneto conduit substituting cover to deflector (Wright Part No. 15D5)	24	24	3	3	–	–	3	3	–	3	3	–	–	–
		2087D1	NUT—Cylinder air deflector magneto conduit substituting cover to deflector	24	24	3	3	–	–	3	3	–	3	3	–	–	–

CYLINDER AIR DEFLECTOR ATTACHING PARTS

44	4196	90D13	SCREW—Cylinder air deflector to oil sump	2	2
44	4198	27D111	WASHER—Cylinder air deflector to oil sump *27D111 supersedes and is supplied for replacement of 27D4 installed on early engines.*	2	2
44	4200	68839	GROMMET—Cylinder air deflector upper clamp	9	9
44	4202	68842	PLATE—Cylinder air deflector upper clamp grommet	9	9
44	4204	4040D5	NUT—Cylinder air deflector upper grommet and clamp plate *4040D5 supersedes 2087D5.*	9	9

A Used for engines 73155 to 73228, 73280 to 73303, 79867 to 80136, 80302 to 80355, 86997 to 87384, 87546 to 87601, 93880 to 94034 and 152821.

B Used for engines 47457 to 47466, 80356 to 80360, 87385 to 87532, 87602 to 87857, 88098 to 88167, 94035 to 94527, 94568 to 94577, 152491 to 152555, 152822, 152823, 153086 to 153210, 183060 to 183146 and 189949 to 190065.

(-87)

Fig. No.	Index Number	Part Number	Nomenclature 1 2 3 4 5 6 7	Quantity Used: Per Engine A	Quantity Used: Per Engine B	Per Assembly: 415921N1	415921N3	415922N1	418094N2	418094N3	418094N1	418202N1	412606	412607	412608	412678	415921N2
44	4206	113509	SPRING—Cylinder air deflector upper clamp plate	9	9												
44	4208	08838	CLAMP—Cylinder air deflector lower, front	8	8												
44	4210	45D29	BOLT—Cylinder air deflector lower clamp	8	8												
44	4212	68884	SPACER—Cylinder air deflector lower clamp	8	8												
44	4214	4040D5	NUT—Cylinder air deflector lower clamp *4040D5 supersedes 2087D5.*	8	8												

A Used for engines 73155 to 73228, 73280 to 73303, 79867 to 80136, 80302 to 80355, 86997 to 87384, 87546 to 87601, 93880 to 94034 and 152821.

B Used for engines 47457 to 47466, 80356 to 80360, 87385 to 87532, 87602 to 87857, 88098 to 88167, 94035 to 94527, 94568 to 94577, 152491 to 152555, 152822, 152823, 153086 to 153210, 183060 to 183146 and 189949 to 190065.

AVIA.OGS
WWW.AVIA.OGS.COM

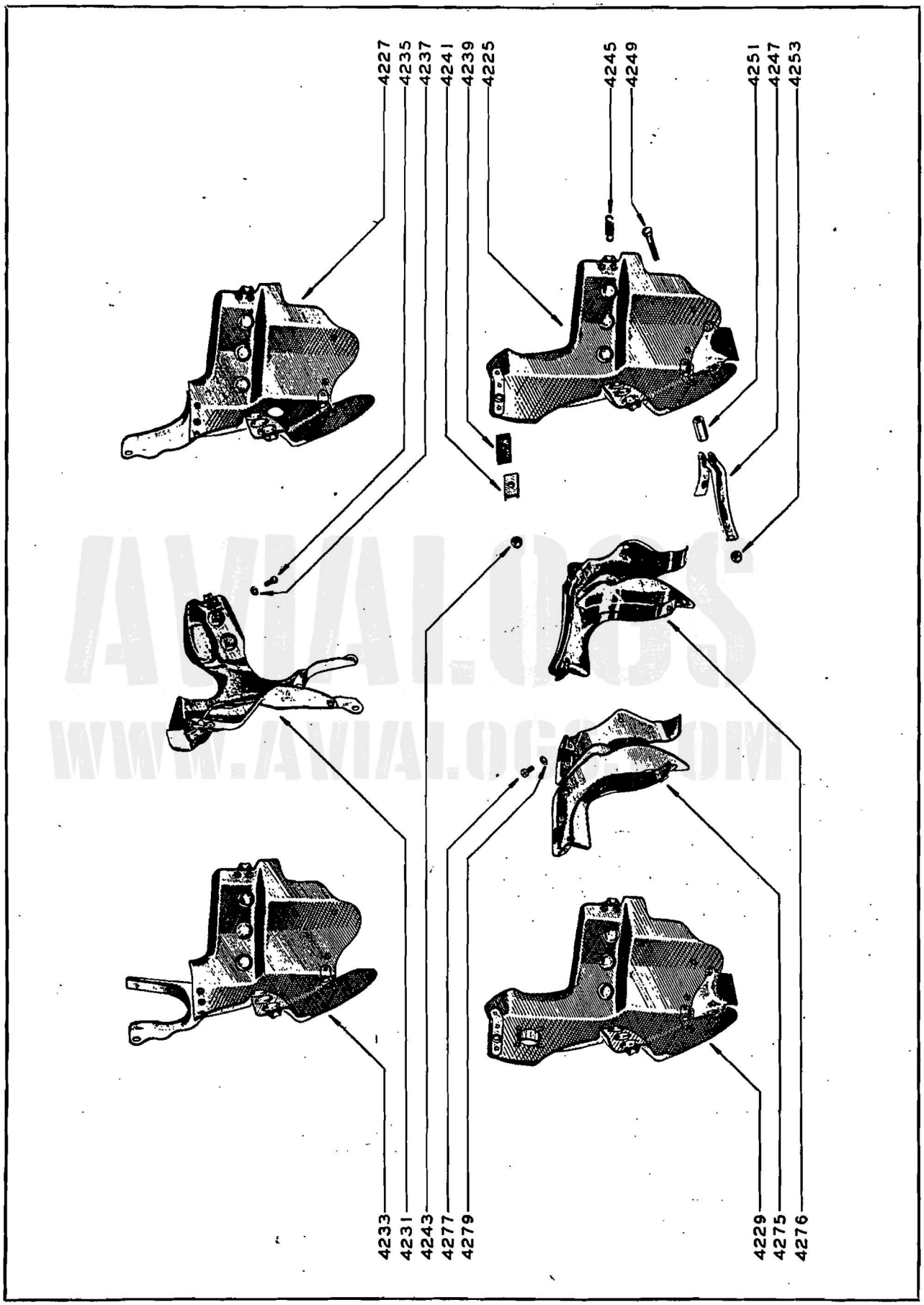

Numbers shown are index numbers and are numerically arranged in the Group Assembly Parts List

Figure 45—Inter-Cylinder and Cylinder Head Air Deflectors (R1820-95)

AVIAL.OGS
WWW.AVIAL.OGS.COM

INTER-CYLINDER AIR DEFLECTORS (-95)

Fig. No.	Index Number	Part Number	Nomenclature 1 2 3 4 5 6 7	Quantity Used: Per Engine A	Per Engine B	Per Assembly: 415921N1	417311N2	415921N3	415922N1	417309N1	417317N1	412606	412607	412608	412678	414313	414846	415921N2
			Except where otherwise noted all of the parts listed in this group are used on all engines.															
45	4225	415921N1	DEFLECTOR ASSEMBLY—Cylinder air. *415921N1 is used between cylinders No. 1–2, 3–4, 4–5, 6–7, 7–8 and 9–1 on A engines; between cylinders No. 3–4, 4–5, 6–7, 7–8 and 8–9 on B engines.* *415921N1 supersedes and is supplied for replacement of 412607, 412608 and 415921N2.*	6	5													
45	4227	417311N2	DEFLECTOR ASSEMBLY—Cylinder air (between cylinders No. 1–2). *417311N2 supersedes and is supplied for replacement of 414846.*	–	1													
45	4229	415921N3	DEFLECTOR ASSEMBLY—Cylinder air. *415921N3 is used between cylinders No. 2–3 and 8–9 on A engines; between cylinders No. 2–3 on B engines.* *415921N3 supersedes and is supplied for replacement of 412606.*	2	1													
		415922N1	DEFLECTOR ASSEMBLY—Cylinder air (between cylinders No. 5–6). *415922N1 supersedes and is supplied for replacement of 412678.*	1	–													
45	4231	417309N1	DEFLECTOR ASSEMBLY—Cylinder air (between cylinders No. 5–6).	–	1													
45	4233	417317N1	DEFLECTOR ASSEMBLY—Cylinder air (between cylinders No. 9–1). *417317N1 supersedes and is supplied for replacement of 414313.*	–	1													
		415201	PLATE AND BOLT ASSEMBLY—Cylinder air deflector upper clamp	9	6	1	–	1	1	–	–	1	1	1	1	–	–	1
		* 112814	PLATE—Cylinder air deflector upper clamp	9	6	1	–	1	1	–	–	1	1	1	1	–	–	1
		* 2070D29	BOLT—Cylinder air deflector upper clamp plate	9	6	1	–	1	1	–	–	1	1	1	1	–	–	1
		27D130	WASHER—Cylinder air deflector upper clamp plate to deflector	27	18	3	–	3	3	–	–	3	3	3	3	–	–	3
		66D19	RIVET—Cylinder air deflector upper clamp plate to deflector	27	18	3	–	3	3	–	–	3	3	3	3	–	–	3
		420699	CLAMP ASSEMBLY—Cylinder air deflector air blast tube. *420699 supersedes and is supplied for replacement of 65923.*	2	1	–	–	1	–	–	–	1	–	–	–	–	–	–
		* 65923	CLAMP—Cylinder air deflector air blast tube	2	1	–	–	1	–	–	–	1	–	–	–	–	–	–
		* 118422	LUG—Cylinder air deflector air blast tube clamp	2	1	–	–	1	–	–	–	1	–	–	–	–	–	–
		65924	PLUG—Cylinder air deflector air blast tube clamp	2	1	–	–	1	–	–	–	1	–	–	–	–	–	–
		3D10	BOLT—Cylinder air deflector air blast tube clamp	2	1	–	–	1	–	–	–	1	–	–	–	–	–	–
		34D51	WASHER—Cylinder air deflector air blast tube clamp	2	1	–	–	1	–	–	–	1	–	–	–	–	–	–
		2D1	NUT—Cylinder air deflector air blast tube clamp	2	1	–	–	1	–	–	–	1	–	–	–	–	–	–
		356-428	PALNUT—Cylinder air deflector air blast tube clamp nut (Wright Part No. 2000D1)	2	1	–	–	1	–	–	–	1	–	–	–	–	–	–
		27D130	WASHER—Cylinder air deflector air blast tube clamp to deflector	8	4	–	–	4	–	–	–	4	–	–	–	–	–	–
		66D19	RIVET—Cylinder air deflector air blast tube clamp to deflector	8	4	–	–	4	–	–	–	4	–	–	–	–	–	–
		* 113622	DEFLECTOR—Cylinder air	8	6	1	–	1	–	–	–	–	–	–	–	–	–	1
		* 115302	DEFLECTOR—Cylinder air	–	2	–	1	–	–	–	1	–	–	–	–	–	–	–
		* 113621	DEFLECTOR—Cylinder air	1	–	–	–	–	1	–	–	–	–	–	–	–	–	–

A Used for engines 31732 and 31733.
B Used for all engines except 31732 and 31733.

(-95)

Fig. No.	Index Number	Part Number	1	2	3	4	5	6	7	Nomenclature	Quantity Used: Per Engine A	Per Engine B	Per Assembly: 4115921 1N1	4117315921 1N2	4115921 1N3	4115921 2N1	4117730 9N1	4117331 7N1	4122606 06	4122606 07	4122606 08	4126637 8	4134313	4144846	4115921 1N2
		* 115300								DEFLECTOR—Cylinder air	–	1	–	–	–	–	1	–	–	–	–	–	–	–	–
		* 69477								DEFLECTOR—Cylinder air	8	6	–	–	–	–	–	–	1	1	1	–	–	–	–
		* 69546								DEFLECTOR—Cylinder air	1	–	–	–	–	–	–	–	–	–	–	1	–	–	–
		* 112007								DEFLECTOR—Cylinder air	–	1	–	–	–	–	–	–	–	–	–	–	1	–	–
		* 112391								DEFLECTOR—Cylinder air	–	1	–	–	–	–	–	–	–	–	–	–	–	1	–
		69485								BRACE—Cylinder air deflector	–	1	–	–	–	–	1	–	–	–	–	–	–	–	–
		112010								BRACE—Cylinder air deflector	–	1	–	–	–	–	–	1	–	–	–	–	1	–	–
		112009								BRACE—Cylinder air deflector	–	1	–	1	–	–	–	–	–	–	–	–	–	1	–
		27D130								WASHER—Cylinder air deflector brace to deflector	–	10	–	3	–	–	4	3	–	–	–	–	4	3	–
		66D19								RIVET—Cylinder air deflector brace to deflector	–	10	–	3	–	–	4	3	–	–	–	–	4	3	–
		116472								PLATE—Cylinder air deflector clamp spring	18	18	2	2	2	2	2	2	2	2	2	2	2	2	2
										116472 supersedes and is supplied for replacement of 113510.															
		27D130								WASHER—Cylinder air deflector clamp spring plate to deflector	36	36	4	4	4	4	4	4	4	4	4	4	4	4	4
		66D19								RIVET—Cylinder air deflector clamp spring plate to deflector	36	36	4	4	4	4	4	4	4	4	4	4	4	4	4
										66D19 supersedes 66D25 at this location.															
		69524								STRAP—Cylinder air deflector buffer (7.50 in. long)	16	16	–	–	–	–	–	–	2	2	2	–	2	2	–
		69545								STRAP—Cylinder air deflector buffer (14.50 in. long)	1	–	–	–	–	–	–	–	–	–	–	1	–	–	–
		27D130								WASHER—Cylinder air deflector buffer strap to deflector	34	32	–	–	–	–	–	–	4	4	4	2	4	4	–
		AN515-6-8								SCREW—Cylinder air deflector buffer strap to deflector (Wright Part No. 15D5)	34	32	–	–	–	–	–	–	4	4	4	2	4	4	–
		27D183								WASHER—Cylinder air deflector buffer strap to deflector (at nut end)	34	32	–	–	–	–	–	–	4	4	4	2	4	4	–
		2087D1								NUT—Cylinder air deflector buffer strap to deflector	34	32	–	–	–	–	–	–	4	4	4	2	4	4	–
		112883								BUTTON—Cylinder air deflector buffer	52	52	6	6	6	4	4	6	–	–	–	–	–	–	6
		68837								CLAMP—Cylinder air deflector lower	8	8	1	1	1	–	–	1	1	1	1	–	1	1	1
		68840								PLATE—Cylinder air deflector lower clamp	8	8	1	1	1	–	–	1	1	1	1	–	1	1	1
		27D130								WASHER—Cylinder air deflector lower clamp to deflector	32	32	4	4	4	–	–	4	4	4	4	–	4	4	4
		66D19								RIVET—Cylinder air deflector lower clamp to deflector	32	32	4	4	4	–	–	4	4	4	4	–	4	4	4
		66D56								RIVET—Cylinder air deflector lower clamp and plate to deflector	16	16	2	2	2	–	–	2	2	2	2	–	2	2	2
		69525								COVER—Cylinder air deflector magneto conduit substituting	8	6	1	–	1	–	–	–	1	1	–	–	–	–	–
		27D130								WASHER—Cylinder air deflector magneto conduit substituting cover to deflector	24	18	3	–	3	–	–	–	3	3	–	–	–	–	–
		AN515-6-8								SCREW—Cylinder air deflector magneto conduit substituting cover to deflector (Wright Part No. 15D5)	24	18	3	–	3	–	–	–	3	3	–	–	–	–	–
		2087D1								NUT—Cylinder air deflector magneto conduit substituting cover to deflector	24	18	3	–	3	–	–	–	3	3	–	–	–	–	–

A Used for engines 31732 and 31733.
B Used for all engines except 31732 and 31733

(-95)

Fig. No.	Index Number	Part Number	Nomenclature	Per Engine A	Per Engine B	Quantity Used Per Assembly 1 2 3 4 5 6 7
			CYLINDER AIR DEFLECTOR ATTACHING PARTS			
45	4235	90D13	SCREW—Cylinder air deflector to oil sump	2	2	
45	4237	27D111	WASHER—Cylinder air deflector to oil sump *27D111 supersedes and is supplied for replacement of 27D4 installed on early engines.*	2	2	
45	4239	68839	GROMMET—Cylinder air deflector upper clamp	9	9	
45	4241	68842	PLATE—Cylinder air deflector upper clamp grommet	9	9	
45	4243	4040D5	NUT—Cylinder air deflector upper grommet and clamp plate *4040D5 supersedes 2087D5.*	9	9	
45	4245	113509	SPRING—Cylinder air deflector upper clamp plate	9	9	
45	4247	68838	CLAMP—Cylinder air deflector lower, front	8	8	
45	4249	45D29	BOLT—Cylinder air deflector lower clamp	8	8	
45	4251	68884	SPACER—Cylinder air deflector lower clamp	8	8	
45	4253	4040D5	NUT—Cylinder air deflector lower clamp *4040D5 supersedes 2087D5.*	8	8	

1	2	3	4	5	6	7
4	4	4	4	4	4	4
1	1	1	1	1	1	1
5	7	5	5	7	7	2
9	3	9	9	3	3	6
2	1	2	2	0	1	0
1	1	1	2	9	7	6
N	N	N	N	N	N	
1	2	3	1	1	1	

1	2	3	4	5	6	7
4	4	4	4	4	4	4
1	1	1	1	1	1	1
2	2	2	4	4	4	5
6	6	6	3	8	8	9
0	0	7	1	4	6	2
7	8	8	3			1
						N
						2

A Used for engines 31732 and 31733.
B Used for all engines except 31732 and 31733

Fig. No.	Index Number	Part Number	Nomenclature 1 2 3 4 5 6 7	Units Per Assy—Model R1820 -40	-40B	-54	-60	-65	-71	-73	-87	-95	-97
			INTER-CYLINDER AIR DEFLECTORS (-40B, -54 AND -60) (BETWEEN CYLINDERS NO. 2-3 AND 8-9)										
			Except where otherwise noted all of the parts listed in this group are used on all -40B and -60 engines and all -54 engines except 86728 to 86737.										
		@ 416211	DEFLECTOR AND EXTENSION ASSEMBLY—Cylinder air.....	–	2	–	–	–	–	–	–	–	–
			Factory installed on all -40B engines. For replacement, make the following substitutions:										
			Use 420586N1 — Description: *Deflector and Extension Assembly — Cylinder air* — Remove: 416211 — Quant. 1										
			420368 — *Scoop Assembly — Cylinder air deflector* — 416214 — 1										
		* 416213	DEFLECTOR ASSEMBLY—Cylinder air.....	–	1	–	–	–	–	–	–	–	–
		415201	PLATE AND BOLT ASSEMBLY—Cylinder air deflector upper clamp.....	–	1	–	–	–	–	–	–	–	–
		* 112814	PLATE—Cylinder air deflector upper clamp.....	–	1	–	–	–	–	–	–	–	–
		* 2070D29	BOLT—Cylinder air deflector upper clamp plate.....	–	1	–	–	–	–	–	–	–	–
		416222	COVER ASSEMBLY—Cylinder air deflector magneto conduit substituting.....	–	1	–	–	–	–	–	–	–	–
		* 113990	COVER—Cylinder air deflector magneto conduit substituting.....	–	1	–	–	–	–	–	–	–	–
		* 113991	PAD—Cylinder air deflector magneto conduit substituting cover.....	–	1	–	–	–	–	–	–	–	–
		66D47	RIVET—Cylinder air deflector magneto conduit substituting cover pad to cover	–	2	–	–	–	–	–	–	–	–
		27D183	WASHER—Cylinder air deflector magneto conduit substituting cover pad to cover.....	–	2	–	–	–	–	–	–	–	–
		* 113989	DEFLECTOR—Cylinder air.....	–	1	–	–	–	–	–	–	–	–
		66D19	RIVET—Cylinder air deflector upper clamp plate to deflector..	–	3	–	–	–	–	–	–	–	–
		27D130	WASHER—Cylinder air deflector upper clamp plate to deflector	–	3	–	–	–	–	–	–	–	–
		AN515-6-8	SCREW—Cylinder air deflector magneto conduit substituting cover to deflector (Wright Part No. 15D5).....	–	3	–	–	–	–	–	–	–	–
		2087D1	NUT—Cylinder air deflector magneto conduit substituting cover to deflector.....	–	3	–	–	–	–	–	–	–	–
		27D130	WASHER—Cylinder air deflector magneto conduit substituting cover to deflector.....	–	3	–	–	–	–	–	–	–	–
		68837	CLAMP—Cylinder air deflector lower.....	–	1	–	–	–	–	–	–	–	–
		68840	PLATE—Cylinder air deflector lower clamp.....	–	1	–	–	–	–	–	–	–	–

AVIATIONS WWW.AVIATIONS.COM

Fig. No.	Index Number	Part Number	Nomenclature 1 2 3 4 5 6 7	Units Per Assy—Model R1820 -40	-40B	-54	-60	-65	-71	-73	-87	-95	-97
		66D19	RIVET—Cylinder air deflector lower clamp to deflector.....	–	4	–	–	–	–	–	–	–	–
		27D130	WASHER—Cylinder air deflector lower clamp to deflector.....	–	4	–	–	–	–	–	–	–	–
		66D56	RIVET—Cylinder air deflector lower clamp and plate to deflector.....	–	2	–	–	–	–	–	–	–	–
		116472	PLATE—Cylinder air deflector clamp spring.....	–	2	–	–	–	–	–	–	–	–
		66D19	RIVET—Cylinder air deflector clamp spring plate to deflector.....	–	4	–	–	–	–	–	–	–	–
		27D130	WASHER—Cylinder air deflector clamp spring plate to deflector	–	4	–	–	–	–	–	–	–	–
		112883	BUTTON—Cylinder air deflector buffer.....	–	4	–	–	–	–	–	–	–	–
		* 416212	EXTENSION ASSEMBLY—Cylinder air deflector.....	–	1	–	–	–	–	–	–	–	–
		416224	BRACKET ASSEMBLY—Cylinder deflector extension to duct, upper.....	–	1	–	–	–	–	–	–	–	–
		* 113992	BRACKET—Cylinder air deflector extension to duct, upper.....	–	1	–	–	–	–	–	–	–	–
		S5-200	SPRING—Cylinder air deflector extension to duct upper bracket (Dzus Fastener Company Incorporated) (Wright Part No. 2112D1).....	–	1	–	–	–	–	–	–	–	–
		66D53	RIVET—Cylinder air deflector extension to duct upper bracket spring.....	–	2	–	–	–	–	–	–	–	–
		416220	BRACKET ASSEMBLY—Cylinder air deflector extension to duct, lower.....	–	2	–	–	–	–	–	–	–	–
		* 113994	BRACKET—Cylinder air deflector extension to duct, lower.....	–	1	–	–	–	–	–	–	–	–
		S5-200	SPRING—Cylinder air deflector extension to duct lower bracket (Dzus Fastener Company Incorporated) (Wright Part No. 2112D1).....	–	1	–	–	–	–	–	–	–	–
		66D53	RIVET—Cylinder air deflector extension to duct lower bracket spring.....	–	2	–	–	–	–	–	–	–	–
		416218	BRACKET ASSEMBLY—Cylinder air deflector extension, upper.	–	1	–	–	–	–	–	–	–	–
		* 114002	BRACKET—Cylinder air deflector extension, upper RH.....	–	1	–	–	–	–	–	–	–	–
		* 114003	BRACKET—Cylinder air deflector extension, upper LH.....	–	1	–	–	–	–	–	–	–	–
		* 6D44	BOLT—Cylinder air deflector extension upper bracket.	–	1	–	–	–	–	–	–	–	–
		AN430AD4-4	RIVET—Cylinder air deflector extension upper bracket (Wright Part No. 66D51)	–	4	–	–	–	–	–	–	–	–
		416219	BRACKET ASSEMBLY—Cylinder air deflector extension, lower	–	1	–	–	–	–	–	–	–	–
		* 114000	BRACKET—Cylinder air deflector extension, lower RH.....	–	1	–	–	–	–	–	–	–	–
		* 114001	BRACKET—Cylinder air deflector extension, lower LH.....	–	1	–	–	–	–	–	–	–	–

AVIATIONS
WWW.AVIATIONS.COM

Fig. No.	Index Number	Part Number	Nomenclature 1 2 3 4 5 6 7	Units Per Assy—Model R1820 -40	-40B	-54	-60	-65	-71	-73	-87	-95	-97
		* 6D44	BOLT—Cylinder air deflector extension lower bracket	– 1	–	–	–	–	–	–	–	–	–
		* AN430AD4-4	RIVET—Cylinder air deflector extension lower bracket (Wright Part No. 66D51)	– 4	–	–	–	–	–	–	–	–	–
		* 114004	EXTENSION—Cylinder air deflector, RH	– 1	–	–	–	–	–	–	–	–	–
		* 114005	EXTENSION—Cylinder air deflector, LH	– 1	–	–	–	–	–	–	–	–	–
		66D39	RIVET—Cylinder air deflector, RH to LH extension	– 8	–	–	–	–	–	–	–	–	–
		AN430AD4-4	RIVET—Cylinder air deflector extension upper and lower bracket (Wright Part No. 66D51)	– 16	–	–	–	–	–	–	–	–	–
		27D130	WASHER—Cylinder air deflector extension upper and lower bracket	– 16	–	–	–	–	–	–	–	–	–
		AN430AD4-4	RIVET—Cylinder air deflector extension to duct bracket (Wright Part No. 66D51)	– 14	–	–	–	–	–	–	–	–	–
		113996	SEAL—Cylinder air deflector extension	– 1	–	–	–	–	–	–	–	–	–
		113997	PLATE—Cylinder air deflector extension seal reinforcing	– 1	–	–	–	–	–	–	–	–	–
		66D41	RIVET—Cylinder air deflector extension seal and reinforcing plate to deflector, long	– 1	–	–	–	–	–	–	–	–	–
		66D36	RIVET—Cylinder air deflector extension seal and reinforcing plate to deflector, short	– 4	–	–	–	–	–	–	–	–	–
		66D45	RIVET—Cylinder air deflector extension to deflector	– 27	–	–	–	–	–	–	–	–	–
40, 41	4255	420586N1	DEFLECTOR ASSEMBLY—Cylinder air.. *Factory installed on all -60 engines and on all -54 engines except 86728 to 86737.*	– 2	2	2	–	–	–	–	–	–	–
		* 420684	EXTENSION ASSEMBLY—Cylinder air deflector	– 1	1	1	–	–	–	–	–	–	–
		416224	BRACKET ASSEMBLY—Cylinder air deflector extension to duct, upper	– 1	1	1	–	–	–	–	–	–	–
		* 113992	BRACKET—Cylinder air deflector extension to duct, upper	– 1	1	1	–	–	–	–	–	–	–
		S5-200	SPRING—Cylinder air deflector extension to duct upper bracket (Dzus Fastener Company Incorporated) (Wright Part No. 2112D1)	– 1	1	1	–	–	–	–	–	–	–
		66D53	RIVET—Cylinder air deflector extension to duct upper bracket spring	– 2	2	2	–	–	–	–	–	–	–
		416220	BRACKET ASSEMBLY—Cylinder air deflector extension to duct, lower	– 2	2	2	–	–	–	–	–	–	–
		* 113994	BRACKET—Cylinder air deflector extension to duct, lower	– 1	1	1	–	–	–	–	–	–	–
		S5-200	SPRING—Cylinder air deflector extension to duct lower bracket (Dzus Fastener Company Incorporated) (Wright Part No. 2112D1)	– 1	1	1	–	–	–	–	–	–	–
		66D53	RIVET—Cylinder air deflector extension to duct lower bracket spring	– 2	2	2	–	–	–	–	–	–	–

AVIATIONS WWW.AVIATIONS.COM

Fig. No.	Index Number	Part Number	Nomenclature 1 2 3 4 5 6 7	Units Per Assy—Model R1820 -40	-40B	-54	-60	-65	-71	-73	-87	-95	-97
		* 120205	EXTENSION—Cylinder air deflector, RH	–	1	1	1	–	–	–	–	–	–
		* 120206	EXTENSION—Cylinder air deflector, LH	–	1	1	1	–	–	–	–	–	–
		66D39	RIVET—Cylinder air deflector RH to LH extension	–	8	8	8	–	–	–	–	–	–
		AN430AD4-4	RIVET—Cylinder air deflector extension to duct bracket (Wright Part No. 66D51)	–	14	14	14	–	–	–	–	–	–
		120219	BRACKET—Cylinder air deflector RH to LH extension	–	1	1	1	–	–	–	–	–	–
		AN430AD4-4	RIVET—Cylinder air deflector RH to LH extension bracket (Wright Part No. 66D51)	–	2	2	2	–	–	–	–	–	–
		112828	PLATE—Cylinder air deflector extension	–	1	1	1	–	–	–	–	–	–
		S5-200	SPRING—Cylinder air deflector extension plate (Dzus Fastener Company Incorporated) (Wright Part No. 2112D1)	–	1	1	1	–	–	–	–	–	–
		66D19	RIVET—Cylinder air deflector extension plate and spring	–	2	2	2	–	–	–	–	–	–
		416222	COVER ASSEMBLY—Cylinder air deflector magneto conduit substituting	–	1	1	1	–	–	–	–	–	–
		* 113990	COVER—Cylinder air deflector magneto conduit substituting	–	1	1	1	–	–	–	–	–	–
		* 113991	PAD—Cylinder air deflector magneto conduit substituting cover	–	1	1	1	–	–	–	–	–	–
		66D47	RIVET—Cylinder air deflector magneto conduit substituting cover pad to cover	–	2	2	2	–	–	–	–	–	–
		27D183	WASHER—Cylinder air deflector magneto conduit substituting cover pad to cover	–	2	2	2	–	–	–	–	–	–
		415201	PLATE AND BOLT ASSEMBLY—Cylinder air deflector upper clamp	–	1	1	1	–	–	–	–	–	–
		* 112814	PLATE—Cylinder air deflector upper clamp	–	1	1	1	–	–	–	–	–	–
		* 2070D29	BOLT—Cylinder air deflector upper clamp plate	–	1	1	1	–	–	–	–	–	–
		AN515-6-8	SCREW—Cylinder air deflector magneto conduit substituting cover to deflector (Wright Part No. 15D5)	–	3	3	3	–	–	–	–	–	–
		2087D1	NUT—Cylinder air deflector magneto conduit substituting cover to deflector	–	3	3	3	–	–	–	–	–	–
		27D130	WASHER—Cylinder air deflector magneto conduit substituting cover to deflector	–	3	3	3	–	–	–	–	–	–
		66D19	RIVET—Cylinder air deflector upper clamp plate to deflector	–	3	3	3	–	–	–	–	–	–
		27D130	WASHER—Cylinder air deflector upper clamp plate to deflector	–	3	3	3	–	–	–	–	–	–
		* 113989N1	DEFLECTOR—Cylinder air	–	1	1	1	–	–	–	–	–	–
		66D39	RIVET—Cylinder air deflector extension to deflector	–	27	27	27	–	–	–	–	–	–
		116472	PLATE—Cylinder air deflector clamp spring	–	2	2	2	–	–	–	–	–	–
		66D19	RIVET—Cylinder air deflector clamp spring plate to deflector	–	4	4	4	–	–	–	–	–	–
		27D130	WASHER—Cylinder air deflector clamp spring plate to deflector	–	4	4	4	–	–	–	–	–	–
		112883	BUTTON—Cylinder air deflector buffer	–	4	4	4	–	–	–	–	–	–
		68837	CLAMP—Cylinder air deflector lower	–	1	1	1	–	–	–	–	–	–
		68840	PLATE—Cylinder air deflector lower clamp	–	1	1	1	–	–	–	–	–	–

AVIATIONS
WWW.AVIATIONS.COM

Fig. No.	Index Number	Part Number	Nomenclature 1 2 3 4 5 6 7	Units Per Assy—Model R1820 -40	-40B	-54	-60	-65	-71	-73	-87	-95	-97
		66D56	RIVET—Cylinder air deflector lower clamp and plate to deflector.....	–	2	2	2	–	–	–	–	–	–
		66D19	RIVET—Cylinder air deflector lower clamp to deflector.....	–	4	4	4	–	–	–	–	–	–
		27D130	WASHER—Cylinder air deflector lower clamp to deflector.....	–	4	4	4	–	–	–	–	–	–
		113996	SEAL—Cylinder air deflector extension.	–	1	1	1	–	–	–	–	–	–
		113997	PLATE—Cylinder air deflector extension seal reinforcing.....	–	1	1	1	–	–	–	–	–	–
		66D36	RIVET—Cylinder air deflector extension seal and reinforcing plate to deflector.....	–	5	5	5	–	–	–	–	–	–
		@ 416214	SCOOP ASSEMBLY—Cylinder air deflector *Factory installed on all -40B engines.* *For replacement, make the following substitutions:* Use *420368* Description *Scoop Assembly—Cylinder air deflector* Remove *416214* Quant. *1*; Use *420586N1* Description *Deflector and Extension Assembly—Cylinder air* Remove *416211* Quant. *1*	–	2	–	–	–	–	–	–	–	–
		416216	BRACKET ASSEMBLY—Cylinder air deflector scoop, upper.....	–	1	–	–	–	–	–	–	–	–
		* 114008	BRACKET—Cylinder air deflector scoop, upper RH.....	–	1	–	–	–	–	–	–	–	–
		* 114009	BRACKET—Cylinder air deflector scoop, upper LH.....	–	1	–	–	–	–	–	–	–	–
		AN430AD4-4	RIVET—Cylinder air deflector scoop upper bracket (Wright Part No. 66D51).....	–	4	–	–	–	–	–	–	–	–
		416217	BRACKET ASSEMBLY—Cylinder air deflector scoop, lower.....	–	1	–	–	–	–	–	–	–	–
		* 114006	BRACKET—Cylinder air deflector scoop, lower RH.....	–	1	–	–	–	–	–	–	–	–
		* 114007	BRACKET—Cylinder air deflector scoop, lower LH.....	–	1	–	–	–	–	–	–	–	–
		AN430AD4-4	RIVET—Cylinder air deflector scoop lower bracket (Wright Part No. 66D51).....	–	4	–	–	–	–	–	–	–	–
		* 114024	WIRE—Cylinder air deflector scoop reinforcing.....	–	2	–	–	–	–	–	–	–	–
		* 114010	SCOOP—Cylinder air deflector, RH....	–	1	–	–	–	–	–	–	–	–
		* 114011	SCOOP—Cylinder air deflector, LH.....	–	1	–	–	–	–	–	–	–	–
		66D39	RIVET—Cylinder air deflector scoop...	–	8	–	–	–	–	–	–	–	–
		AN430AD4-4	RIVET—Cylinder air deflector scoop bracket to scoop (Wright Part No. 66D51).....	–	16	–	–	–	–	–	–	–	–
		27D130	WASHER—Cylinder air deflector scoop bracket to scoop.....	–	16	–	–	–	–	–	–	–	–
40, 41	4257	420368	SCOOP ASSEMBLY—Cylinder air deflector *Factory installed on all -60 engines and on all -54 engines except 86728 to 86737.*	–	2	2	2	–	–	–	–	–	–
		421016	SPRING AND DZUS FASTENER ASSEMBLY—Cylinder air deflector scoop.....	–	1	1	1	–	–	–	–	–	–
		* 110526	SPRING—Cylinder air deflector scoop.....	–	1	1	1	–	–	–	–	–	–
		* AJ5-45	FASTENER—Cylinder air deflector scoop (Dzus Fastener Company Incorporated) (Wright Part No. 2111D2).....	–	1	1	1	–	–	–	–	–	–
		* 375	GROMMET—Cylinder air deflector scoop fastener (Dzus Fastener Company Incorporated) (Wright Part No. 2110D1)..	–	1	1	1	–	–	–	–	–	–

Fig. No.	Index Number	Part Number	Nomenclature 1 2 3 4 5 6 7	Units Per Assy—Model R1820 -40	-40B	-54	-60	-65	-71	-73	-87	-95	-97
		66D56	RIVET—Cylinder air deflector scoop spring and fastener	–	1	1	1	–	–	–	–	–	–
		27D130	WASHER—Cylinder air deflector scoop spring and fastener	–	1	1	1	–	–	–	–	–	–
		* 118639	SCOOP—Cylinder air deflector, RH	–	1	1	1	–	–	–	–	–	–
		* 118640	SCOOP—Cylinder air deflector, LH	–	1	1	1	–	–	–	–	–	–
		66D39	RIVET—Cylinder air deflector RH to LH scoop	–	2	2	2	–	–	–	–	–	–
		120219	BRACKET—Cylinder air deflector RH to LH scoop	–	1	1	1	–	–	–	–	–	–
		AN430AD4-4	RIVET—Cylinder air deflector RH to LH scoop bracket (Wright Part No. 66D51)	–	4	4	4	–	–	–	–	–	–
		27D130	WASHER—Cylinder air deflector RH to LH scoop bracket	–	4	4	4	–	–	–	–	–	–
		* 120222	SCREEN—Cylinder air deflector scoop	–	1	1	1	–	–	–	–	–	–
		* 120224	STRIP—Cylinder air deflector scoop screen reinforcing	–	1	1	1	–	–	–	–	–	–
		66D39	RIVET—Cylinder air deflector scoop screen reinforcing strip	–	8	8	8	–	–	–	–	–	–
		120223	BRACKET—Cylinder air deflector scoop attaching	–	1	1	1	–	–	–	–	–	–
		66D56	RIVET—Cylinder air deflector scoop attaching bracket	–	2	2	2	–	–	–	–	–	–
		27D130	WASHER—Cylinder air deflector scoop attaching bracket	–	2	2	2	–	–	–	–	–	–
40	4259	416215	DUCT ASSEMBLY—Cylinder air deflector.	–	2	–	–	–	–	–	–	–	–
41	4261	420584	DUCT ASSEMBLY—Cylinder air deflector.	–	–	2	2	–	–	–	–	–	–
		416221	BRACKET ASSEMBLY—Cylinder air deflector duct	–	1	1	1	–	–	–	–	–	–
		* 113993	BRACKET—Cylinder air deflector duct	–	1	1	1	–	–	–	–	–	–
		AJ5-35	FASTENER—Cylinder air deflector duct bracket (Dzus Fastener Company Incorporated) (Wright Part No. 2111D7)	–	1	1	1	–	–	–	–	–	–
		375	GROMMET—Cylinder air deflector duct bracket fastener (Dzus Fastener Company, Incorporated) (Wright Part No. 2110D1)	–	1	1	1	–	–	–	–	–	–
		AN430AD4-4	RIVET—Cylinder air deflector duct bracket to duct (Wright Part No. 66D51)	–	8	8	8	–	–	–	–	–	–
		* 114012	DUCT—Cylinder air deflector. *Part of assembly 416215.*	–	1	–	–	–	–	–	–	–	–
		* 118678	DUCT—Cylinder air deflector, RH. *Part of assembly 420584.*	–	–	1	1	–	–	–	–	–	–
		* 118679	DUCT—Cylinder air deflector, LH. *Part of assembly 420584.*	–	–	1	1	–	–	–	–	–	–
		66D39	RIVET—Cylinder air deflector RH to LH duct. *Part of assembly 420584.*	–	–	11	11	–	–	–	–	–	–
		113998	SEAL—Cylinder air deflector duct	–	1	1	1	–	–	–	–	–	–
		113999	PLATE—Cylinder air deflector duct seal reinforcing	–	1	1	1	–	–	–	–	–	–
		66D36	RIVET—Cylinder air deflector duct seal reinforcing plate	–	4	4	4	–	–	–	–	–	–
		375	GROMMET—Cylinder air deflector duct fastener (Dzus Fastener Company Incorporated) (Wright Part No. 2110D1)	–	1	1	1	–	–	–	–	–	–
		A5-30	FASTENER—Cylinder air deflector duct upper (Dzus Fastener Company Incorporated) (Wright Part No. 2111D1)	–	1	1	1	–	–	–	–	–	–
		1D1	NUT—Cylinder air deflector scoop to extension. *Used with deflector 416211.*	–	2	–	–	–	–	–	–	–	–

AVIAGS
WWW.AVIAGS.COM

Fig. No.	Index Number	Part Number	Nomenclature 1 2 3 4 5 6 7	Units Per Assy—Model R1820 -40	-40B	-54	-60	-65	-71	-73	-87	-95	-97
		34D51	WASHER—Cylinder air deflector scoop to extension..... *Used with deflector 416211.*	–	2	–	–	–	–	–	–	–	–
			CYLINDER HEAD AIR DEFLECTORS										
		@ 412286	DEFLECTOR ASSEMBLY—Cylinder head air..... *Quantities used: Nine units were factory installed on the following engines:* *-40* (94528 to 94567, 152790 to 152799 and 152854 to 152943) *-95* (31732 and 31733) *Eight units were factory installed on the following engines:* *-40* (31651 to 31674, 31676 to 31722, 45777 to 45876, 45879 to 45928, 45932 to 45934 and 152818 to 152820) *-95* (31741 to 31748, 31750 to 31752, 31805, 31812, 31814, 31818, 31823 and 80373 to 80376) *Superseded by 414327.*	#	9	–	9	–	9	–	9	#	–
39–45	4275	414327	DEFLECTOR ASSEMBLY—Cylinder head air..... *Quantities used: Nine units are used on the following engines:* *-40* (94528 to 94567, 152790 to 152799 and 152854 to 152943) *-95* (31732 and 31733) *Eight units are used on the following engines:* *-40* (31651 to 31674, 31676 to 31722, 45777 to 45876, 45879 to 45928, 45932 to 45934 and 152818 to 152820) *-95* (31741 to 31748, 31750 to 31752, 31805, 31812, 31814, 31818, 31823 and 80373 to 80376)	#	9	9	9	9	9	9	9	#	9
39, 45	4276	414334	DEFLECTOR ASSEMBLY—Cylinder head air (cylinder No. 1)..... *Factory installed on the following engines:* *-40* (31651 to 31674, 31676 to 31722, 45777 to 45876, 45879 to 45928, 45932 to 45934 and 152818 to 152820) *-95* (31741 to 31748, 31750 to 31752, 31805, 31812, 31814, 31818, 31823 and 80373 to 80376)	1	–	–	–	–	–	–	–	1	–
		* 111885	DEFLECTOR—Cylinder head air..... *Part of assemblies 412286 and 414327.*	1	1	1	1	1	1	1	1	1	1
		* 111982	DEFLECTOR—Cylinder head air..... *Part of assembly 414334.*	1	–	–	–	–	–	–	–	1	–
		69081	SCOOP—Cylinder head air deflector, long (8.12 in. overall)..... *Part of assembly 412286.*	#	1	–	1	–	1	–	1	#	–
		111886	SCOOP—Cylinder head air deflector, long (8 in. overall)..... *Part of assembly 414327.*	#	1	1	1	1	1	1	1	#	1
		111981	SCOOP—Cylinder head air deflector, long (6.43 in. overall)..... *Part of assembly 414334.*	1	–	–	–	–	–	–	–	1	–
		69082	SCOOP—Cylinder head air deflector, short (6 in. overall)..... *Part of assembly 412286.*	#	1	–	1	–	1	–	1	#	–
		111887	SCOOP—Cylinder head air deflector, short (4.50 in. overall)..... *Part of assembly 414327.*	#	1	1	1	1	1	1	1	#	1

AVIATIONS WWW.AVIATIONS.COM

Fig. No.	Index Number	Part Number	Nomenclature 1 2 3 4 5 6 7	Units Per Assy—Model R1820 -40	-40B	-54	-60	-65	-71	-73	-87	-95	-97
		111980	SCOOP—Cylinder head air deflector, short (3.85 in. overall)..... *Part of assembly 414334.*	1	–	–	–	–	–	–	–	1	–
		69083	BRACE—Cylinder head air deflector long scoop..... *Part of assemblies 412286 and 414327.*	1	1	1	1	1	1	1	1	1	1
		69084	BRACE—Cylinder head air deflector short scoop..... *Part of assemblies 412286 and 414327.*	1	1	1	1	1	1	1	1	1	1
		AN430AD4-4	RIVET—Cylinder head air deflector scoop to deflector (Wright Part No. 66D51)..... *Quantities used: With assembly 412286—seven units; with assembly 414327—seven units; with assembly 414334—one unit.*	#	7	7	7	7	7	7	7	#	7
		AN520-10-8	SCREW—Cylinder head air deflector brace to scoop (round head) (Wright Part No. 123D1)..... *Part of assemblies 412286 and 414327.*	2	2	2	2	2	2	2	2	2	2
		55D8	SCREW—Cylinder head air deflector brace to scoop (countersunk head) *Part of assemblies 412286 and 414327.*	2	2	2	2	2	2	2	2	2	2
		34D110	WASHER—Cylinder head air deflector brace to scoop (plain)..... *Part of assemblies 412286 and 414327.*	2	2	2	2	2	2	2	2	2	2
		34D114	WASHER—Cylinder head air deflector brace to scoop (countersunk)..... *Part of assemblies 412286 and 414327.*	2	2	2	2	2	2	2	2	2	2
		2087D2	NUT—Cylinder head air deflector brace to scoop..... *Part of assemblies 412286 and 414327.*	4	4	4	4	4	4	4	4	4	4
		69085	SUPPORT—Cylinder head air deflector scoop.....	1	1	1	1	1	1	1	1	1	1
		66D19	RIVET—Cylinder head air deflector scoop support to scoop and deflector.....	2	2	2	2	2	2	2	2	2	2
		27D130	WASHER—Cylinder head air deflector scoop support to scoop and deflector.....	2	2	2	2	2	2	2	2	2	2
		111979	BRACE—Cylinder head air deflector reinforcing, short (145 degree angle) *Part of assembly 414334.*	1	–	–	–	–	–	–	–	1	–
		111978	BRACE—Cylinder head air deflector reinforcing, long (120 degree angle) *Part of assembly 414334.*	1	–	–	–	–	–	–	–	1	–
		66D45	RIVET—Cylinder head air deflector reinforcing brace to deflector..... *Part of assembly 414334.*	4	–	–	–	–	–	–	–	4	–
39–45	4277	150D2	SCREW—Cylinder head air deflector to cylinder head.....	27	27	27	27	27	27	27	27	27	27
		27D1	WASHER—Cylinder head air deflector to cylinder head (.266 in. x .500 in. x .033 in.).....	9	9	9	9	9	9	9	9	9	9
39–45	4279	27D98	WASHER—Cylinder head air deflector to cylinder head (.266 in. x .781 in. x .063 in.).....	18	18	18	18	18	18	18	18	18	18

AVIATION PUBS
WWW.AVIATIONPUBS.COM

Fig. No.	Index Number	Part Number	Nomenclature 1 2 3 4 5 6 7	Units Per Assy—Model R1820 -40	-40B	-54	-60	-65	-71	-73	-87	-95	-97
			VALVE MECHANISM										
			ROCKER ARM										
			Rocker arms, bearings, hub bolts and nuts, adjusting screws and lock screws listed in "Cylinders" group.										
			PUSH ROD AND HOUSING										
		@ 411836	ROD ASSEMBLY—Push (early type)..... *Superseded by 416453.*	–	–	–	–	–	18	18	–	–	–
46	4300	416453	ROD ASSEMBLY—Push (late type).....	18	18	18	18	18	18	18	18	18	18
		* 68589	ROD—Push..... *Part of assembly 411863.*	–	–	–	–	–	1	1	–	–	–
		* 114359	ROD—Push..... *Part of assembly 416453.*	1	1	1	1	1	1	1	1	1	1
		* 64222	END—Push rod ball.....	2	2	2	2	2	2	2	2	2	2
		@ 118528	HOUSING—Push rod..... *Superseded by 68588.*	18	18	–	–	18	18	18	18	–	18
46	4302	68588	HOUSING—Push rod.....	18	18	18	18	18	18	18	18	18	18
		@ 2058D32	HOSE—Push rod housing (upper) (early type)..... *Superseded by 131036.*	18	18	18	18	18	18	18	18	18	18
46	4304	131036	HOSE—Push rod housing (upper) (late type)	18	18	18	18	18	18	18	18	18	18
		2058D54	HOSE—Push rod housing (lower)..... *Factory installed on all engines except -54 engines 452314 to 452378.*	18	18	18	18	18	18	18	18	18	18
46	4306	128570	HOSE—Push rod housing (lower)..... *Factory installed on -54 engines 452314 to 452378.*	–	–	18	–	–	–	–	–	–	–
		@ FB14	CLAMP—Push rod housing hose (Wittek Manufacturing Company) (Wright Part No. 5047D14) *For replacement on Navy engines, use 2163D15 and for replacement on Army engines, use M16.*	54	54	45	54	54	54	54	54	54	54
		2163D15	CLAMP—Push rod housing hose (wire type)	90	90	90	90	–	–	–	90	–	–
46	4308	M16	CLAMP—Push rod housing hose (thumb screw type) (Aircraft Standard Parts Company) (Wright Part No. 2179D4)	–	–	–	54	54	54	54	54	54	54
			VALVE TAPPET										
46	4330	68572	TAPPET—Valve.....	18	18	18	18	18	18	18	18	18	18
46	4332	68574	SOCKET—Valve tappet ball.....	18	18	18	18	18	18	18	18	18	18
46	4334	64962	SPRING—Valve tappet ball socket.....	18	18	18	18	18	18	18	18	18	18
		@ 68573	GUIDE—Valve tappet (early type)..... *Superseded by 113190.*	18	–	–	–	–	–	18	–	18	–
46	4336	113190	GUIDE—Valve tappet (late type).....	18	18	18	18	18	18	18	18	18	18
		@ 111977	GASKET—Valve tappet guide (early type)... *Superseded by 114431.*	18	–	–	–	–	–	18	–	18	–
46	4338	114431	GASKET—Valve tappet guide (late type)...	18	18	18	18	18	18	18	18	18	18
46	4340	2D1	NUT—Valve tappet guide to crankcase front section.....	36	36	36	36	36	36	36	36	36	36
46	4342	356-428	PALNUT—Valve tappet guide to crankcase front section nut (Wright Part No. 2000D1).....	36	36	36	36	36	36	36	36	36	36

Fig. No.	Index Number	Part Number	Nomenclature 1 2 3 4 5 6 7	Units Per Assy—Model R1820 -40 -40B -54 -60 -65 -71 -73 -87 -95 -97

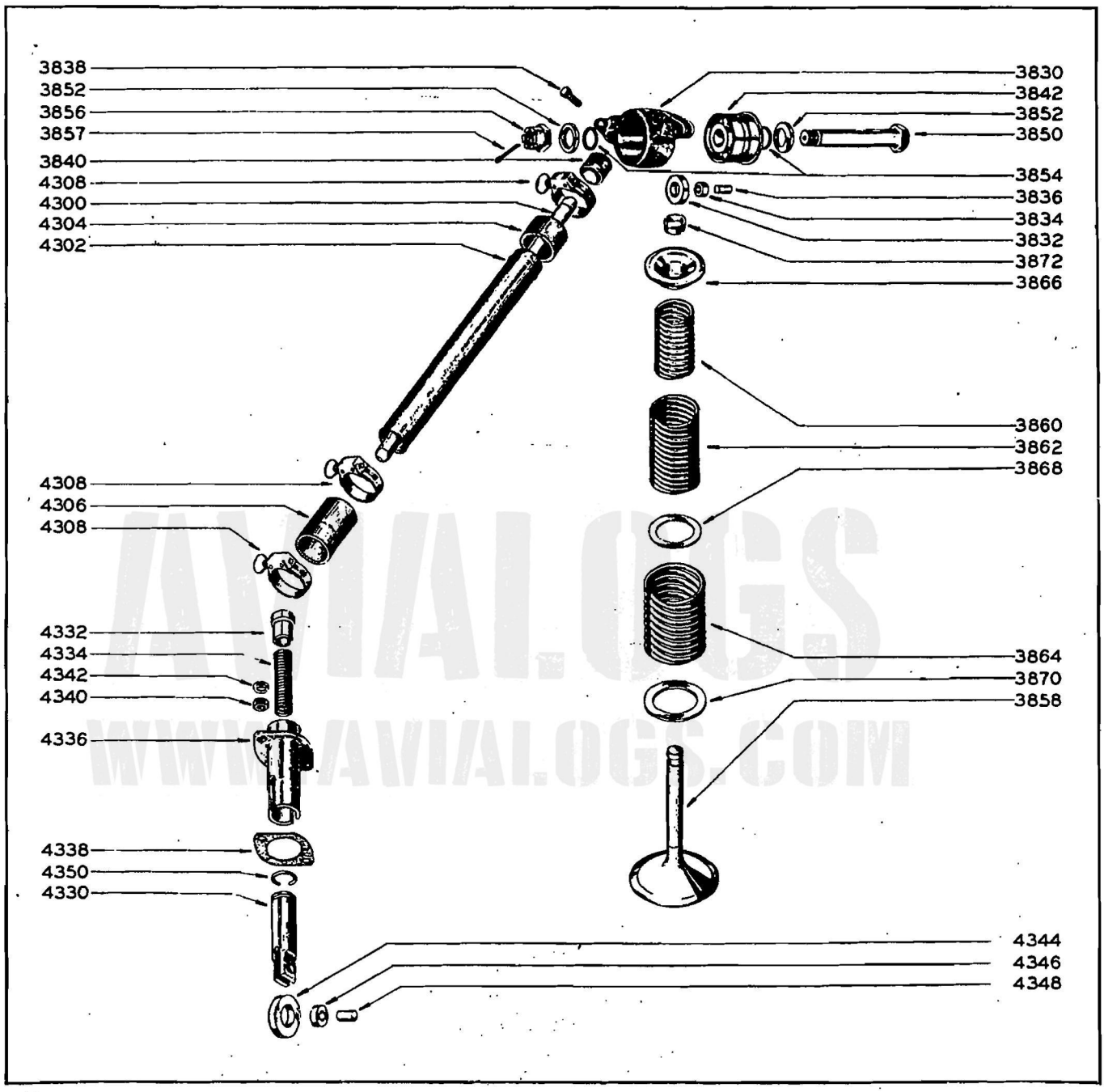

Numbers shown are index numbers and are numerically arranged in the Group Assembly Parts List

Figure 46—Valve Mechanism

		@ 110069	ROLLER—Valve tappet (early type)..... *Superseded by 116442.*	18	18	–	18	18	18	18	18	–	18
		@ 110282	ROLLER—Valve tappet (intermediate type) *Superseded by 116442.*	18	–	–	–	18	–	–	–	18	18
46	4344	116442	ROLLER—Valve tappet (late type).....	18	18	18	18	18	18	18	18	18	18
46	4346	64730	BUSHING—Valve tappet roller.....	18	18	18	18	18	18	18	18	18	18
46	4348	64731	PIN—Valve tappet roller.....	18	18	18	18	18	18	18	18	18	18

AVIALOGS
WWW.AVIALOGS.COM

Fig. No.	Index Number	Part Number	Nomenclature 1 2 3 4 5 6 7	Units Per Assy—Model R1820 -40	-40B	-54	-60	-65	-71	-73	-87	-95	-97
		@ 64725	CIRCLET—Valve tappet (early type)..... *Superseded by 67828.*	18	18	18	18	18	18	18	18	18	18
46	4350	67828	CIRCLET—Valve tappet (late type).....	18	18	18	18	18	18	18	18	18	18
			VALVES AND SPRINGS										
			Valves, springs, spring washers and locks listed in "Cylinders" group.										

IGNITION

MAGNETO

		@ 10-16525-4	MAGNETO—RH and LH (Scintilla SF9L3) (Wright Part No. 68797)..... *Factory installed on the following engines: -40* (31651 to 31674, 31676 to 31722, 45777 to 45876, 45879 to 45928, 45932 to 45934 and 152790 to 152799) *Superseded by 10-21225-1.*	2	–	–	–	–	–	–	–	–	–
		10-21225-1	MAGNETO—RH and LH (Scintilla SF9LN4) (Wright Part No. 112333N1)..... *Not factory installed on any engines. Supersedes 10-16525-4.*	2	–	–	–	–	–	–	–	–	–
47	4400	10-20700-1	MAGNETO—RH and LH (Scintilla SF9LN4) (Wright Part No. 111873)..... *Factory installed on all -40B, -71, -73, -87 and -95 engines and on the following engines: -40* (94528 to 94567, 152818 to 152820 and 152854 to 152943) *-65* (29898 to 29997, 30018 to 30050, 41102	2	2	–	–	2	2	2	2	2	–

AVIALOGS
WWW.AVIALOGS.COM

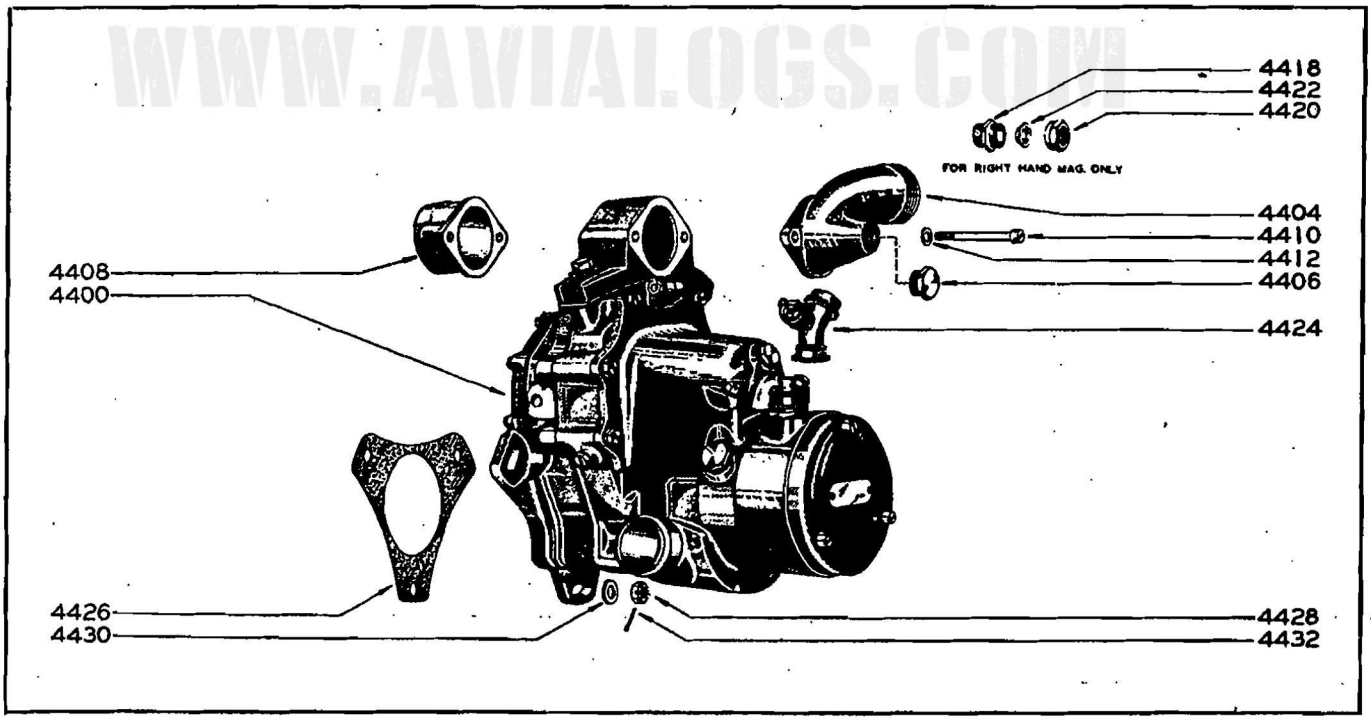

Numbers shown are index numbers and are numerically arranged in the Group Assembly Parts List

Figure 47—Magneto (Scintilla)

Fig. No.	Index Number	Part Number	Nomenclature 1 2 3 4 5 6 7	Units Per Assy—Model R1820 -40	-40B	-54	-60	-65	-71	-73	-87	-95	-97

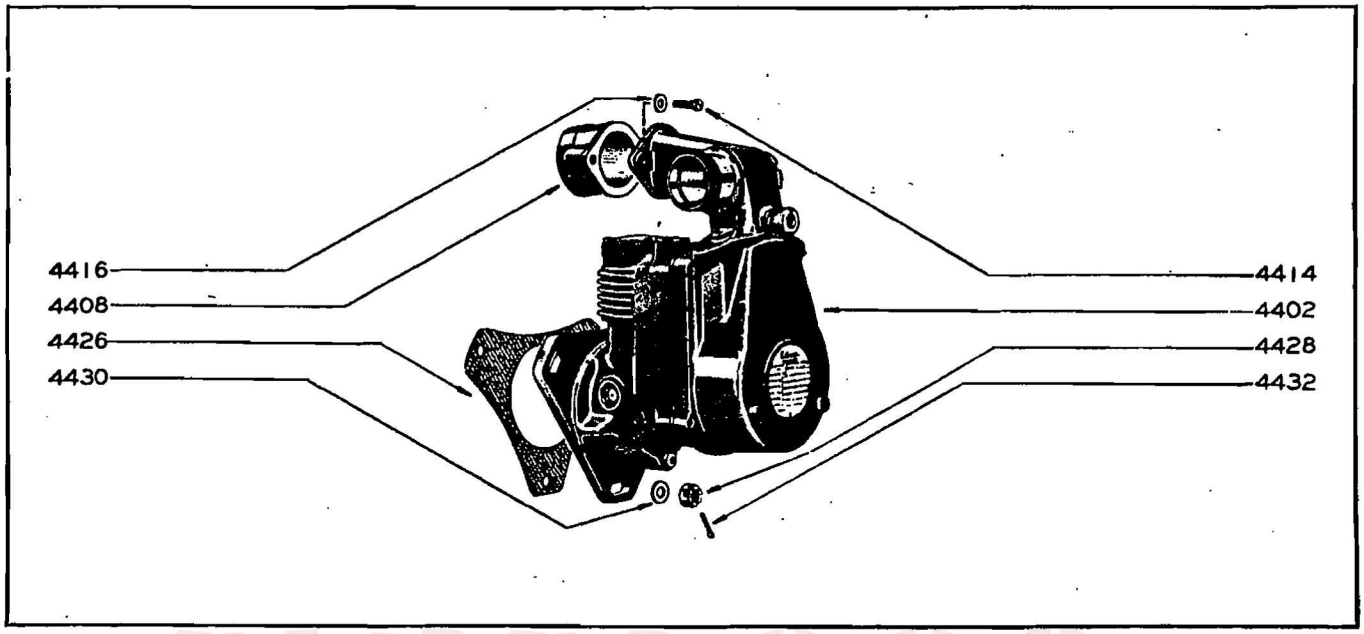

Numbers shown are index numbers and are numerically arranged in the Group Assembly Parts List

Figure 48—Magneto (Edison-Splitdorf)

			to 41122, 41124 to 41133, 41136 to 41267 44242 to 44295 and 44311 to 44699)										
48	4402	B-1001-1	MAGNETO—RH and LH (Edison-Splitdorf SF9LD1) (Wright Part No. 126129N1) *Factory installed on the following engines: -54* (86727 to 86866 and 429167 to 429193)	–	–	2	–	–	–	–	–	–	–
		B-1003-1	MAGNETO—RH and LH (Edison-Splitdorf SF9LD-3) (Wright Part No. 129169N1) *Factory installed on the following engines: -54* (429194 to 429376 and 452267 to 452378)	–	–	2	–	–	–	–	–	–	–
		MJR9A307	MAGNETO—RH (Bosch SF9LU3) (Wright Part No. 114076N1) *Factory installed on all -60 and -97 engines and on the following engines: -65* (29347, 44700 to 45387, 45394 to 45399, 45401 to 45474 and 45939 to 47456)	–	–	–	1	1	–	–	–	–	1
		MJR9A309	MAGNETO—LH (Bosch SF9LU3) (Wright Part No. 114077N1) *Factory installed on all -60 and -97 engines and on the following engines: -65* (29347, 44700 to 45387, 45394 to 45399, 45401 to 45474 and 45939 to 47456)	–	–	–	1	1	–	–	–	–	1
		@ 68832	ELBOW—Magneto shield outlet (RH upright or LH inverted) (early type) *Superseded by 68832N1.*	1	1	–	1	1	1	1	1	1	1
		68832N1	ELBOW—Magneto shield outlet (RH upright or LH inverted) (late type)	1	1	–	1	1	1	1	1	1	1
		@ 111874	ELBOW—Magneto shield outlet (LH upright or RH inverted) (early type) *Superseded by 111874N1.*	1	1	–	1	1	1	1	1	1	1
47	4404	111874N1	ELBOW—Magneto shield outlet (LH upright or RH inverted) (late type)	1	1	–	1	1	1	1	1	1	1
47	4406	27206	PLUG—Magneto shield outlet coupling substituting (LH magneto)	1	1	–	1	1	1	1	1	1	1

Fig. No.	Index Number	Part Number	Nomenclature 1 2 3 4 5 6 7	Units Per Assy—Model R1820 -40	-40B	-54	-60	-65	-71	-73	-87	-95	-97
		@ 67956	FLANGE—Magneto shield outlet (RH magneto) (early type)..... *Factory installed on the following engines: -40* (31651 to 31674, 31676 to 31722, 45777 to 45876 and 45879 to 45888) *-65* (29347, 29898 to 29997, 30018 to 30050, 41102 to 41122, 41124 to 41133, 41136 to 41267, 44242 to 44295, 44311 to 44636 and 44763) *Superseded by 112318N2.*	1	–	–	–	1	–	–	–	–	–
		@ 112318	FLANGE—Magneto shield outlet (RH magneto (intermediate type)..... *Factory installed on all -40B, -54, -60, -71, -73, -87, -95 and -97 engines and on the following engines: -40* (45889 to 45928, 45932 to 45934, 94528 to 94532, 152790 to 152799, 152818 to 152820 and 152854 to 152943) *–65* (44637 to 44762, 44764 to 45387, 45394 to 45399, 45401 to 45474 and 45939 to 47456) *Superseded by 112318N2.*	1	1	1	1	1	1	1	1	1	1
		112318N2	FLANGE—Magneto shield outlet (RH magneto) (late type).....	1	1	1	1	1	1	1	1	1	1
		@ 111540	FLANGE—Magneto shield outlet (LH magneto) (early type)..... *Superseded by 111540N2.*	1	1	1	1	1	1	1	1	1	1
47, 48	4408	111540N2	FLANGE—Magneto shield outlet (LH magneto) (late type).....	1	1	1	1	1	1	1	1	1	1
47	4410	150D5	SCREW—Magneto shield outlet elbow to outlet flange.....	4	4	–	4	4	4	4	4	4	4
47	4412	34D51	WASHER—Magneto shield outlet elbow to outlet flange.....	4	4	–	4	4	4	4	4	4	4
48	4414	143D4	SCREW—Magneto shield outlet flange to magneto.....	–	–	4	–	–	–	–	–	–	–
48	4416	34D51	WASHER—Magneto shield outlet flange to magneto.....	–	–	4	–	–	–	–	–	–	–
47	4418	27207	COUPLING—Magneto shield outlet (RH magneto).....	1	1	–	1	1	1	1	1	1	1
		@ 24876	NUT—Magneto shield outlet coupling (early type)..... *Superseded by 115961N2.*	1	–	–	–	–	–	–	–	1	–
47	4420	115961N2	NUT—Magneto shield outlet coupling (late type).....	1	1	–	1	1	1	1	1	1	1
47	4422	3154-2	PACKING—Magneto shield outlet coupling (Breeze Corporations Incorporated) (Wright Part No. 24391N1).....	1	1	–	1	1	1	1	1	1	1
47	4424	10-14477	BOX—Magneto ground wire (Scintilla Magneto Company) (Wright Part No. 69453)..... *Quantities used: One unit used for -40 engines 31651 to 31674 and 31676 to 31722; two units used for -40 engines 152818 to 152820.*	#	2	–	–	2	2	2	2	2	2
		2108D3	CABLE—Magneto booster.....	1	1	–	1	–	–	–	–	–	–
		@ 111787	CABLE—Magneto booster (early type)..... *Superseded by 62808.*	–	–	–	–	–	10 ft	–	10 ft	–	–
		62808	CABLE—Magneto booster (late type).....	–	–	–	–	10 ft	10 ft	10 ft	10 ft	10 ft	10 ft
		@ 66816	FERRULE—Magneto booster cable (early type)..... *Superseded by 118995.*	1	1	–	–	1	1	1	–	–	1

Fig. No.	Index Number	Part Number	Nomenclature 1 2 3 4 5 6 7	Units Per Assy—Model R1820 -40	-40B	-54	-60	-65	-71	-73	-87	-95	-97
		118995	FERRULE—Magneto booster cable (late type)	1	1	–	1	1	1	1	1	1	1
47, 48	4426	25677	GASKET—Magneto	2	2	2	2	2	2	2	2	2	2
47, 48	4428	1D4	NUT—Magneto to supercharger rear cover	6	6	6	6	6	6	6	6	6	6
47, 48	4430	34D4	WASHER—Magneto to supercharger rear cover	6	6	6	6	6	6	6	6	6	6
47, 48	4432	57D1	COTTER PIN—Magneto to supercharger rear cover nut	6	6	6	6	6	6	6	6	6	6
			IGNITION CABLE										
		@ E605-4P-AN	IGNITION CABLE ASSEMBLY—(Breeze Corporations Incorporated) (Wright Part No. 68958N3)	–	–	–	–	–	–	–	1	1	–
			Factory installed on the following engines: -87 (73155 to 73171, 73196 to 73204 and 152542 to 152550)										
			-95 (31732, 31733, 31741 to 31748, 31750 to 31752, 31805, 31812, 31814, 31818 and 31823)										
			E605-4P-AN is used with but does not include four detachable manifold mounting clamps.										
			For replacement on Army engines use cable complete 890660 plus two of flange 130D64 and remove one each of elbows 68832N1, 111874N1 and four each of support 68859 and clamp 4019D8.										
			For replacement on Navy engines use cable assembly E757-4P-AN plus two of flange 130D64 and remove one each of elbows 68832N1, 111874N1 and four each of support 68859 and clamp 4019D8.										
		@ E615-4P-AN	IGNITION CABLE ASSEMBLY—(Breeze Corporations Incorporated) (Wright Part No. 69661N3)	1	–	–	–	1	–	–	–	–	–
			Factory installed on the following engines: -40 (31651 to 31674, 31676 to 31722, 45777 to 45876, 45879 to 45928 and 45932 to 45934)										
			-65 (29898 to 29944 and 29946 to 29949)										
			E615-4P-AN includes four soldered manifold mounting clamps.										
			For replacement on Army engines use cable complete 890660 plus two of flange 130D64 and remove one each of elbows 68832N1, 111874N1 and four each of support 69785, bolt 63D36 and nut 1D4.										
			For replacement on Navy engines use cable assembly E-757-4P-AN plus two of flange 130D64 and remove one each of elbows 68832N1, 111874N1 and four each of support 69785, bolt 63D36 and nut 1D4.										
		@ E611-4P-AN	IGNITION CABLE ASSEMBLY—(Breeze Corporations Incorporated) (Wright Part No. 111412N3)	–	–	–	–	1	–	1	1	–	–
			Factory installed on all -73 engines and on the following engines: -65 (29347, 29945, 29950 to 29997, 30018 to 30050, 41102 to 41122, 41124 to 41133, 41136 to 41267, 44242 to 44295, 44311 to 44699 and 44763)										
			-87 (73280 to 73303, 86997 to 87005 and 87546 to 87559)										

AVIATIONS
WWW.AVIATIONS.COM

Fig. No.	Index Number	Part Number	Nomenclature 1 2 3 4 5 6 7	Units Per Assy—Model R1820 -40	-40B	-54	-60	-65	-71	-73	-87	-95	-97
			E611-4P-AN is used with but does not include four detachable manifold mounting clamps.										
			For replacement on Army engines use cable complete 890660 plus two of flange 130D64 and remove one each of elbows 68832N1, 111874N1 and four each of support 68859 and clamp 4019D8.										
			For replacement on Navy engines use cable assembly E757-4P-AN plus two of flange 130D64 and remove one each of elbows 68832N1, 111874N1 and four each of support 68859 and clamp 4019D8.										
		@ E668-4P-AN	IGNITION CABLE ASSEMBLY—(Breeze Corporations Incorporated) (Wright Part No. 115081N3).....	1	1	–	1	–	–	–	–	–	–
			Factory installed on the following engines:										
			-40 (94528 to 94507, 152790 to 152799, 152818 to 152820 and 152854 to 152943)										
			-40B (80361 to 80372 and 94588 to 94682)										
			-60 (88168 to 88196, 155763 to 155817, 156289 to 157422 and 426451 to 426720)										
			E668-4P-AN includes four soldered manifold mounting clamps.										
			For replacement on Army engines use cable complete 890660 plus two of flange 130D64 and remove one each of elbows 68832N1, 111874N1 and four each of support 69785, bolt 63D36 and nut 1D4.										
			For replacement on Navy engines use cable assembly E757-4P-AN plus two of flange 130D64 and remove one each of elbows 68832N1, 111874N1 and four each of support 69785, bolt 63D36 and nut 1D4.										
		@ E667-4P-AN	IGNITION CABLE ASSEMBLY—(Breeze Corporations Incorporated) (Wright Part No. 115080N3).....	–	1	1	1	1	1	–	1	1	–
			Factory installed on the following engines:										
			-40B (94578 to 94587)										
			-54 (86727 to 86866 and 429167 to 429193)										
			-60 (80137 to 80279, 157423 to 158093, 183147 to 183464, 425321 to 426450 and 454477 to 455407)										
			-65 (44700 to 44762, 44764 to 45387, 45394 to 45399, 45401 to 45403 and 47443 to 47456)										
			-71 (41442, 41443, 41469 to 41486, 41510 to 41514, 45545 to 45549, 45560, 152650 to 152667, 152772 to 152787, 152802 to 152805, 152810 to 152817, 152824 to 152839, 152842 to 152853 and 152944 to 153085)										
			-87 (47457 to 47466, 73172 to 73195, 73205 to 73228, 80302 to 80360, 87006 to 87532, 87560 to 87857, 94568 to 94577, 152491 to 152541, 152551 to 152555, 152821 to 152823, 153086 to 153210 and 183112 to 183146)										
			-95 (80373 to 80376)										
			E667-4P-AN is used with but does not include four detachable manifold mounting clamps.										
			For replacement on Army engines use cable complete 890660 plus two of flange 130D64 and remove one each of elbows 68832N1, 111874N1 and four each of support 68859 and clamp 4019D8.										
			For replacement on Navy engines using an Edison-Splitdorf magneto use cable assembly										

Fig. No.	Index Number	Part Number	Nomenclature 1 2 3 4 5 6 7	Units Per Assy—Model R1820 -40 -40B -54 -60 -65 -71 -73 -87 -95 -97

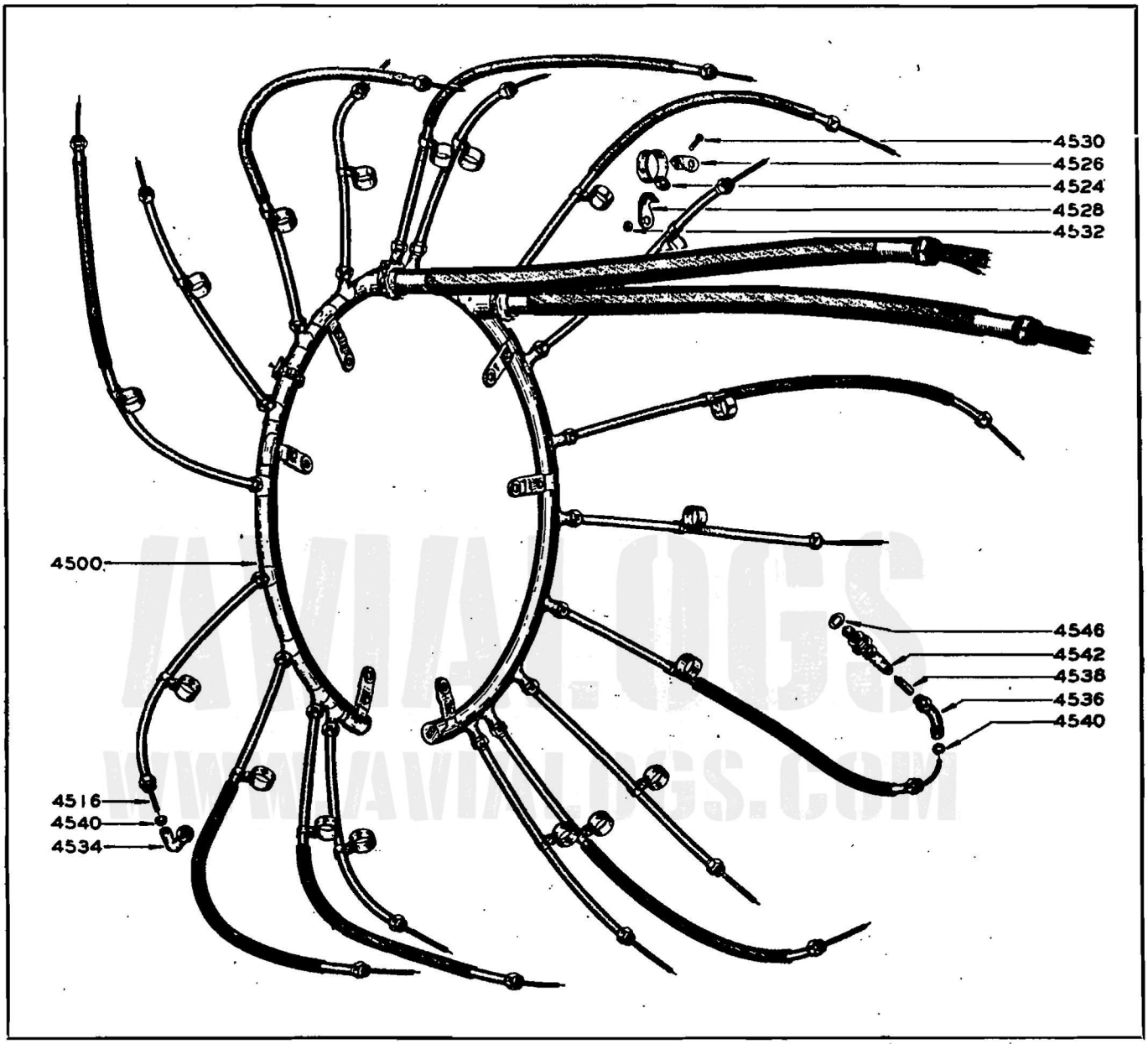

Numbers shown are index numbers and are numerically arranged in the Group Assembly Parts List

Figure 49—Ignition Cable Assembly and Spark Plug (Breeze)

E757-4P-AN and remove four each of support 68859 and clamp 4019D8.

For replacement on Navy engines using Scintilla or Bosch magnetos use cable assembly E757-4P-AN plus two of flange 130D64 and remove one each of elbows 68832N1, 111874N1 and four each of support 68859 and clamp 4019D8.

49	4500	E757-4P-AN	IGNITION CABLE ASSEMBLY—(Breeze Corporations Incorporated) (7 mm) (Wright Part No. 129038N3).....	1	1	1	1	1	1	1	1	1	–

Factory installed on the following engines:

Fig. No.	Index Number	Part Number	Nomenclature 1 2 3 4 5 6 7	Units Per Assy—Model R1820 -40	-40B	-54	-60	-65	-71	-73	-87	-95	-97
			-54 (429194 to 429376 and 452267 to 452378)										
			E757-4P-AN is a continuous ring harness and includes six soldered manifold mounting clamps.										
		D31043	IGNITION CABLE ASSEMBLY—(Titeflex Metal Hose Company) (7mm) (Wright Part No. 111419N3).....	–	–	–	1	1	1	–	1	–	1
			Factory installed on all -97 engines and on the following engines:										
			-60 (47468, 47469, 73229 to 73279, 73304 to 73429, 73432 to 73914 and 155824 to 155879										
			-65 (45404 to 45474 and 45939 to 47442)										
			-71 (41296 to 41298, 41418, 41487 to 41506, 44231 to 44241, 44296 to 44307 and 152629 to 152649)										
			-87 (79867 to 80136, 88098 to 88167, 93880 to 94527, 183060 to 183111 and 189949 to 190065)										
			D31043 is used with but does not include four detachable manifold mounting clamps.										
			For replacement on Army engines use 890522.										
		890660 (890269)	IGNITION CABLE ASSEMBLY COMPLETE—(With 5 mm Breeze cable)..	–	–	–	1	1	1	1	1	1	–
			Supplied for replacement of cables E605-4P-AN, E615-4P-AN, E611-4P-AN, E668-4P-AN, E667-4P-AN and 890269.										
		890522	IGNITION CABLE ASSEMBLY COMPLETE—(With 5 mm Titeflex cable).	–	–	–	1	1	1	–	1	–	1
			Supplied for replacement of D31043 on Army engines.										
		E757-4P-4R	IGNITION CABLE ASSEMBLY—(Breeze Corporations Incorporated) (5 mm) (Wright Part No. 129038N17).....	–	–	–	1	1	1	1	1	1	–
50	4502	D31040	IGNITION CABLE ASSEMBLY—(Titeflex Metal Hose Company) (5 mm) (Wright Part No. 127508-N17).....	–	–	–	1	1	1	–	1	–	1
50	4504	127281	ADAPTER—Magneto shield outlet.....	–	–	–	18	18	18	18	18	18	18
50	4506	127282	ADAPTER—Spark plug shielded terminal.....	–	–	–	18	18	18	18	18	18	18
50	4508	127283N2	ELBOW—Spark plug shielded terminal (70 degrees) (front).....	–	–	–	9	9	9	9	9	9	9
50	4510	127283N11	ELBOW—Spark plug shielded terminal (110 degrees) (rear).....	–	–	–	9	9	9	9	9	9	9
50	4512	127298N	PACKING—Spark plug shielded terminal elbow.....	–	–	–	18	18	18	18	18	18	18
50	4514	127284	CONTACT—Spark plug shielded terminal.....	–	–	–	18	18	18	18	18	18	18
		116539N1	PROTECTOR AND CABLE ATTACHMENT—Spark plug shielded terminal.....	–	–	–	18	18	18	18	18	18	18
49	4516	62808	CABLE—Ignition (7 mm).....	#	#	#	#	#	#	#	#	#	#
			Quantities used:										
			With assembly E605-4P-AN—147 feet										
			With assembly E615-4P-AN—131 feet										
			With assembly E611-4P-AN—147 feet										
			With assembly E668-4P-AN—129 feet										
			With assembly E667-4P-AN—129 feet										
			With assembly E757-4P-AN—129 feet										
			With assembly D31043—119 feet										
50	4518	127280	CABLE—Ignition (5 mm).....	–	–	–	129 ft	129 ft	129 ft	129 ft	129 ft	129 ft	129 ft
			Used in cables E757-4P-4R and D31040.										

Fig. No.	Index Number	Part Number	Nomenclature 1 2 3 4 5 6 7	Units Per Assy—Model R1820 -40 -40B -54 -60 -65 -71 -73 -87 -95 -97

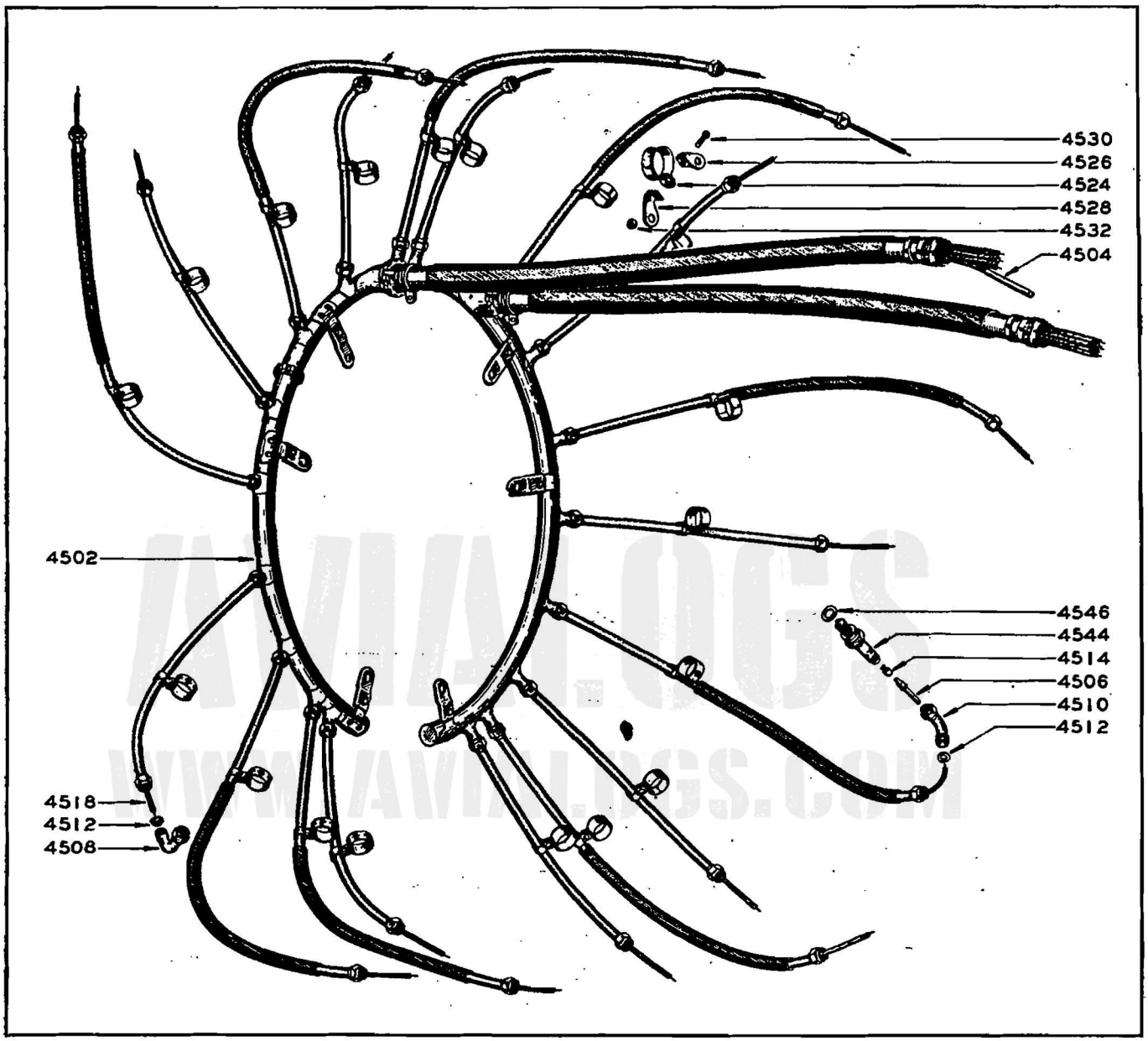

Numbers shown are index numbers and are numerically arranged in the Group Assembly Parts List

Figure 50—Ignition Cable Assembly and Spark Plug (Titeflex)

69785	SUPPORT—Ignition cable manifold to crankcase front section..... *Used with cable assemblies E615-4P-AN and E668-4P-AN.* *69785 includes an elongated hole for attaching the ignition cable manifold.*	4	4	–	4	4	–	–	4	–	–
68859	SUPPORT—Ignition cable manifold to crankcase front section..... *Used with cable assemblies E605-4P-AN, E611-4P-AN, D31043 and E667-4P-AN.* *68859 does not include an elongated hole for attaching the ignition cable manifold.*	4	4	4	4	4	4	4	4	4	4

Fig. No.	Index Number	Part Number	Nomenclature 1 2 3 4 5 6 7	Units Per Assy—Model R1820 -40	-40B	-54	-60	-65	-71	-73	-87	-95	-97
		4019D8	CLAMP—Ignition cable manifold to support *Used with support 68859.*	4	4	4	4	4	4	4	4	4	4
		63D36	BOLT—Ignition cable manifold support..... *Used with support 69785.*	4	4	–	4	4	–	–	4	–	–
		1D4	NUT—Ignition cable manifold support..... *Used with support 69785.*	4	4	–	4	4	–	–	4	–	–
49, 50	4524	111541	CLAMP—Ignition cable manifold support...	1	1	2	2	2	2	2	2	1	2
49, 50	4526	111542	BRACKET—Ignition cable manifold support clamp, right.....	1	1	2	2	2	2	2	2	1	2
49, 50	4528	111543	BRACKET—Ignition cable manifold support clamp, left.....	1	1	2	2	2	2	2	2	1	2
		120398	SPACER—Ignition cable manifold support clamp bracket.....	–	–	–	–	–	–	–	–	–	1
49, 50	4530	AN520-10-10	SCREW—Ignition cable manifold support clamp to bracket (Wright Part No. 123D5) (.625 in. long).....	1	1	2	2	2	2	2	2	1	1
		123D9	SCREW—Ignition cable manifold support clamp to bracket (1.250 in. long).....	–	–	–	–	–	–	–	–	–	1
49, 50	4532	2087D2	NUT—Ignition cable manifold support clamp to bracket.....	1	1	2	2	2	2	2	2	1	2
		@ 113103N2	ELBOW—Spark plug shielded terminal (front) (70 degrees) (.625 in.-24 thread).....	–	18	–	–	–	–	–	9	–	–
			Factory installed on the following engines: *-40B* (94578 to 94587) *-87* (73155 to 73177, 73216 to 73228, 73280 to 73303 and 183060 to 183111) *113103N2 is used with flat packing.* *For replacement, make the following substitutions:* Use — Description — Remove — Quant. *113102N2* — *Elbow—Spark plug shielded terminal* — *113103N2* — *1* *24391N* — *Packing—Spark plug shielded terminal elbow* — *37D99* — *1*										
		@ 113103N11	ELBOW—Spark plug shielded terminal (rear) (110 degrees) (.625 in.-24 thread)	–	–	–	–	–	–	–	9	–	–
			Factory installed on the following engines: *-87* (73155 to 73177, 73216 to 73228, 73280 to 73303 and 183060 to 183111) *113103N11 is used with flat packing.* *For replacement, make the following substitutions:* Use — Description — Remove — Quant. *113102N11* — *Elbow—Spark plug shielded terminal* — *113103N11* — *1* *24391N* — *Packing—Spark plug shielded terminal elbow* — *37D99* — *1*										
		113102N1	ELBOW—Spark plug shielded terminal (front) (70 degrees) (.563 in.-27 thread)	#	–	–	–	–	–	–	–	–	–
			Quantities used: *Eighteen units were factory installed on the following engines:* *-40* (31651 to 31668 and 31676 to 31709) *Nine units were factory installed on the following engines:* *-40* (31669 to 31674 and 31710 to 31722)										

AVIATION BOOKS
WWW.AVIATIONBOOKS.COM

Fig. No.	Index Number	Part Number	Nomenclature 1 2 3 4 5 6 7	Units Per Assy—Model R1820 -40	-40B	-54	-60	-65	-71	-73	-87	-95	-97
		113102N10	ELBOW—Spark plug shielded terminal (rear) (110 degrees) (.563 in.-27 thread) *Factory installed on the following engines:* *-40* (31669 to 31674 and 31710 to 31722)	9	–	–	–	–	–	–	–	–	–
49	4534	113102N2	ELBOW—Spark plug shielded terminal (front) (70 degrees) (.625 in.-24 thread) *Nine units were factory installed on all -54, -60, -71, -73, -95 and -97 engines and on the following engines:* *-40* (45777 to 45876, 45879 to 45928, 45932 to 45934, 94528 to 94567, 152790 to 152799, 152818 to 152820 and 152854 to 152943) *-65* (30046 to 30050, 41102 to 41122, 41124 to 41133, 41136 to 41267, 44242 to 44295, 44311 to 45387, 45394 to 45399, 45401 to 45474 and 45939 to 47456) *-87* (47457 to 47466, 73178 to 73215, 79867 to 80136, 80302 to 80360, 86997 to 87532, 87546 to 87857, 88098 to 88167, 93880 to 94527, 94568 to 94577, 152491 to 152555, 152821 to 152823, 153086 to 153210, 183112 to 183146 and 189949 to 190065) *Eighteen units were factory installed on the following engines:* *-40B* (80361 to 80372 and 94588 to 94682) *-65* (29347, 29898 to 29997 and 30018 to 30045)	9	18	9	9	#	9	9	9	9	9
49	4536	113102N11	ELBOW—Spark plug shielded terminal (rear) (110 degrees) (.625 in.-24 thread) *Factory installed on all -54, -60, -71, -73, -95 and -97 engines and on the following engines:* *-40* (45777 to 45876, 45879 to 45928, 45932 to 45934, 94528 to 94567, 152790 to 152799, 152818 to 152820 and 152854 to 152943) *-65* (30046 to 30050, 41102 to 41122, 41124 to 41133, 41136 to 41267, 44242 to 44295, 44311 to 45387, 45394 to 45399, 45401 to 45474 and 45939 to 47456) *-87* (47457 to 47466, 73178 to 73215, 79867 to 80136, 80302 to 80360, 86997 to 87532, 87546 to 87857, 88098 to 88167, 93880 to 94527, 94568 to 94577, 152491 to 152555, 152821 to 152823, 153086 to 153210, 183112 to 183146 and 189949 to 190065)	9	–	9	9	9	9	9	9	9	9
		@ 61722	CONTACT—Spark plug shielded terminal (early type) (for 7 mm cable)..... *Superseded by 118383.*	18	18	–	18	18	18	18	18	18	18
49	4538	118383	CONTACT—Spark plug shielded terminal (late type) (for 7 mm cable).....	18	18	18	18	18	18	18	18	18	18
		37D99	PACKING—Spark plug shielded terminal elbow, flat..... *Used with elbows 113103N2 and 113103N11.*	–	–	–	–	–	–	–	18	–	–
49	4540	24391N	PACKING—Spark plug shielded terminal elbow, conical..... *Used with elbows 113102N1, 113102N2, 113102N10 and 113102N11.*	18	18	18	18	18	18	18	18	18	18
			SPARK PLUGS										
		5S5	SPARK PLUG ASSEMBLY—(Bendix) (.563 in.-27 thread at terminal end) (Wright Part No. 69561)..... *Factory installed on the following engines:* *-40* (45777 to 45876, 45879 to 45928, 45932 to 45934 and 152818 to 152820) *-54* (86794 to 86803)	18	–	18	–	–	–	–	–	–	–

Fig. No.	Index Number	Part Number	Nomenclature 1 2 3 4 5 6 7	Units Per Assy—Model R1820 -40	-40B	-54	-60	-65	-71	-73	-87	-95	-97
49	4542	LS465	SPARK PLUG ASSEMBLY—(BG) (.625 in.-24 thread at terminal end) (Wright Part No. 112895).....	18	18	–	18	18	18	18	18	–	–
			Factory installed on all -40B and -73 engines and on the following engines:										
			-40 (94528 to 94567, 152790 to 152799 and 152854 to 152943)										
			-60 (73230 to 73233, 73235, 73237, 73238, 73240, 73241, 73243, 73244, 73246 to 73249, 73251, 73255, 73256, 73259, 73263 to 73265, 73268, 73271 to 73274, 156316 to 157046, 157155 to 157186 and 426451 to 426720)										
			-65 (41172 to 41267, 44242 to 44295, 44311 to 45387, 45394 to 45399, 45401 to 45474 and 45939 to 46415)										
			-71 (41442, 41443, 41469 to 41474, 41510 to 41514, 45545 to 45549, 45560, 152629 to 152667, 152772 to 152787, 152802 to 152805, 152810 to 152817, 152824 to 152839, 152842 to 152853 and 152944 to 152965)										
			-87 (88098 to 88167, 94568 to 94575 and 183112 to 183131)										
		LS465A	SPARK PLUG ASSEMBLY—(BG) (.625 in.-24 thread at terminal end) (Wright Part No. 117596).....	–	–	18	18	–	–	–	18	–	–
			Factory installed on the following engines:										
			-54 (86727 to 86793)										
			-60 (80252, 80253, 157047 to 157154, 425321 to 425535, 425537 to 425809, 425811 to 426450 and 454477 to 455407)										
			-87 (94576 to 94577 and 183132 to 183146)										
		LS298	SPARK PLUG ASSEMBLY—(BG) (.625 in.-24 thread at terminal end) (Wright Part No. 111556).....	–	–	–	–	–	18	–	–	–	–
			Factory installed on the following engines:										
			-71 (41296 to 41298, 41418, 45545 to 45549, 45560, 152629 and 152630)										
	@	LS85	SPARK PLUG ASSEMBLY—(AC) (.625 in.-24 thread at terminal end) (Wright Part No. 114489).....	–	–	–	–	–	18	–	18	18	18
			Factory installed on all -95 engines and on the following engines:										
			-71 (41475 to 41506, 44231 to 44241 and 44296 to 44307)										
			-87 (79867 to 80136, 80302 to 80360, 86997 to 87323, 87419 to 87478, 87546 to 87601 and 87696 to 87728)										
			-97 (69897 to 69996, 70097 to 70546, 70603 to 70624, 70865 to 70913, 71394, 71411, 71414, 71419, 71450, 71456, 71462, 71466, 71469 to 71473, 71477, 71479, 71481 to 71483 and 80787 to 80791)										
			Superseded by LS87.										
		LS87	SPARK PLUG ASSEMBLY—(AC) (.625 in.-24 thread at terminal end) (Wright Part No. 118362).....	–	–	–	–	–	18	–	18	18	18
			Factory installed on the following engines:										
			-87 (47457 to 47466, 87324 to 87418, 87479 to 87532, 87602 to 87695, 87729 to 87857 152491 to 152555 and 153086 to 153210)										
			-97 (47467, 71484 to 71785, 80792 to 81234 and 81236 to 82306)										
	@	LS38C	SPARK PLUG ASSEMBLY—(Aero) (.625 in.-24 thread at terminal end) (Wright Part No. 110323).....	–	–	–	–	18	–	–	–	–	–
			Factory installed on the following engines:										

AVIATIONGS
WWW.AVIATIONGS.COM

Fig. No.	Index Number	Part Number	Nomenclature 1 2 3 4 5 6 7	Units Per Assy—Model R1820 -40	-40B	-54	-60	-65	-71	-73	-87	-95	-97
			-65 (29898 to 29997, 30018 to 30050, 41102 to 41122 and 41124 to 41171)										
			Superseded by LS38C-E111.										
		LS38C-E111	SPARK PLUG ASSEMBLY—(Aero) (.625 in.-24 thread at terminal end) (Wright Part No. 116764).....	–	–	–	18	18	18	–	–	–	–
			Factory installed on the following engines:										
			-60 (157187 to 158093 and 183147 to 183464)										
			-71 (152966 to 153085)										
		C-34S	SPARK PLUG ASSEMBLY—(Champion) (.625 in.-24 thread at terminal end) (Wright Part No. 114490).....	–	–	18	–	18	–	–	18	–	18
			Factory installed on the following engines:										
			-54 (86804 to 86866, 429167 to 429376 and 452267 to 452416)										
			-65 (29347 and 46416 to 47456)										
			-87 (73155 to 73228, 73280 to 73303, 93880 to 94209 and 152821 to 152823)										
			-97 (69425 to 69896, 69997 to 70096, 70547 to 70602, 70625 to 70864, 70914 to 71476, 71478, 71480 and 71786 to 72760)										
50	4544	C-35S	SPARK PLUG ASSEMBLY—(Champion) (.625 in.-24 thread at terminal end) (Wright Part No. 118602).....	–	–	–	18	–	–	–	18	–	18
			Factory installed on the following engines:										
			-60 (47468, 47469, 73229, 73234, 73236, 73239, 73242, 73245, 73250, 73252 to 73254, 73257, 73258, 73260 to 73262, 73266, 73267, 73269, 73270, 73275 to 73279, 73304 to 73429, 73432 to 73914, 80137 to 80251, 80254 to 80279, 88168 to 88196, 155763 to 155817, 155824 to 155879, 156289 to 156315, 425536 and 425810)										
			-87 (94208 to 94527, 183060 to 183111 and 189949 to 190065)										
			-97 (190066 to 190522)										
49, 50	4546	AN4027-1	WASHER—Spark plug (Wright Part No. 27D104).....	18	18	18	18	18	18	18	18	18	18

CARBURETION

CARBURETOR

		@ 392035-5	CARBURETOR AND ADAPTER ASSEMBLY—(Stromberg Model PD 12H3) (Wright Part No. 111544N1).....	–	–	–	–	–	1	–	1	1	–
			Factory installed on all -95 engines and on the following engines:										
			-71 (41296 to 41298, 41418, 41487 to 41506, 44231 to 44241 and 44296 to 44307)										
			-87 (73155 to 73167 and 93906 to 93928)										
			Superseded by 392313.										
51	4700	392313	CARBURETOR AND ADAPTER ASSEMBLY—(Stromberg Model PD 12H3) (Wright Part No. 111544N13).....	–	1	–	–	–	1	–	1	1	–
			Factory installed on all -40B engines and on the following engines:										
			-71 (41442, 41443, 41469 to 41486, 41510 to 41514, 45545 to 45549, 45560, 152629 to 152667, 152772 to 152787, 152802 to 152805, 152810 to 152817, 152824 to 152839, 152842 to 152853 and 152944 to 153085)										
			-87 (47457 to 47466, 73168 to 73228, 73280 to 73303, 79867 to 80136, 80302 to 80360, 86997 to 87532, 87546 to 87857, 88098 to										

Fig. No.	Index Number	Part Number	Nomenclature 1 2 3 4 5 6 7	Units Per Assy—Model R1820 -40	-40B	-54	-60	-65	-71	-73	-87	-95	-97
			88167, 93880 to 93905, 93929 to 94527, 94568 to 94577, 152491 to 152555, 152821 to 152823, 153086 to 153210, 183060 to 183146 and 189949 to 190065)										
		392058	CARBURETOR AND ADAPTER ASSEMBLY—(Stromberg Model PD 12H3) (Wright Part No. 111544N5).....	1	–	–	–	–	–	–	–	–	–
		395093	CARBURETOR AND ADAPTER ASSEMBLY—(Stromberg Model PD 12H3) (Wright Part No. 111544N14).....	–	–	1	–	–	–	–	–	–	–
		392472	CARBURETOR AND ADAPTER ASSEMBLY—(Stromberg Model PD 12K4) (Wright Part No. 115928N1).....	–	–	–	1	–	–	–	–	–	–
		395563-3	CARBURETOR AND ADAPTER ASSEMBLY—(Stromberg Model PD 12H2) (Wright Part No. 110444N1).....	–	–	–	–	1	–	1	–	–	1
51	4702	64280	BUSHING—Carburetor adapter thermometer bulb connection.....	–	–	1	1	1	1	1	–	–	1
		93D18	PLUG—Carburetor adapter thermometer bulb connection substituting.....	–	–	1	1	1	1	1	–	–	1
		AN900-10	GASKET—Carburetor adapter thermometer bulb connection substituting plug (Wright Part No. 23D16).....	–	–	1	1	1	1	1	–	–	1
51	4704	68513	GASKET—Carburetor adapter.....	1	1	1	1	1	1	1	1	1	1

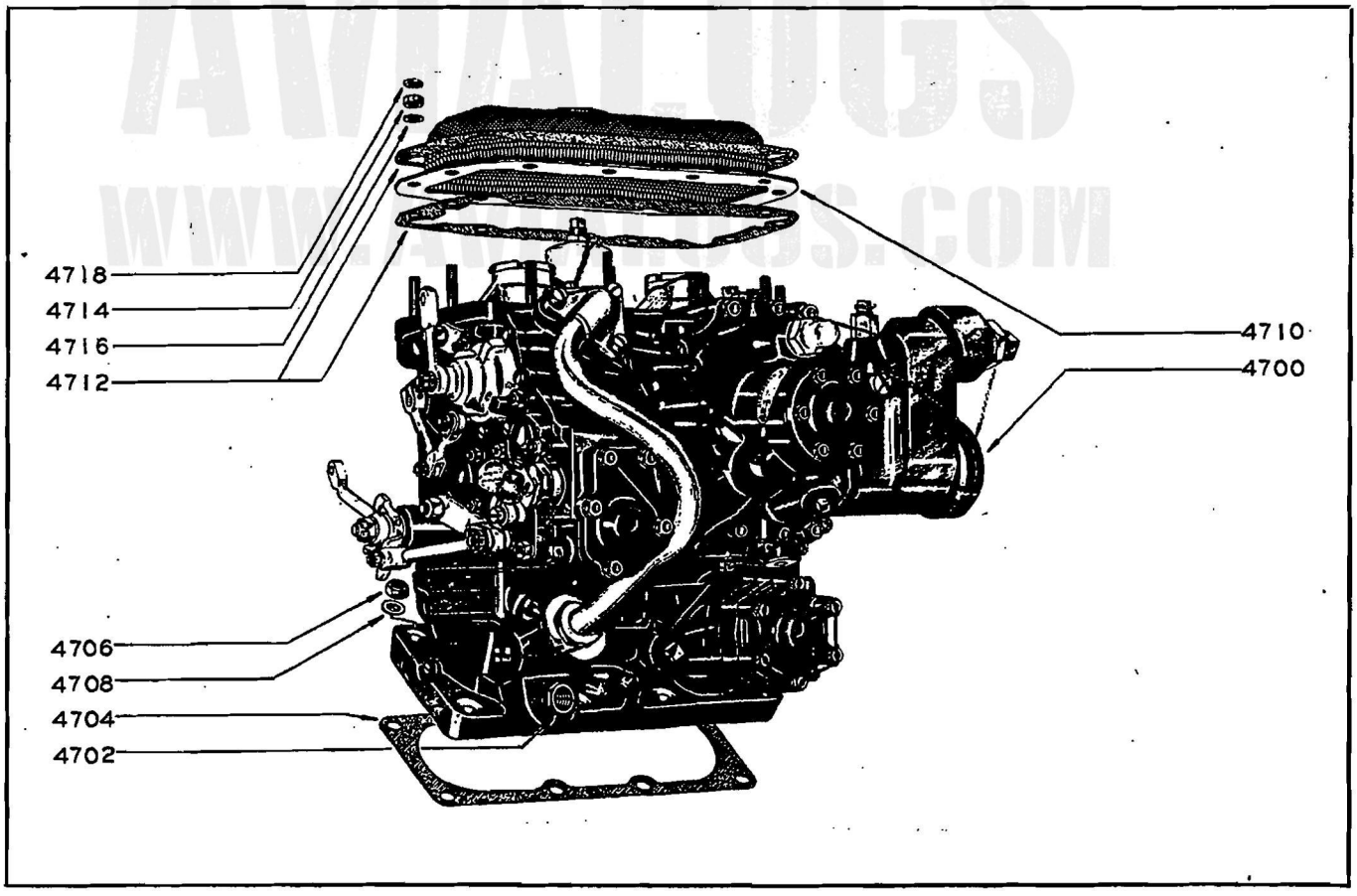

Numbers shown are index numbers and are numerically arranged in the Group Assembly Parts List

Figure 51—Carburetor

Fig. No.	Index Number	Part Number	Nomenclature 1 2 3 4 5 6 7	Units Per Assy—Model R1820 -40	-40B	-54	-60	-65	-71	-73	-87	-95	-97
51	4706	4040D6	NUT—Carburetor adapter to supercharger rear housing..... *4040D6 supersedes and is supplied for replacement of 2101D5 supplied on some early engines.*	8	8	8	8	8	8	8	8	8	8
51	4708	2093D7	WASHER—Carburetor adapter to supercharger rear housing.....	8	8	8	8	8	8	8	8	8	8
		120235N1	TUBE—Carburetor vapor vent..... *Factory installed on the following engines: -54* (86839 to 86866, 429167 to 429376 and 452267 to 452378)	–	–	1	–	–	–	–	–	–	–
		172D6	NIPPLE—Carburetor air vent..... *Used with tube 120235N1.*	–	–	1	–	–	–	–	–	–	–
		895-30	TEE—Carburetor air vent (Wright Part No. 174D8)..... *Used with tube 120235N1.*	–	–	1	–	–	–	–	–	–	–
		810-C45-4D	ELBOW—Carburetor air vent (Wright Part No. 2061D18)..... *Used with tube 120235N1.*	–	–	1	–	–	–	–	–	–	–
		2062D17	ELBOW—Carburetor air vent..... *Used with tube 120235N1.*	–	–	1	–	–	–	–	–	–	–
			CARBURETOR AIR INLET SCREEN AND AIR SCOOP ATTACHING PARTS										
		413638	SCREEN ASSEMBLY COMPLETE—Carburetor air inlet.....	–	–	–	–	1	–	–	–	–	1
51	4710	413817	SCREEN ASSEMBLY COMPLETE—Carburetor air inlet.....	1	1	1	1	–	1	1	1	1	–
		* 110901	SCREEN—Carburetor air inlet..... *Part of assembly 413638.*	–	–	–	–	1	–	–	–	–	1
		* 111107	SCREEN—Carburetor air inlet..... *Part of assembly 413817.*	1	1	1	1	–	1	1	1	1	–
		* 68904	FRAME—Carburetor air inlet screen...	2	2	2	2	2	2	2	2	2	2
		* 64255	GROMMET—Carburetor air inlet screen	1	1	1	1	1	1	1	1	1	1
51	4712	68796	GASKET—Carburetor air inlet screen and air scoop.....	2	2	2	2	2	2	2	2	2	2
51	4714	2D40	NUT—Carburetor air scoop to carburetor adapter.....	10	10	10	10	10	10	10	10	10	10
51	4716	34D88	WASHER—Carburetor air scoop to carburetor adapter.....	10	10	10	10	10	10	10	10	10	10
51	4718	356-524	PALNUT—Carburetor air scoop to carburetor adapter nut (Wright Part No. 2000D2).....	10	10	10	10	10	10	10	10	10	10

PRIMING SYSTEM

FIVE POINT PRIMING

Except where otherwise noted all of the parts listed in this group were factory installed on all -40, -65, -73, -87 and -97 engines.

(a)		412666	TUBE ASSEMBLY—Priming system (cylinder No. 1) (approximate developed length of tube 11 in.).....	1	–	–	–	1	–	1	–	–	–

(a) *Factory installed on all -40 and -73 engines, on -87 engines 152555, 153106 to 153210 and 189980 to 190065 and on all -65 engines except 46723 to 47456.*

Fig. No.	Index Number	Part Number	Nomenclature 1 2 3 4 5 6 7	Units Per Assy—Model R1820 -40 -40B -54 -60 -65 -71 -73 -87 -95 -97

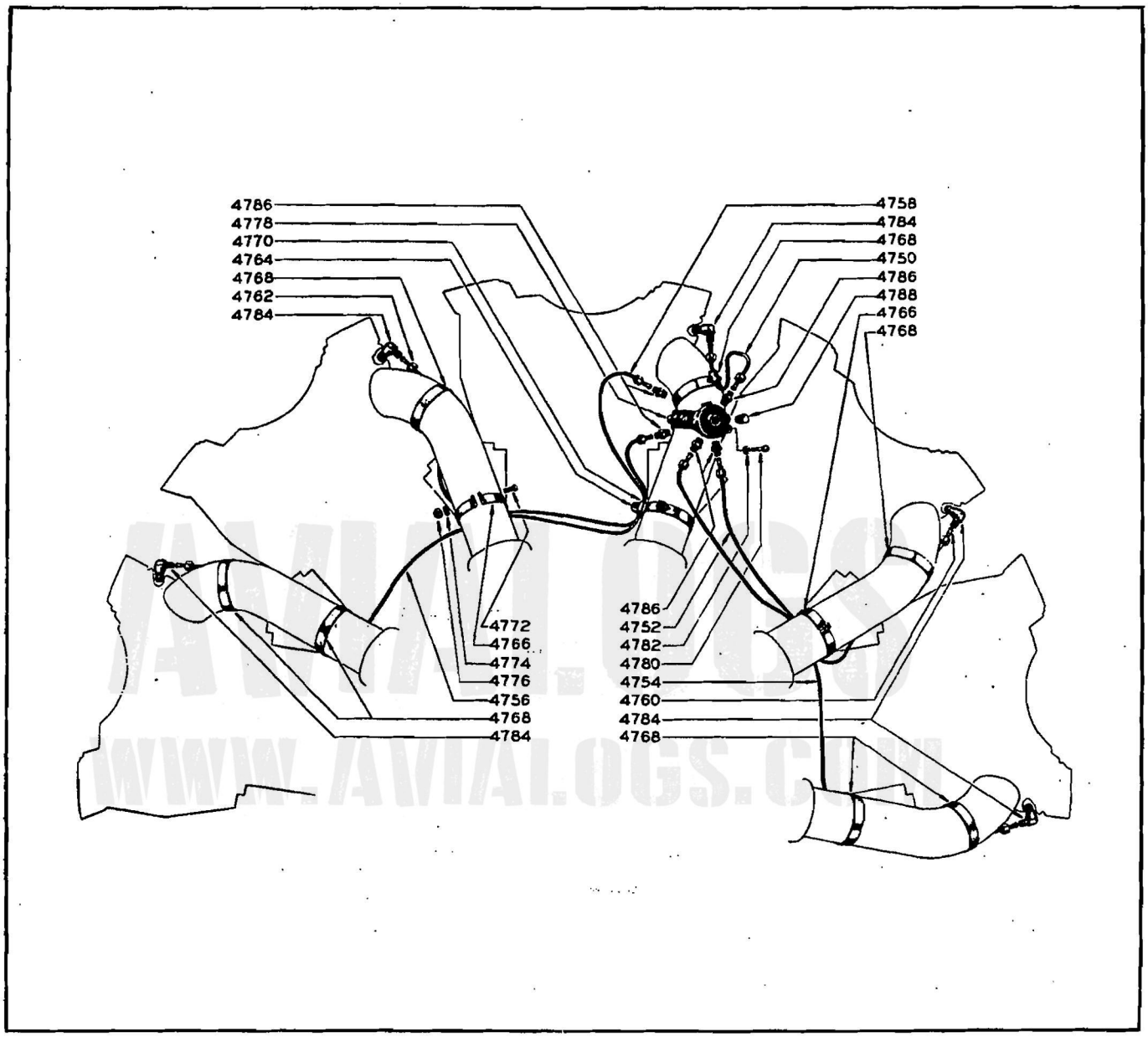

Numbers shown are index numbers and are numerically arranged in the Group Assembly Parts List

Figure 52—Priming System (Five Point Priming)

52	4750	(b) 417947	TUBE ASSEMBLY—Priming system (cylinder No. 1) (approximate developed length of tube 10 in.).....	–	–	–	–	1	–	–	1	–	1
		(a) 412667	TUBE ASSEMBLY—Priming system (cylinder No. 2) (approximate developed length of tube 24 in.).....	1	–	–	–	1	–	1	–	–	–

(a) *Factory installed on all -40 and -73 engines, on -87 engines 152555, 153106 to 153210 and 189980 to 190065 and on all -65 engines except 46723 to 47456.*

(b) *Factory installed on all -97 engines, on -65 engines 46723 to 47456 and on -87 engines 47457 to 47466, 73155 to 73228, 73280 to 73303, 79867 to 80136, 80302 to 80360, 86997 to 87532, 87546 to 87857, 88098 to 88167, 93880 to 94527, 94568 to 94577, 152491 to 152554, 152821 to 152823, 153086 to 153105, 183060 to 183146 and 189949 to 189979.*

Fig. No.	Index Number	Part Number	Nomenclature 1 2 3 4 5 6 7	Units Per Assy—Model R1820 -40	-40B	-54	-60	-65	-71	-73	-87	-95	-97
52	4752	(b) 417948	TUBE ASSEMBLY—Priming system (cylinder No. 2) (approximate developed length of tube 26 in.)	–	–	–	–	1	–	–	1	–	1
		(a) 412670	TUBE ASSEMBLY—Priming system (cylinder No. 3) (approximate developed length of tube 35 in.)	1	–	–	–	1	–	1	–	–	–
52	4754	(b) 417969	TUBE ASSEMBLY—Priming system (cylinder No. 3) (approximate developed length of tube 36 in.)	–	–	–	–	1	–	–	1	–	1
		(a) 412668	TUBE ASSEMBLY—Priming system (cylinder No. 8) (approximate developed length of tube 35 in.)	1	–	–	–	1	–	1	–	–	–
52	4756	(b) 417984	TUBE ASSEMBLY—Priming system (cylinder No. 8) (approximate developed length of tube 35 in.)	–	–	–	–	1	–	–	1	–	1
		(a) 412669	TUBE ASSEMBLY—Priming system (cylinder No. 9) (approximate developed length of tube 25 in.)	1	–	–	–	1	–	1	–	–	–
52	4758	(b) 417968	TUBE ASSEMBLY—Priming system (cylinder No. 9) (approximate developed length of tube 28 in.)	–	–	–	–	1	–	–	1	–	1
		* 65062	TUBE—Priming system *Quantities used: With assembly 412666—11 inches With assembly 417947—10 inches With assembly 412667—24 inches With assembly 417948—26 inches With assembly 412670—35 inches With assembly 417969—36 inches With assembly 412668—35 inches With assembly 417984—35 inches With assembly 412669—25 inches With assembly 417968—28 inches*	#	–	–	–	#	–	#	#	–	#
52	4760	163D20	CONE—Priming system tube	2	–	–	–	2	–	2	2	–	2
52	4762	AN805-2	NUT—Priming system tube (Wright Part No. 163D3)	2	–	–	–	2	–	2	2	–	2
		(a) 69549	CLIP—Priming system tube, single	2	–	–	–	2	–	2	–	–	–
		(a) 69548	CLIP—Priming system tube, double	2	–	–	–	2	–	2	–	–	–
52	4764	(b) 414354	CLIP ASSEMBLY—Priming system tube to intake pipe (with small clip on side)	–	–	–	–	1	–	–	1	–	1
52	4766	414355	CLIP ASSEMBLY—Priming system tube to intake pipe (with small clip on bottom)	–	–	–	–	2	–	–	2	–	2
52	4768	69547	CLIP—Priming system tube, single, parallel. *Quantities used: Six units used for -65 engine 45723 to 47456; four units used for all other -65 engines.*	4	–	–	–	#	–	4	6	–	6
52	4770	65461	GROMMET—Priming system tube clip. *Quantities used: Ten units used for all -65 engines except 46723 to 47456; 12 units used for -65 engines 46723 to 47456.*	10	–	–	–	#	–	10	12	–	12
52	4772	AN520-10-10	SCREW—Priming system tube clip (Wright Part No. 123D5)	12	–	–	–	12	–	12	12	–	12
52	4774	27D24	WASHER—Priming system tube clip	12	–	–	–	12	–	12	12	–	12
52	4776	2087D9	NUT—Priming system tube clip	12	–	–	–	12	–	12	12	–	12
52	4778	68664	DISTRIBUTOR—Priming system	1	–	–	–	1	–	1	1	–	1
52	4780	150D9	SCREW—Priming system distributor to intake pipe	2	–	–	–	2	–	2	2	–	2

(a) *Factory installed on all -40 and -73 engines, on -87 engines 152555, 153106 to 153210 and 189980 to 190065 and on all -65 engines except 46723 to 47456.*

(b) *Factory installed on all -97 engines, on -65 engines 46723 to 47456 and on -87 engines 47457 to 47466, 73155 to 73228, 73280 to 73303, 79867 to 80136, 80302 to 80360, 86997 to 87532, 87546 to 87857, 88098 to 88167, 93880 to 94527, 94568 to 94577, 152491 to 152554, 152821 to 152823, 153086 to 153105, 183060 to 183146 and 189949 to 189979.*

Fig. No.	Index Number	Part Number	Nomenclature 1 2 3 4 5 6 7	Units Per Assy—Model R1820 -40	-40B	-54	-60	-65	-71	-73	-87	-95	-97
52	4782	27D24	WASHER—Priming system distributor to intake pipe.....	2	–	–	–	2	–	2	2	–	2
52	4784	AN4023-1	ELBOW—Priming system tube to cylinder head (Wright Part No. 163D13).....	5	–	–	–	5	–	5	5	–	5
52	4786	AN780-2	NIPPLE—Priming system tube to distributor (Wright Part No. 163D15).....	5	–	–	–	5	–	5	5	–	5
52	4788	4042D1	PLUG—Priming system distributor, pipe....	4	–	–	–	4	–	4	4	–	4

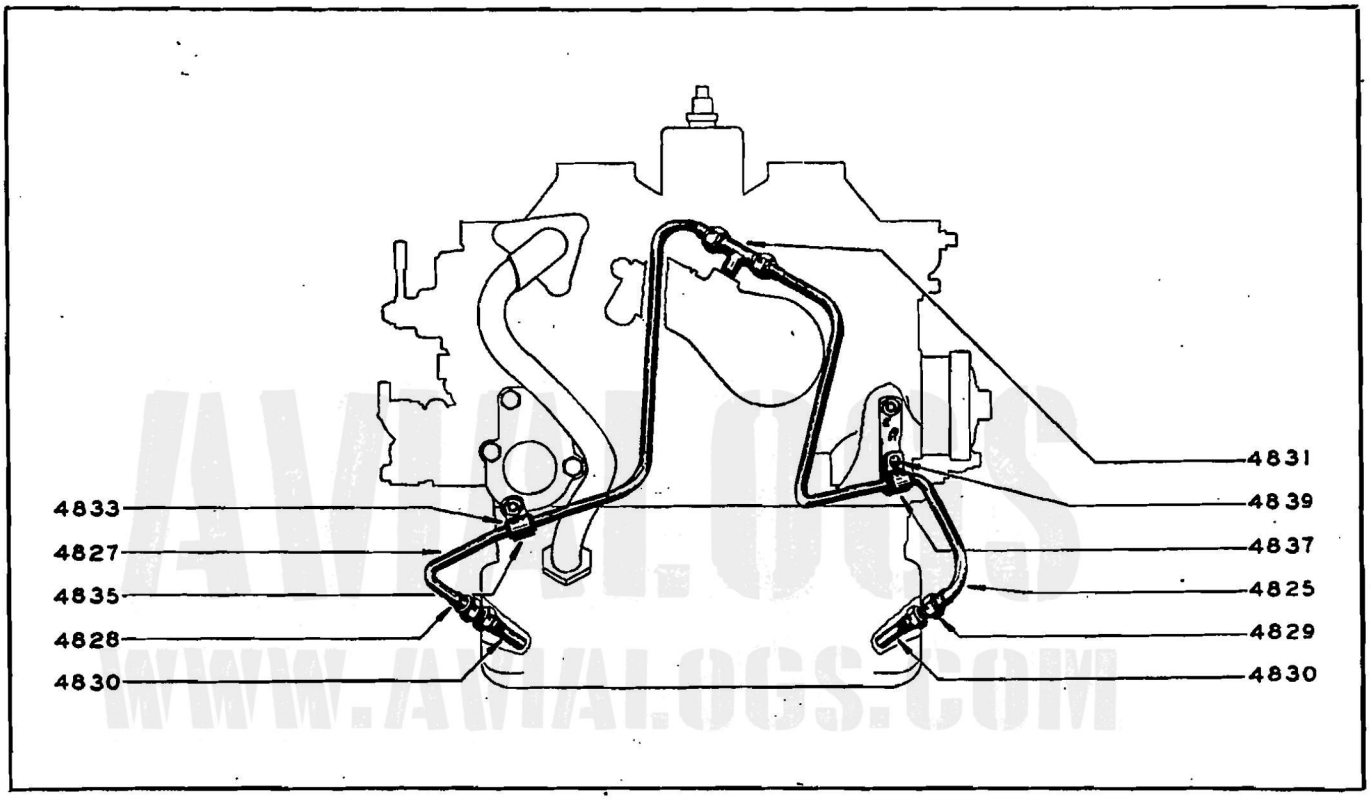

Numbers shown are index numbers and are numerically arranged in the Group Assembly Parts List

Figure 53—Priming System (Two Point Priming) (R1820-54)

TWO POINT PRIMING

All of the parts listed in this group were factory installed on all -54 engines.

53	4825	421111	TUBE ASSEMBLY—Priming valve to carburetor adapter (RH priming connection).....	–	–	1	–	–	–	–	–	–	–
53	4827	421112	TUBE ASSEMBLY—Priming valve to carburetor adapter (LH priming connection).....	–	–	1	–	–	–	–	–	–	–
		* 126076	TUBE—Priming valve to carburetor adapter..... *Part of assembly 421111.*	–	–	1	–	–	–	–	–	–	–
		* 126077	TUBE—Priming valve to carburetor adapter..... *Part of assembly 421112.*	–	–	1	–	–	–	–	–	–	–
		@ 157D10	CONE—Priming valve to carburetor adapter tube (early type)..... *Superseded by 157D16.*	–	–	2	–	–	–	–	–	–	–
53	4828	157D16	CONE—Priming valve to carburetor adapter tube (late type).....	–	–	2	–	–	–	–	–	–	–

Fig. No.	Index Number	Part Number	Nomenclature 1 2 3 4 5 6 7	Units Per Assy—Model R1820 -40	-40B	-54	-60	-65	-71	-73	-87	-95	-97
53	4829	AN805-4	NUT—Priming valve to carburetor adapter tube (Wright Part No. 156D3)	–	–	2	–	–	–	–	–	–	–
53	4830	163D85	NIPPLE—Carburetor adapter to priming tube	–	–	2	–	–	–	–	–	–	–
53	4831	186D8	TEE—Priming valve	–	–	1	–	–	–	–	–	–	–
53	4833	115280	PACKING—Carburetor adapter priming tube attaching clip	–	–	2	–	–	–	–	–	–	–
53	4835	126109	CLAMP—Priming valve to carburetor adapter tube (LH)	–	–	1	–	–	–	–	–	–	–
53	4837	126034	CLAMP—Priming valve to carburetor adapter tube (RH)	–	–	1	–	–	–	–	–	–	–
53	4839	AN520-10-8	SCREW—Priming valve to carburetor adapter tube clamp (RH tube) (Wright Part No. 123D1)	–	–	1	–	–	–	–	–	–	–
		2087D9	NUT—Priming valve to carburetor adapter tube clamp (RH tube)	–	–	1	–	–	–	–	–	–	–

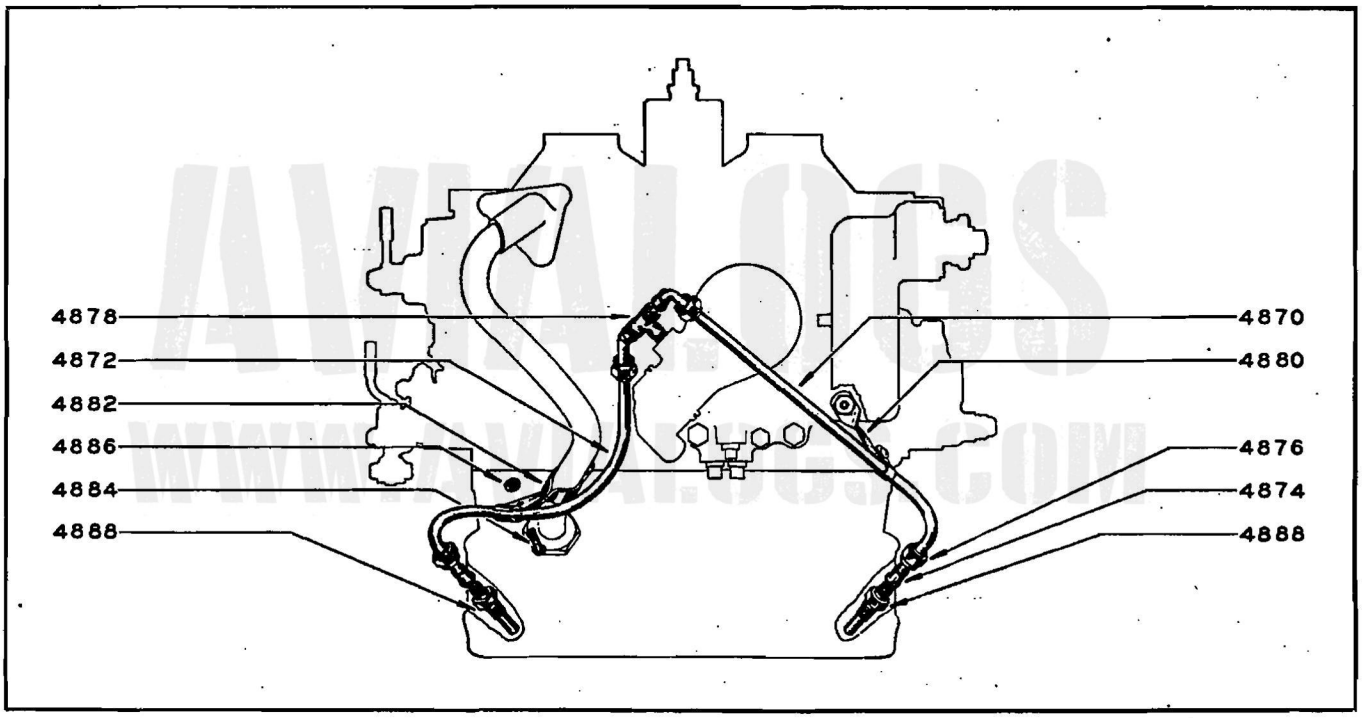

Numbers shown are index numbers and are numerically arranged in the Group Assembly Parts List

Figure 54—Priming System (Two Point Priming) (R1820-60)

TWO POINT PRIMING

All of the parts listed in this group were factory installed on all -60 engines.

Fig. No.	Index Number	Part Number	Nomenclature 1 2 3 4 5 6 7	Units Per Assy—Model R1820 -40	-40B	-54	-60	-65	-71	-73	-87	-95	-97
		@ 420034	TUBE ASSEMBLY—Priming valve to carburetor adapter (RH priming connection)	–	–	–	1	–	–	–	–	–	–
			Superseded by 424787.										
54	4870	424787	TUBE ASSEMBLY—Priming valve to carburetor adapter (RH priming connection)	–	–	–	1	–	–	–	–	–	–
		@ 420035	TUBE ASSEMBLY—Priming valve to carburetor adapter (LH priming connection)	–	–	–	1	–	–	–	–	–	–
			Superseded by 424788.										

Fig. No.	Index Number	Part Number	Nomenclature 1 2 3 4 5 6 7	Units Per Assy—Model R1820 -40	-40B	-54	-60	-65	-71	-73	-87	-95	-97
54	4872	424788	TUBE ASSEMBLY—Priming valve to carburetor adapter (LH priming connection)	–	–	–	1	–	–	–	–	–	–
		* 117962	TUBE—Priming valve to carburetor adapter (RH priming connection) *Part of assembly 420034.*	–	–	–	1	–	–	–	–	–	–
		* 132067	TUBE—Priming valve to carburetor adapter (RH priming connection) *Part of assembly 424787.*	–	–	–	1	–	–	–	–	–	–
		* 117963	TUBE—Priming valve to carburetor adapter (LH priming connection) *Part of assembly 420035.*	–	–	–	1	–	–	–	–	–	–
		* 132068	TUBE—Priming valve to carburetor adapter (LH priming connection) *Part of assembly 424788.*	–	–	–	1	–	–	–	–	–	–
54	4874	157D16	CONE—Priming valve to carburetor adapter tube	–	–	–	2	–	–	–	–	–	–
54	4876	AN805-4	NUT—Priming valve to carburetor adapter tube (Wright Part No. 156D3)	–	–	–	2	–	–	–	–	–	–
54	4878	186D8	TEE—Electric primer to priming tubes	–	–	–	1	–	–	–	–	–	–
		@ 117960	CLAMP—Priming valve to carburetor adapter tube, RH *Superseded by 132514.*	–	–	–	1	–	–	–	–	–	–
54	4880	132514	CLAMP—Priming valve to carburetor adapter tube, RH	–	–	–	1	–	–	–	–	–	–
		@ 117961	CLAMP—Priming valve to carburetor adapter tube, LH *Superseded by 132125.*	–	–	–	2	–	–	–	–	–	–
54	4882	132125	CLAMP—Priming valve to carburetor adapter tube, LH	–	–	–	2	–	–	–	–	–	–
54	4884	AN520-10-8	SCREW—Priming valve to carburetor adapter tube clamp (Wright Part No. 123D1)	–	–	–	3	–	–	–	–	–	–
54	4886	2087D9	NUT—Priming valve to carburetor adapter tube clamp *Supersedes 2087D6.*	–	–	–	3	–	–	–	–	–	–
54	4888	163D63	NIPPLE—Carburetor adapter to priming tube	–	–	–	2	–	–	–	–	–	–
			PRIMING TUBE FITTINGS *Except where otherwise noted all of the parts listed in this group are used on all -40B, -71 and -95 engines.*										
		AN780-4	NIPPLE—Priming system tube to supercharger front housing (Wright Part No. 158D4)	–	–	–	–	–	1	–	–	1	–
		159D3	ELBOW—Priming system tube to supercharger front housing	–	1	–	–	–	–	–	–	–	–
		AN805-4	NUT—Priming system tube elbow (Wright Part No. 156D3)	–	1	–	–	–	1	–	–	1	–
		AN800-4	CONE—Priming system tube elbow (Wright Part No. 157D3)	–	1	–	–	–	1	–	–	1	–
		163D55	PLUG—Priming system discharge	–	1	–	–	–	1	–	–	1	–
			GUN SYNCHRONIZER IMPULSE GENERATOR (TYPE E-4) *Except where otherwise noted all of the parts listed in this group were factory installed on all of the following engines:* *-40* (31651 to 31668, 31676 to 31704, 31706 and 31712 to 31722) *-95* (31741 to 31748, 31750 to 31752, 31805, 31812, 31814, 31818 and 80373 to 80376)										
		@ 414446	GENERATOR ASSEMBLY COMPLETE—Gun synchronizer impulse, RH *Factory installed on all -40 engines. Superseded by 417520.*	1	–	–	–	–	–	–	–	–	–
		@ 414486	GENERATOR ASSEMBLY COMPLETE—Gun synchronizer impulse, RH *Factory installed on all -95 engines. Superseded by 417217*	–	–	–	–	–	–	–	–	1	–

AVIALOGS WWW.AVIALOGS.COM

Fig. No.	Index Number	Part Number	Nomenclature 1 2 3 4 5 6 7	Units Per Assy—Model R1820 -40	-40B	-54	-60	-65	-71	-73	-87	-95	-97
		@ 414447	GENERATOR ASSEMBLY COMPLETE— Gun synchronizer impulse, LH..... *Factory installed on all -40 engines.* *Superseded by 417531.*	1	–	–	–	–	–	–	–	–	–
		@ 414487	GENERATOR ASSEMBLY COMPLETE— Gun synchronizer impulse, LH..... *Factory installed on all -95 engines.* *Superseded by 417652.*	–	–	–	–	–	–	–	–	1	–
		417520	GENERATOR ASSEMBLY COMPLETE— Gun synchronizer impulse, RH..... *Not factory installed on any -40 engines.* *417520 supersedes and is supplied for replacement of 414446.*	1	–	–	–	–	–	–	–	–	–
		417217	GENERATOR ASSEMBLY COMPLETE— Gun synchronizer impulse, RH..... *Not factory installed on any -95 engines.* *417217 supersedes and is supplied for replacement of 414486.*	–	–	–	–	–	–	–	–	1	–
		417531	GENERATOR ASSEMBLY COMPLETE— Gun synchronizer impulse, LH..... *Not factory installed on any -40 engines.* *417531 supersedes and is supplied for replacement of 414447.*	1	–	–	–	–	–	–	–	–	–
		417652	GENERATOR ASSEMBLY COMPLETE— Gun synchronizer impulse, LH..... *Not factory installed on any -95 engines.* *417652 supersedes and is supplied for replacement of 414487.*	–	–	–	–	–	–	–	–	1	–

AVIALOGS
WWW.AVIALOGS.COM

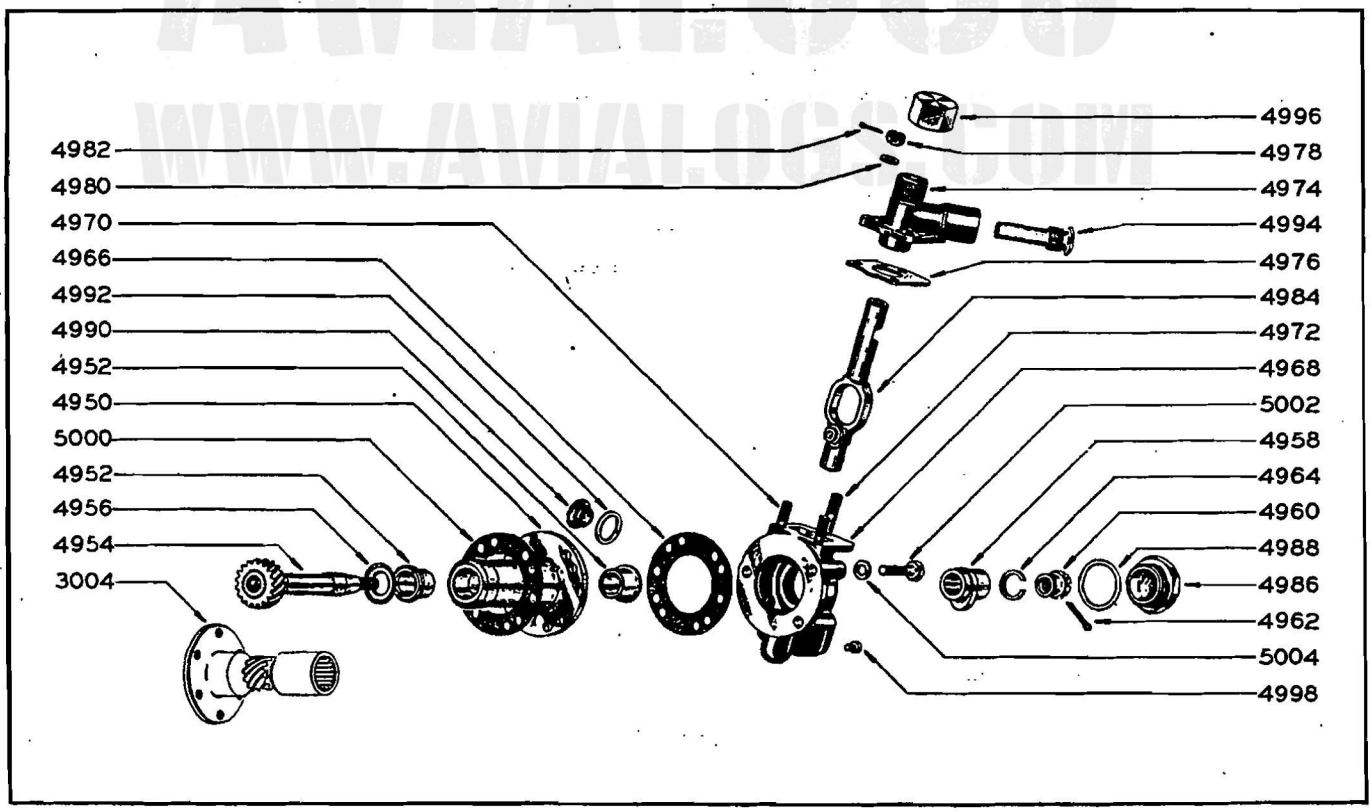

Numbers shown are index numbers and are numerically arranged in the Group Assembly Parts List

Figure 55—Gun Synchronizer Impulse Generator (Type E-4)

Fig. No.	Index Number	Part Number	Nomenclature 1 2 3 4 5 6 7	Units Per Assy—Model R1820 -40	-40B	-54	-60	-65	-71	-73	-87	-95	-97
		411413	SUPPORT ASSEMBLY—Gun synchronizer impulse generator drive shaft *Part of assemblies 414446, 414447, 414486 and 414487.* *411413 is 3.627 in. long.*	1	–	–	–	–	–	–	–	1	–
55	4950	417437	SUPPORT ASSEMBLY—Gun synchronizer impulse generator drive shaft *Part of assemblies 417217, 417520, 417531 and 417652.* *417437 is 3.488 in. long.*	1	–	–	–	–	–	–	–	1	–
		* 68020	SUPPORT—Gun synchronizer impulse generator drive shaft... *Part of assembly 411413.*	1	–	–	–	–	–	–	–	1	–
		* 115488	SUPPORT—Gun synchronizer impulse generator drive shaft... *Part of assembly 417437.*	1	–	–	–	–	–	–	–	1	–
		68019	BUSHING—Gun synchronizer impulse generator drive shaft (1.125 in. long)..... *Part of assembly 411413.*	2	–	–	–	–	–	–	–	2	–
55	4952	115480	BUSHING—Gun synchronizer impulse generator drive shaft (.44 in. long)..... *Part of assembly 417437.*	2	–	–	–	–	–	–	–	2	–
		@ 49021	SHAFT ASSEMBLY—Gun synchronizer impulse generator drive..... *Part of assemblies 414446, 414447, 414486 and 414487.* *49021 has an integral gear.* *For replacement, make the following substitutions:* Use Description Remove Quant. *417441 Shaft and Gear Assembly—Gun synchronizer impulse generator drive 49021 1* *417437 Support Assembly—Gun synchronizer impulse generator drive shaft 411413 1* *115482 Washer—Gun synchronizer impulse generator drive shaft thrust 1*	1	–	–	–	–	–	–	–	1	–
55	4954	417441	SHAFT AND GEAR ASSEMBLY—Gun synchronizer impulse generator drive..... *Part of assemblies 417217, 417520, 417531 and 417652.* *417441 includes a spline fit bronze gear.*	1	–	–	–	–	–	–	–		–
		* 65285	SHAFT—Gun synchronizer impulse generator drive..... *Part of assembly 49021.*	1	–	–	–	–	–	–	–	1	–
		* 115486	SHAFT—Gun synchronizer impulse generator drive..... *Part of assembly 417441.*	1	–	–	–	–	–	–	–	1	–
		* 115483	GEAR—Gun synchronizer impulse generator drive shaft..... *Part of assembly 417441.*	1	–	–	–	–	–	–	–	1	–
		* 28950	PLUG—Gun synchronizer impulse generator drive shaft..... *Part of assembly 49021.*	1	–	–	–	–	–	–	–	1	–
		* 115480	PLUG—Gun synchronizer impulse generator drive shaft..... *Part of assembly 417441.*	1	–	–	–	–	–	–	–	1	–
55	4956	115482	WASHER—Gun synchronizer impulse generator drive shaft thrust..... *Part of assemblies 417217, 417520, 417531 and 417652.*	1	–	–	–	–	–	–	–	1	–

AVIATIONS
WWW.AVIATIONS.COM

Fig. No.	Index Number	Part Number	Nomenclature 1 2 3 4 5 6 7	Units Per Assy—Model R1820 -40	-40B	-54	-60	-65	-71	-73	-87	-95	-97
55	4958	27508	CAM—Gun synchronizer impulse generator	1	–	–	–	–	–	–	–	1	–
55	4960	27622	NUT—Gun synchronizer impulse generator drive shaft	1	–	–	–	–	–	–	–	1	–
55	4962	59D3	COTTER PIN—Gun synchronizer impulse generator drive shaft nut	1	–	–	–	–	–	–	–	1	–
55	4964	27623	RING—Gun synchronizer impulse generator drive shaft nut, snap	1	–	–	–	–	–	–	–	1	–
55	4966	27471	GASKET—Gun synchronizer impulse generator lower plunger housing	1	–	–	–	–	–	–	–	1	–
55	4968	410870	HOUSING STUDDING ASSEMBLY—Gun synchronizer impulse generator plunger, lower, RH. *Part of assemblies 414446, 414486, 417217 and 417520.*	1	–	–	–	–	–	–	–	1	–
		410871	HOUSING STUDDING ASSEMBLY—Gun synchronizer impulse generator plunger, lower, LH. *Part of assemblies 414447, 414487, 417531 and 417652.*	1	–	–	–	–	–	–	–	1	–
		* 67381	HOUSING—Gun synchronizer impulse generator plunger, lower, RH	1	–	–	–	–	–	–	–	1	–
		* 67382	HOUSING—Gun synchronizer impulse generator plunger, lower, LH	1	–	–	–	–	–	–	–	1	–
55	4970	¢ 2028D7	STUD—Gun synchronizer impulse generator plunger lower housing to upper housing, short	2	–	–	–	–	–	–	–	2	–
		2028H7	STUD—Same as 2028D7 except .003 in. OS OD	AR	–	–	–	–	–	–	–	AR	–
		2028S7	STUD—Same as 2028D7 except .007 in. OS OD	AR	–	–	–	–	–	–	–	AR	–
		2028J7	STUD—Same as 2028D7 except .012 in. OS OD	AR	–	–	–	–	–	–	–	AR	–
55	4972	¢ 2028D15	STUD—Gun synchronizer impulse generator plunger lower housing to upper housing, long	1	–	–	–	–	–	–	–	1	–
		2028H15	STUD—Same as 2028D15 except .003 in. OS OD	AR	–	–	–	–	–	–	–	AR	–
		2028S15	STUD—Same as 2028D15 except .007 in. OS OD	AR	–	–	–	–	–	–	–	AR	–
		2028J15	STUD—Same as 2028D15 except .012 in. OS OD	AR	–	–	–	–	–	–	–	AR	–
		27506	HOUSING—Gun synchronizer impulse generator plunger, upper, RH. *Part of assemblies 414486 and 417217.*	–	–	–	–	–	–	–	–	1	–
		@ 110884	HOUSING—Gun synchronizer impulse generator plunger, upper, RH (early type). *Part of assemblies 414446 and 417520.* *Superseded by 110884N1.*	1	–	–	–	–	–	–	–	–	–
55	4974	110884N1	HOUSING—Gun synchronizer impulse generator plunger, upper, RH (late type). *Part of assemblies 414446 and 417520.*	1	–	–	–	–	–	–	–	–	–
		27507	HOUSING—Gun synchronizer impulse generator plunger, upper, LH. *Part of assemblies 414487 and 417652.*	–	–	–	–	–	–	–	–	1	–
		@ 110883	HOUSING—Gun synchronizer impulse generator plunger, upper, LH (early type). *Part of assemblies 414447 and 417531.* *Superseded by 110883N1.*	1	–	–	–	–	–	–	–	–	–
		110883N1	HOUSING—Gun synchronizer impulse generator plunger, upper, LH (late type). *Part of assemblies 414447 and 417531.*	1	–	–	–	–	–	–	–	–	–

Fig. No.	Index Number	Part Number	Nomenclature 1 2 3 4 5 6 7	Units Per Assy—Model R1820 -40	-40B	-54	-60	-65	-71	-73	-87	-95	-97
55	4976	27513	SHIM—Gun synchronizer impulse generator plunger upper to lower housing	1	–	–	–	–	–	–	–	1	–
55	4978	1D1	NUT—Gun synchronizer impulse generator plunger upper to lower housing	3	–	–	–	–	–	–	–	3	–
55	4980	27D3	WASHER—Gun synchronizer impulse generator plunger upper to lower housing	3	–	–	–	–	–	–	–	3	–
55	4982	57D11	COTTER PIN—Gun synchronizer impulse generator plunger upper to lower housing nut	3	–	–	–	–	–	–	–	3	–
55	4984	44056	PLUNGER ASSEMBLY—Gun synchronizer impulse generator, RH	1	–	–	–	–	–	–	–	1	–
		44057	PLUNGER ASSEMBLY—Gun synchronizer impulse generator, LH	1	–	–	–	–	–	–	–	1	–
		* 27849	PLUNGER—Gun synchronizer impulse generator, RH	1	–	–	–	–	–	–	–	1	–
		* 27850	PLUNGER—Gun synchronizer impulse generator, LH	1	–	–	–	–	–	–	–	1	–
		* 25189	ROLLER—Gun synchronizer impulse generator cam	1	–	–	–	–	–	–	–	1	–
		* 27848	WASHER—Gun synchronizer impulse generator cam roller retaining	1	–	–	–	–	–	–	–	1	–
55	4986	93D20	PLUG—Gun synchronizer impulse generator plunger lower housing (1.125 in.-12)	1	–	–	–	–	–	–	–	1	–
55	4988	AN900-18	GASKET—Gun synchronizer impulse generator plunger lower housing plug (Wright Part No. 23D2)	1	–	–	–	–	–	–	–	1	–
55	4990	2025D2	PLUG—Gun synchronizer impulse generator plunger lower housing (.625 in.-18)	1	–	–	–	–	–	–	–	1	–
55	4992	AN900-10	GASKET—Gun synchronizer impulse generator plunger lower housing plug (Wright Part No. 23D16)	1	–	–	–	–	–	–	–	1	–
		23756	PLUG—Gun synchronizer impulse generator cable replacement *Part of assemblies 414486, 414487, 417217 and 417652.*	–	–	–	–	–	–	–	–	1	–
55	4994	110882	PLUG—Gun synchronizer impulse generator calbe replaeement *Part of assemblies 414446, 414447, 417520 and 417531.*	1	–	–	–	–	–	–	–	–	–
55	4996	20513	COVER—Gun synchronizer impulse generator operating cable replacement	1	–	–	–	–	–	–	–	1	–
		61618	PLATE—Gun synchronizer impulse generator data	1	–	–	–	–	–	–	–	1	–
55	4998	86D5	SCREW—Gun synchronizer impulse generator data plate	2	–	–	–	–	–	–	–	2	–
55	5000	27471	GASKET—Gun synchronizer impulse generator drive shaft support	2	–	–	–	–	–	–	–	2	–
55	5002	22D6	SCREW—Gun synchronizer impulse generator to supercharger rear housing	6	–	–	–	–	–	–	–	6	–
55	5004	27D1	WASHER—Gun synchronizer impulse generator to supercharger rear housing	6	–	–	–	–	–	–	–	6	–

GUN SYNCHRONIZER IMPULSE GENERATOR AND DRIVES (TYPE E-8)

Except where otherwise noted all of the parts listed in this group were factory installed on all -60, -65 and -73 engines and on the following engines:
-40 (31669 to 31674, 31705, 31707 to 31711, 45777 to 45876, 45879 to 45928, 45932 to 45934, 94528 to 94567, 152790 to 152799, 152818 to 152820 and 152854 to 152943)

Fig. No.	Index Number	Part Number	Nomenclature 1 2 3 4 5 6 7	Units Per Assy—Model R1820 -40 -40B -54 -60 -65 -71 -73 -87 -95 -97

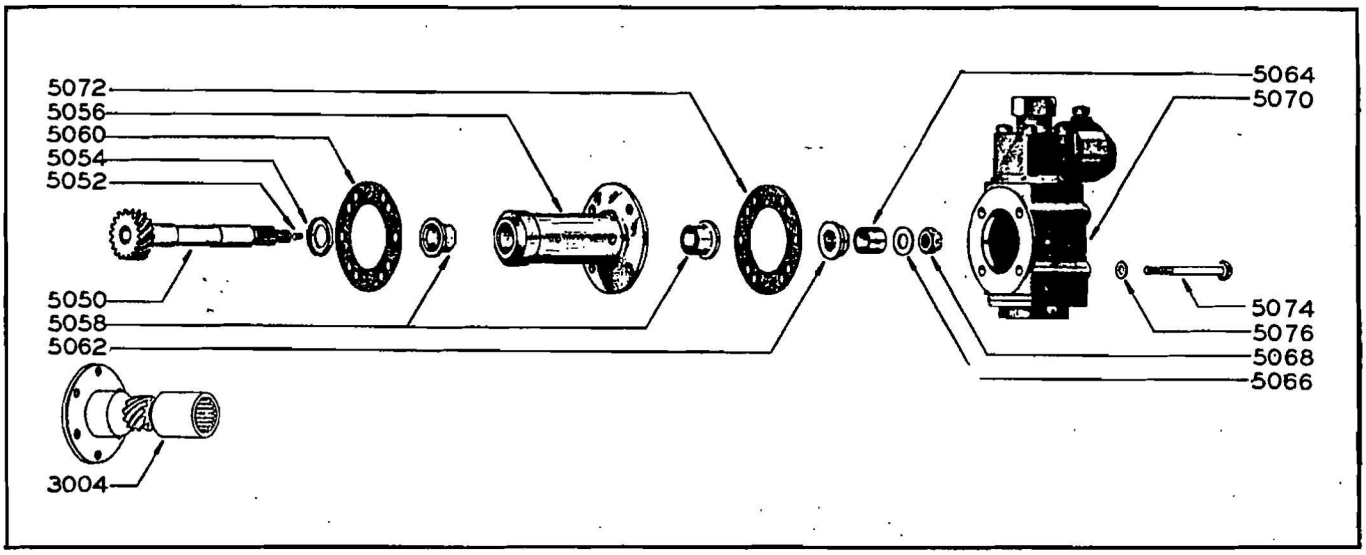

Numbers shown are index numbers and are numerically arranged in the Group Assembly Parts List

Figure 56—Gun Synchronizer Impulse Generator and Drive (Type E-8)

@ 410741 SHAFT ASSEMBLY—Gun synchronizer impulse generator drive..... 2 - - - - - - 2 - - -

Factory installed on all -73 engines and on the following engines:
-40 (31669 to 31674, 31705, 31707 to 31711, 45777 to 45876, 45879 to 45928, 45932 to 45934 and 152790 to 152799)

410741 has an integral gear.

For replacement, make the following substitutions:

Use	Description	Remove	Quant.
417438	*Shaft and Gear Assembly—Gun synchronizer impulse generator drive*	*410741*	*1*
417436	*Support Machining Assembly—Gun synchronizer impulse generator drive shaft*	*412523*	*1*
115482	*Washer—Gun synchronizer impulse generator drive shaft thrust*		*1*

@ 410740 SHAFT ASSEMBLY—Gun synchronizer impulse generator drive..... - - - - 2 - - - - -

Factory installed on the following engines:
-65 (29347, 29898 to 29997, 30018 to 30050, 41102 to 41122, 41124 to 41133, 41136 to 41267, 44242 to 44295, 44311 to 45387, 45394 to 45399, 45401 to 45474, 45939 to 47072 and 47123 to 47400)

410740 has an integral gear.

For replacement, make the following substitutions:

Use	Description	Remove	Quant.
417439	*Shaft and Gear Assembly—Gun synchronizer impulse generator drive*	*410740*	*1*

AVIATIONS
WWW.AVIATIONS.COM

Fig. No.	Index Number	Part Number	Nomenclature 1 2 3 4 5 6 7	Units Per Assy—Model R1820 -40	-40B	-54	-60	-65	-71	-73	-87	-95	-97
			417436 Support Machining Assembly—Gun synchronizer impulse generator drive shaft 412523 1										
			115482 Washer—Gun synchronizer impulse generator drive shaft thrust 1										
56	5050	417438	SHAFT AND GEAR ASSEMBLY—Gun synchronizer impulse generator drive.. *Factory installed on all -60 engines and on the following engines:* -40 (94528 to 94567, 152818 to 152820 and 152854 to 152943) *417438 includes a spline fit bronze gear.*	2	–	–	2	–	–	2	–	–	–
		417439	SHAFT AND GEAR ASSEMBLY—Gun synchronizer impulse generator drive.. *Factory installed on the following engines:* -65 (47073 to 47122 and 47401 to 47456)	–	–	–	–	2	–	–	–	–	–
		* 67836	SHAFT—Gun synchronizer impulse generator drive..... *Part of assembly 410741.*	1	–	–	–	–	–	1	–	–	–
		* 67837	SHAFT—Gun synchronizer impulse generator drive..... *Part of assembly 410740.*	–	–	–	–	1	–	–	–	–	–
		* 115487	SHAFT—Gun synchronizer impulse generator drive..... *Part of assemblies 417438 and 417439.*	1	–	–	1	1	–	1	–	–	–
		* 115483	GEAR—Gun synchronizer impulse generator drive shaft..... *Part of assembly 417438.*	1	–	–	1	–	–	1	–	–	–
		* 115484	GEAR—Gun synchronizer impulse generator drive shaft..... *Part of assembly 417439.*	–	–	–	–	1	–	–	–	–	–
56	5052	2034D11	PLUG—Gun synchronizer impulse generator drive shaft.....	1	–	–	1	1	–	1	–	–	–
56	5054	115482	WASHER—Gun synchronizer impulse generator drive shaft thrust..... *Used with assemblies 417438 and 417439.*	2	–	–	2	2	–	2	–	–	–
		412523	SUPPORT MACHINING ASSEMBLY—Gun synchronizer impulse generator drive shaft..... *Used with shafts 410740 and 410741.* *412523 is 3.816 in. long.*	2	–	–	–	2	–	2	–	–	–
56	5056	417436	SUPPORT MACHINING ASSEMBLY—Gun synchronizer impulse generator drive shaft..... *Used with shafts 417438 and 417439.* *417436 is 3.668 in. long.*	2	–	–	2	2	–	2	–	–	–
		* 68720	SUPPORT—Gun synchronizer impulse generator drive shaft..... *Part of assembly 412523.*	1	–	–	–	1	–	1	–	–	–
		* 115489	SUPPORT—Gun synchronizer impulse generator drive shaft..... *Part of assembly 417436.*	1	–	–	1	1	–	1	–	–	–
		68019	BUSHING—Gun synchronizer impulse generator drive shaft (1.125 in. long)..... *Part of assembly 412523.*	2	–	–	–	2	–	2	–	–	–
56	5058	115480	BUSHING—Gun synchronizer impulse generator drive shaft (.44 in. long) *Part of assembly 417436.*	2	–	–	2	2	–	2	–	–	–
		102D1	PLUG—Gun synchronizer impulse generator drive shaft support oil drain hole.....	3	–	–	3	3	–	3	–	–	–

Fig. No.	Index Number	Part Number	Nomenclature 1 2 3 4 5 6 7	Units Per Assy—Model R1820 -40	-40B	-54	-60	-65	-71	-73	-87	-95	-97
56	5060	27471	GASKET—Gun synchronizer impulse generator drive shaft support	2	–	–	2	2	–	2	–	–	–
56	5062	69620	SLEEVE—Gun synchronizer impulse generator drive shaft	2	–	–	2	2	–	2	–	–	–
56	5064	2097D10	SPACER—Gun synchronizer impulse generator drive shaft	2	–	–	2	2	–	2	–	–	–
56	5066	27D125	WASHER—Gun synchronizer impulse generator drive shaft	2	–	–	2	2	–	2	–	–	–
56	5068	2101D5	NUT—Gun synchronizer impulse generator drive shaft retaining	2	–	–	2	2	–	2	–	–	–
		66131	COVER—Gun synchronizer impulse generator substituting *Factory installed on all -65 and -73 engines and on the following engines:* *-40* (31669 to 31674, 31705, 31707 to 31711, 94528 to 94567, 152790 to 152799 and 152854 to 152943) *-60* (47468, 47469, 73229 to 73279, 73304 to 73429, 73432 to 73914, 80137 to 80279, 88168 to 88196, 155703 to 155817, 155824 to 155879, 156289 to 158093, 183147 to 183464, 425321 to 426720, 454477 to 455061 and 455070 to 455359) *66131 is .26 in. thick through the attaching holes.*	2	–	–	2	2	–	2	–	–	–
		@ 118969	COVER—Gun synchronizer impulse generator substituting (early type) *Factory installed on the following engines:* *-60* (455062 to 455069 and 455360 to 455407) *118969 is 2.047 in. thick through the attaching holes.* *Superseded by 118969N2.*	–	–	–	2	–	–	–	–	–	–
		118969N2	COVER—Gun synchronizer impulse generator substituting (late type) *Not factory installed on any engines.* *Supersedes 118969.* *118969N2 is 2.047 in. thick through the attaching holes.*	–	–	–	2	–	–	–	–	–	–
56	5070	114081N1	GENERATOR—Gun synchronizer impulse. *Factory installed on the following engines:* *-40* (45777 to 45876, 45879 to 45928, 45932 to 45934 and 152818 to 152820)	2	–	–	–	–	–	–	–	–	–
56	5072	27471	GASKET—Gun synchronizer impulse generator or substituting cover	2	–	–	2	2	–	2	–	–	–
		22D34	SCREW—Gun synchronizer impulse generator to supercharger rear housing (.250 in.-20 U.S.F. x 2.60 in.)	8	–	–	–	–	–	–	–	–	–
		22D1	SCREW—Gun synchronizer impulse generator substituting cover to supercharger rear housing (.250 in.-20 U.S.F. x 1 in.) *Used with cover 66131.*	8	–	–	8	8	–	8	–	–	–
56	5074	22D30	SCREW—Gun synchronizer impulse generator substituting cover to supercharger rear housing (.250 in.-20 U.S.F. x 2.75 in.) *Used with cover 118969 or 118969N2.*	–	–	–	8	–	–	–	–	–	–
56	5076	27D1	WASHER—Gun synchronizer impulse generator or substituting cover to supercharger rear housing	8	–	–	8	8	–	8	–	–	–

AVIALOGS
WWW.AVIALOGS.COM

Fig. No.	Index Number	Part Number	Nomenclature 1 2 3 4 5 6 7	Units Per Assy—Model R1820 -40 -40B -54 -60 -65 -71 -73 -87 -95 -97

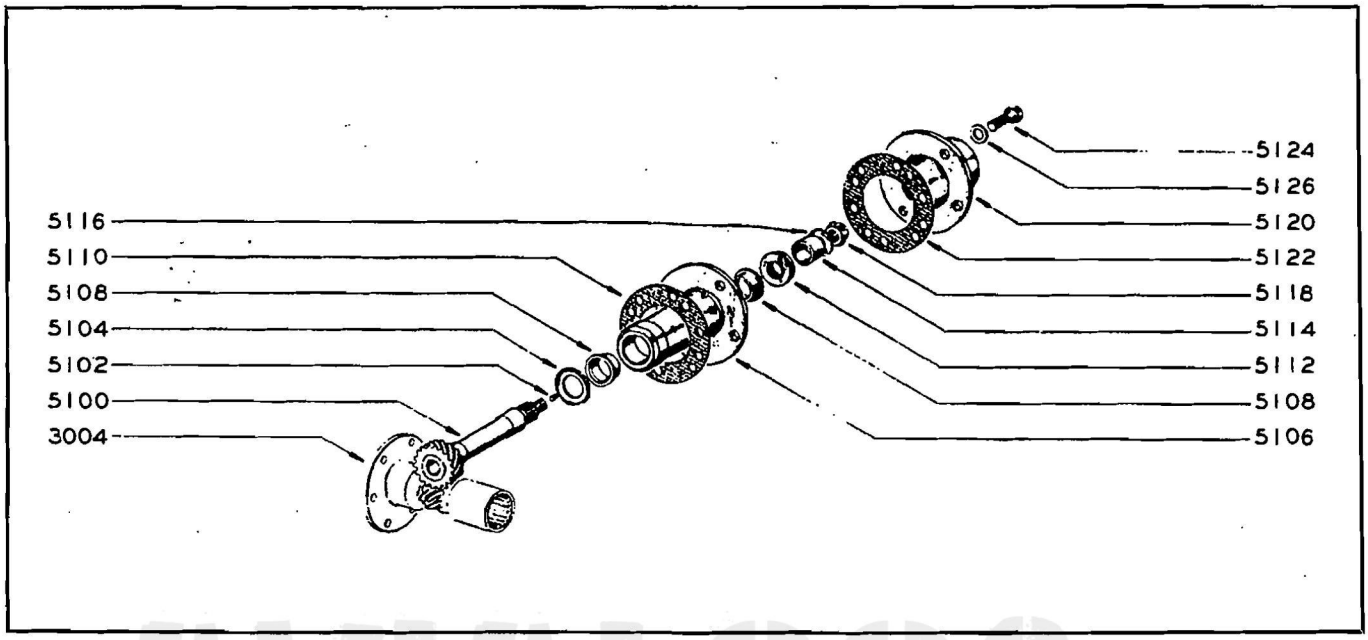

Numbers shown are index numbers and are numerically arranged in the Group Assembly Parts List

Figure 57—Gun Synchronizer Impulse Generator Drive (For Type E-8 Generator)

GUN SYNCHRONIZER IMPULSE GENERATOR DRIVE (FOR TYPE E-8 GENERATOR) (ONE GUN DRIVE)

Except where otherwise noted all of the parts listed in this group were factory installed on the following engines:
-97 (69425 to 72946, 80787 to 81084, 81105 to 81176, 81178, 81182, 81205, 81208, 81212, 81214, 81215, 81217 to 81225, 81227, 81229 to 81234, 81236 to 81239, 81241, 81243 to 81247, 81249 to 81252, 81254 to 81256, 81258 to 81261, 81263 to 81267, 81270 to 81275, 81277 to 81284, 81291, 81293, 81294, 81322 and 81327)

@ 410740 SHAFT ASSEMBLY—Gun synchronizer impulse generator drive..... - - - - - - - - - - 1

Factory installed on the following engines:
-97 (69425 to 70758 and 70865 to 71113)

410740 has an integral gear.

For replacement, make the following substitutions:

Use	Description	Remove	Quant
417439	*Shaft and Gear Assembly—Gun synchronizer impulse generator drive*	*410740*	*1*
417436	*Support Machining Assembly—Gun synchronizer impulse generator drive shaft*	*412523*	*1*
115482	*Washer—Gun synchronizer impulse generator drive shaft thrust*		

Fig. No.	Index Number	Part Number	Nomenclature 1 2 3 4 5 6 7	Units Per Assy—Model R1820 -40	-40B	-54	-60	-65	-71	-73	-87	-95	-97
57	5100	417439	SHAFT AND GEAR ASSEMBLY—Gun synchronizer impulse generator drive..	–	–	–	–	–	–	–	–	–	1
			Factory installed on the following engines: -97 (70759 to 70864, 71114 to 72946, 80787 to 81084, 81105 to 81176, 81178, 81180 to 81205, 81208 to 81210, 81212, 81214, 81215, 81217 to 81225, 81227, 81229 to 81234, 81236 to 81239, 81241, 81243 to 81247, 81249 to 81252, 81254 to 81256, 81258 to 81261, 81263 to 81267, 81270 to 81275, 81277 to 81284, 81291, 81293, 81294, 81322, and 81327)										
			417439 includes a spline fit bronze gear.										
		* 67837	SHAFT—Gun synchronizer impulse generator drive..... *Part of assembly 410740.*	–	–	–	–	–	–	–	–	–	1
		* 115487	SHAFT—Gun synchronizer impulse generator drive..... *Part of assembly 417439.*	–	–	–	–	–	–	–	–	–	1
		* 115484	GEAR—Gun synchronizer impulse generator drive shaft..... *Part of assembly 417439.*	–	–	–	–	–	–	–	–	–	1
57	5102	2034D11	PLUG—Gun synchronizer impulse generator drive shaft.....	–	–	–	–	–	–	–	–	–	1
57	5104	115482	WASHER—Gun synchronizer impulse generator drive shaft thrust.....	–	–	–	–	–	–	–	–	–	1
		412523	SUPPORT MACHINING ASSEMBLY—Gun synchronizer impulse generator drive shaft..... *Used with shaft 410740.*	–	–	–	–	–	–	–	–	–	1
			412523 is 3.816 in. long.										
57	5106	417436	SUPPORT MACHINING ASSEMBLY—Gun synchronizer impulse generator drive shaft..... *Used with shaft 417439.*	–	–	–	–	–	–	–	–	–	1
			417436 is 3.668 in. long.										
		* 68720	SUPPORT—Gun synchronizer impulse generator drive shaft..... *Part of assembly 412523.*	–	–	–	–	–	–	–	–	–	1
		* 115489	SUPPORT—Gun synchronizer impulse generator drive shaft..... *Part of assembly 417436.*	–	–	–	–	–	–	–	–	–	1
		68019	BUSHING—Gun synchronizer impulse generator drive shaft (1.125 in. long)..... *Part of assembly 412523.*	–	–	–	–	–	–	–	–	–	2
57	5108	115480	BUSHING—Gun synchronizer impulse generator drive shaft (.440 in. long)..... *Part of assembly 417436.*	–	–	–	–	–	–	–	–	–	2
		102D1	PLUG—Gun synchronizer impulse generator drive shaft support oil drain hole.....	–	–	–	–	–	–	–	–	–	3
57	5110	27471	GASKET—Gun synchronizer impulse generator drive shaft support.....	–	–	–	–	–	–	–	–	–	1
57	5112	69620	SLEEVE—Gun synchronizer impulse generator drive shaft.....	–	–	–	–	–	–	–	–	–	1
57	5114	2097D10	SPACER—Gun synchronizer impulse generator drive shaft.....	–	–	–	–	–	–	–	–	–	1
57	5116	27D125	WASHER—Gun synchronizer impulse generator drive shaft.....	–	–	–	–	–	–	–	–	–	1
57	5118	2101D5	NUT—Gun synchronizer impulse generator drive shaft retaining.....	–	–	–	–	–	–	–	–	–	1

AVIATIONS
WWW.AVIATIONS.COM

Fig. No.	Index Number	Part Number	Nomenclature 1 2 3 4 5 6 7	Units Per Assy—Model R1820 -40	-40B	-54	-60	-65	-71	-73	-87	-95	-97
57	5120	66131	COVER—Gun synchronizer impulse generator substituting	–	–	–	–	–	–	–	–	–	1
57	5122	27471	GASKET—Gun synchronizer impulse generator or substituting cover	–	–	–	–	–	–	–	–	–	1
57	5124	22D1	SCREW—Gun synchronizer impulse generator substituting cover to supercharger rear housing	–	–	–	–	–	–	–	–	–	4
57	5126	27D1	WASHER—Gun synchronizer impulse generator substituting cover to supercharger rear housing	–	–	–	–	–	–	–	–	–	4

MISCELLANEOUS

THERMOCOUPLE (SPARK PLUG)

		68326	THERMOCOUPLE—Spark plug, iron constantan *Includes clamp 61459, screw 123D4 and lockwasher 28D5.*	–	–	–	–	1	–	1	–	–	1
		@ 68328	THERMOCOUPLE—Spark plug, copper constantan *Includes clamp 61459, screw 123D4 and lockwasher 28D5.*	–	–	–	9	–	–	–	–	–	–

For replacement make the following substitutions:

Use	Description	Remove	Quant.
129906	*Thermocouple — Spark plug iron constantan*	*68328*	*1*
129442	*Bracket — Thermocouple*		*1*
AN520-10-8	*Screw — Thermocouple bracket*		*1*
28D5	*Lockwasher — Thermocouple bracket*		*1*

58	5150	129906	THERMOCOUPLE—Spark plug, iron constantan	–	–	–	9	–	–	–	–	–	–
58	5158	129442	BRACKET—Spark plug thermocouple	–	–	–	9	–	–	–	–	–	–
58	5160	AN520-10-8	SCREW—Spark plug thermocouple bracket (Wright Part No. 123D1)	–	–	–	9	–	–	–	–	–	–
58	5162	28D5	LOCKWASHER—Spark plug thermocouple bracket	–	–	–	9	–	–	–	–	–	–
		61459	CLAMP—Spark plug thermocouple	–	–	–	9	1	–	1	–	–	1
		123D4	SCREW—Spark plug thermocouple clamp	–	–	–	9	1	–	1	–	–	1
		28D5	LOCKWASHER—Spark plug thermocouple clamp	–	–	–	9	1	–	1	–	–	1

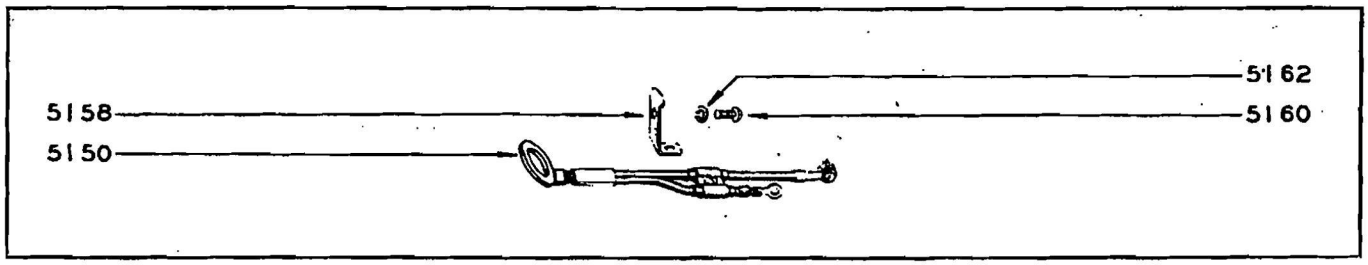

Numbers shown are index numbers and are numerically arranged in the Group Assembly Parts List

Figure 58—Spark Plug Thermocouple

Fig. No.	Index Number	Part Number	* 1 2 3 4	Nomenclature 3 6 7	Units Per Assy—Model R1820 -40 -40B -54 -60 -65 -71 -73 -87 -95 -97
				THERMOCOUPLE (CYLINDER BASE)	
		49256		THERMOCOUPLE ASSEMBLY—Cylinder base.....	9 - - 9 - - - - - -
				Factory installed on the following engines: -40 (45777 to 45876) -60 (73229)	
59	5175	49218		SUPPORT ASSEMBLY—Cylinder base thermocouple.....	1 - - 1 - - - - - -
		* 65703		SUPPORT—Cylinder base thermocouple.....	1 - - 1 - - - - - -
		* 3097D4		SPACER—Cylinder base thermocouple support.....	1 - - 1 - - - - - -
59	5177	65206		THERMOCOUPLE—Cylinder base....	1 - - 1 - - - - - -

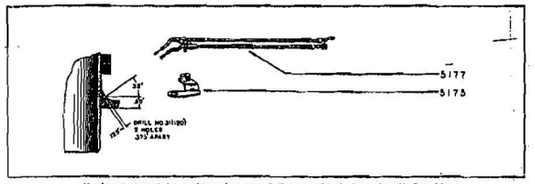

Numbers shown are index numbers and are numerically arranged in the Group Assembly Parts List

Figure 59—Cylinder Base Thermocouple

GOVERNMENT FURNISHED EQUIPMENT

FUEL PUMP

	H4E3	FUEL PUMP.....	- - - 1 - - - - - -
		This pump is suitable for installation on any -60 engines.	

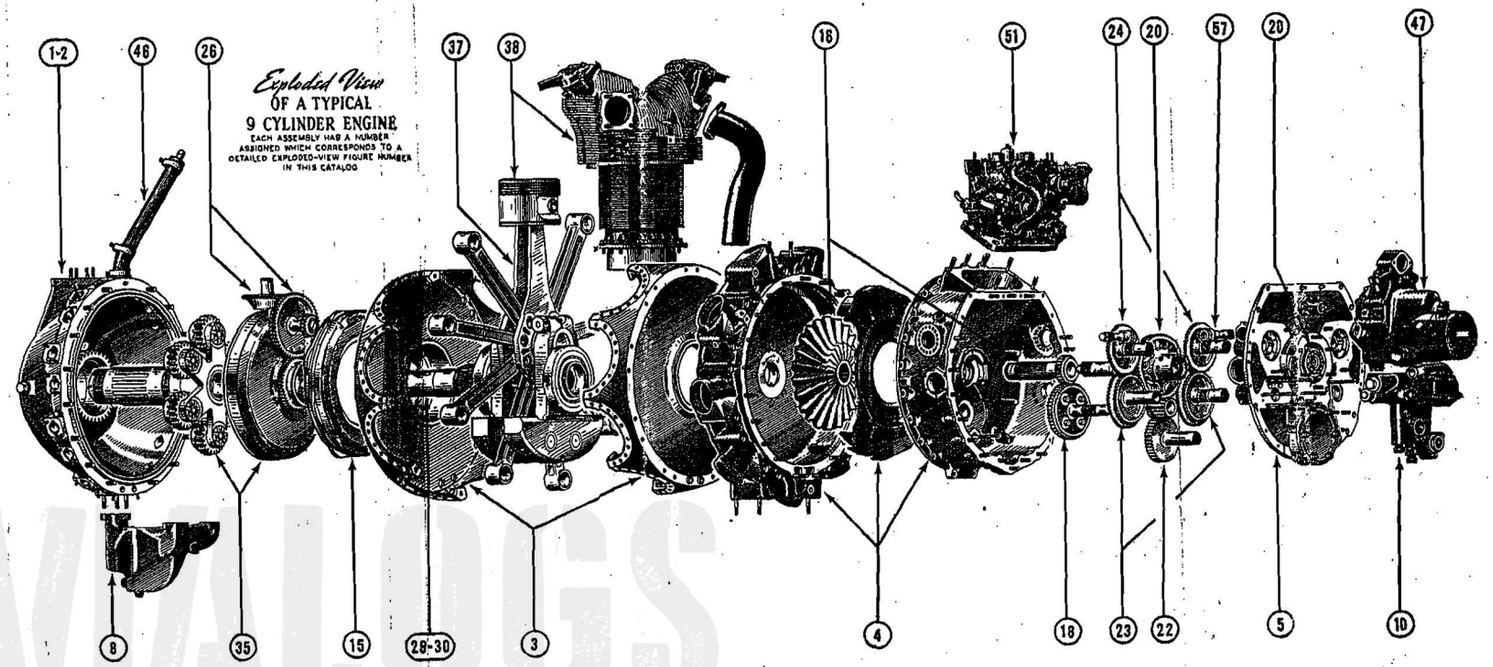

AVIALOGS
WWW.AVIALOGS.COM

SECTION III

NUMERICAL PARTS LIST

Part Number	Figure Number	Index Number	Page Number	Model R1820									
				-40	-40B	-54	-60	-65	-71	-73	-87	-95	-97
AJ5-35			165	–	2	2	2	–	–	–	–	–	–
AJ5-45			164	–	2	2	2	–	–	–	–	–	–
AN4023-1	52	4784	186	5	–	–	–	5	–	5	5	–	5
AN4027-1	49, 50	4546	181	18	18	18	18	18	18	18	18	18	18
AN425A4-7			86	1	–	1	1	1	–	1	–	–	1
AN430AD4-4			161, 162, 163, 164, 165, 167	63	159	119	119	63	63	63	63	56	63
AN430AD4-9			7	6	6	6	6	6	6	6	6	6	6
AN515-6-8			128, 135, 140, 143, 144, 149, 150, 154, 158, 160, 163	58	24	21	15	55	58	52	58	50	55
AN520-10-10	6	1489, 1495, 1503	29, 30, 178,185	29	17	18	18	30	18	30	30	15	34
	49, 50	4530											
	52	4772											
AN520-10-8	53	4839	134, 167, 187, 188, 198	2	2	3	20	2	2	2	2	2	2
	54	4884											
	58	5160											
AN780-2	52	4786	186	5	–	–	–	5	–	5	5	–	5
AN780-4			188	–	–	–	–	–	1	–	–	1	–
AN800-4			188	–	1	–	–	–	1	–	–	1	–
AN805-2	52	4762	185	10	–	–	–	10	–	10	10	–	10
AN805-4	53	4829	187,.188	–	1	4	4	–	1	–	–	1	–
	54	4876											
AN900-10	9, 10, 11	1819	7, 45, 97, 182, 192	6	4	4	5	6	4	4	4	6	6
	31	3372											
	55	4992											
AN900-14	5	1404	26	1	1	1	1	1	1	1	1	1	1
AN900-16	8	1612	34	1	1	1	1	1	1	1	1	1	1
AN900-18	1, 2	1063	8, 49, 192	5	3	3	3	3	3	1	3	3	3
	12	2208											
	55	4988											
AN900-20	4	1174	11	1	1	1	1	1	1	1	1	1	1
AN900-22	8	1608	34, 46	2	2	2	2	2	2	2	2	2	2
	9, 10, 11	1843											
AN900-5	1, 2	1023	7, 26	12	12	12	12	12	12	12	12	12	12
	5	1401											
AN900-8	1, 2	1033	7	2	2	2	2	2	2	2	2	2	2
AN912-10	9, 10, 11	1851	47	2	2	2	2	1	2	1	2	–	2
AN913-3	4	1292	17, 31	2	2	2	2	2	2	2	2	2	3
AN913-6	5	1444	28	1	1	1	1	1	1	1	1	1	1
AN913-6S			12	–	–	–	1	–	–	–	–	–	–
A5-30			165	–	2	2	2	–	–	–	–	–	–
B1001-1	48	4402	171	–	–	2	–	–	–	–	–	–	–
B1003-1			171	–	–	2	–	–	–	–	–	–	–
C34S			181	–	–	18	–	18	–	–	18	–	18
C35S	50	4544	181	–	–	–	18	–	–	–	18	–	18
D31040	50	4502	176	–	–	–	1	1	1	–	1	–	1
D31043			176	–	–	–	1	1	1	–	1	–	1
E605-4P-AN			173	–	–	–	–	–	–	–	@	@	–
E611-4P-AN			173	–	–	–	–	@	–	@	@	–	–
E615-4P-AN			173	@	–	–	–	@	–	–	–	–	–
E667-4P-AN			174	–	@	@	@	@	@	–	@	@	–
E668-4P-AN			174	@	@	–	@	–	–	–	–	–	–
E757-4P-AN	49	4500	175	1	1	1	1	1	1	1	1	1	–
E757-4P4R			176	–	–	–	1	1	1	1	1	1	–
FB14	12	2214	49, 168	6	6	6	6	6	6	–	6	–	6
H4E3			199	–	–	–	1	–	–	–	–	–	–
LS298			180	–	–	–	–	–	18	–	–	–	–
LS38C			180	–	–	–	–	@	–	–	–	–	–
LS38C-E111			181	–	–	–	18	18	18	–	–	–	–
LS465	49	4532	180	18	18	–	18	18	18	18	18	–	–
LS465A			180	–	–	18	18	–	–	–	18	–	–

AVIAL.OGS
WWW.AVIAL.OGS.COM

Part Number	Figure Number	Index Number	Page Number	Model R1820 -40	-40B	-54	-60	-65	-71	-73	-87	-95	-97
LS85			180	–	–	–	–	–	@	–	@	@	@
LS87			180	–	–	–	–	–	18	–	18	18	18
MJR9A307			171	–	–	–	1	1	–	–	–	–	1
MJR9A309			171	–	–	–	1	1	–	–	–	–	1
M16	46	4308	108	–	–	–	54	54	54	54	54	54	54
SD601	21, 22	2870	73, 77, 78	18	18	18	18	18	18	18	18	18	18
	24	3010											
	25	3037											
SD602	20	2832	71	12	12	12	12	12	12	12	12	12	12
S5-200			161, 162, 163	–	10	8	8	–	–	–	–	–	–
1D1	18	2544	61, 65, 165, 192	12	8	6	6	–	–	–	6	12	–
	19	2656											
	55	4978											
1D4	9, 10, 11	1857	27, 47, 75, 87, 173, 178	25	25	21	25	25	21	21	25	21	21
	23	2972											
	27, 28	3204											
	47, 48	4428											
1D5	5	1420	27	3	3	3	3	3	3	3	3	3	3
1D7			93	2	–	–	–	2	2	2	–	2	2
1D91	2	1051	8	10	10	–	10	–	10	10	10	10	–
1D95	11	1779	45	4	–	–	–	4	4	–	–	–	4
10-14477	47	4424	172	#	2	–	–	2	2	2	2	2	2
10-16525-4			170	@	–	–	–	–	–	–	–	–	–
10-20700-1	47	4400	170	2	2	–	–	2	2	2	2	2	–
10-21225-1			170	2	–	–	–	–	–	–	–	–	–
102D1			194, 197	6	–	–	6	6	–	6	–	–	3
102D12			101, 102, 105	2	2	1	2	1	2	2	2	2	1
102D13			101, 105	–	–	1	–	1	–	–	–	–	1
102D33	5	1406	26, 55, 84, 85	#	#	#	#	#	#	#	#	#	#
	15	2306											
	27, 28	3120											
		3140											
10658			51	@	–	–	–	–	–	–	–	–	–
10779			51	–	–	–	–	@	–	–	–	–	@
¢ 110046			115	9	9	9	9	9	9	9	9	9	9
110046Y2			115	AR	AR	AR	AR	AR	AR	AR	AR	AR	AR
110046Y3			115	AR	AR	AR	AR	AR	AR	AR	AR	AR	AR
110046Y4			115	AR	AR	AR	AR	AR	AR	AR	AR	AR	AR
110046Y5			115	AR	AR	AR	AR	AR	AR	AR	AR	AR	AR
110048N2			85	1	–	1	1	1	–	1	–	–	1
110069			169	@	@	–	@	@	@	@	@	–	@
¢ 110080			115	9	9	9	9	9	9	9	9	9	9
110080Y2			115	AR	AR	AR	AR	AR	AR	AR	AR	AR	AR
110080Y3			115	AR	AR	AR	AR	AR	AR	AR	AR	AR	AR
110080Y4			115	AR	AR	AR	AR	AR	AR	AR	AR	AR	AR
110080Y5			115	AR	AR	AR	AR	AR	AR	AR	AR	AR	AR
110117	36	3632	105	–	–	–	–	20	–	–	–	–	20
110169	27, 28	3144	85	2	2	2	2	2	2	2	2	2	2
110219	38	3958	124	18	18	18	18	18	18	18	18	18	18
110264			96	1	–	–	–	–	–	–	–	–	–
110265			101, 103	–	–	1	–	1	–	–	–	–	1
110276	33	3408	99	–	–	–	–	1	–	–	–	–	1
110282			169	@	–	–	–	@	–	–	–	@	@
110298	31, 32	3362	97	6	6	–	6	–	6	6	6	6	–
110423	9, 10, 11	1797	45	1	1	1	1	1	1	1	1	1	1
110424	23	2904	73	1	1	1	1	1	1	1	1	1	1
110426	9, 10, 11	1795	45	1	1	1	1	1	1	1	1	1	1
110427	9, 10, 11	1807	45	1	1	1	1	1	1	1	1	1	1
110428			41	1	1	1	1	1	1	1	1	1	1
110429	9, 10, 11	1711	41	1	1	1	1	1	1	1	1	1	1
110432	9, 10, 11	1689	41	1	1	1	1	1	1	1	1	1	1
110433	9, 10, 11	1715	41	1	1	1	1	1	1	1	1	1	1
110434			41	1	–	–	–	1	1	1	1	1	1
110487			65	1	–	–	–	–	–	–	–	1	–
110488			65	1	–	–	–	–	–	–	–	1	–
110489	18	2677	65	1	–	–	–	–	–	–	–	1	–
110490			65	1	–	–	–	–	–	–	–	1	–
110491			65	1	–	–	–	–	–	–	–	1	–

 # Quantity varies. Refer to indicated page(s) for explanation.

AVIALOGS
WWW.AVIALOGS.COM

Part Number	Figure Number	Index Number	Page Number	Model R1820 -40	-40B	-54	-60	-65	-71	-73	-87	-95	-97
110516			112	@	–	–	–	@	–	–	–	@	–
110526			164	–	2	2	2	–	–	–	–	–	–
110562	9, 10, 11	1805	45	1	1	1	1	1	1	1	1	1	1
110563	9, 10, 11	1809	45	1	1	1	1	1	1	1	1	1	1
110567	9, 10, 11	1825	46	1	1	1	1	1	1	1	1	1	1
110568			45	@	@	@	@	@	@	@	@	@	@
110633			121	@	–	–	–	–	–	–	–	@	–
110655			121	@	–	–	–	–	–	–	–	@	–
110680			15	–	–	–	–	1	–	1	–	–	1
110882	55	4994	192	2	–	–	–	–	–	–	–	–	–
110883			191	@	–	–	–	–	–	–	–	–	–
110883N1			191	1	–	–	–	–	–	–	–	–	–
110884			191	@	–	–	–	–	–	–	–	–	–
110884N1	55	4974	191	1	–	–	–	–	–	–	–	–	–
110901			183	–	–	–	–	1	–	–	–	–	1
111033			73, 77	@	–	–	–	–	–	–	–	@	–
111107			183	1	1	1	1	–	1	1	1	1	–
≠ 111149	18	2504	60	1	–	–	–	–	–	–	–	1	–
111149Y1			60	AR	–	–	–	–	–	–	–	AR	–
111149Y10			60	AR	–	–	–	–	–	–	–	AR	–
111149Y11			60	AR	–	–	–	–	–	–	–	AR	–
111149Y20			60	AR	–	–	–	–	–	–	–	AR	–
111149Y21			60	AR	–	–	–	–	–	–	–	AR	–
111149Y30			60	AR	–	–	–	–	–	–	–	AR	–
111149Y31			60	AR	–	–	–	–	–	–	–	AR	–
111203	29, 30	3256	92	4	4	4	4	4	4	4	4	4	4
111204	29, 30	3266	92	2	2	2	2	2	2	2	2	2	2
111205	29, 30	3254	91	4	4	4	4	4	4	4	4	4	4
111206	29, 30	3270	92	2	2	2	2	2	2	2	2	2	2
111254	19	2654	65	1	1	1	1	–	–	–	1	–	–
111345			92	1	–	–	–	1	–	–	–	1	–
111353			39	1	–	–	–	1	1	1	1	1	1
111354			41	1	–	–	–	1	1	1	1	1	1
111355			39	1	–	–	–	1	1	1	1	1	1
111356	9	1755	44	1	–	–	–	1	1	1	1	1	1
111357	9	1759	44	1	–	–	–	1	1	1	1	1	1
111370	1, 2	1041	7	1	1	1	1	1	1	1	1	1	1
111375			41	–	–	–	–	–	–	–	–	1	–
111540			172	@	@	@	@	@	@	@	@	@	@
111540N2	47, 48	4408	172	1	1	1	1	1	1	1	1	1	1
111541	49, 50	4524	178	1	1	2	2	2	2	2	2	1	2
111542	49, 50	4526	178	1	1	2	2	2	2	2	2	1	2
111543	49, 50	4528	178	1	1	2	2	2	2	2	2	1	2
111667			18	–	–	–	–	2	–	2	–	–	2
111708	31, 32	3358	97	1	1	–	1	–	1	1	1	1	–
111787			172	–	–	–	–	–	@	–	@	–	–
111850			72	1	1	1	1	1	1	1	1	1	1
111862			85	1	–	–	1	1	–	1	–	–	1
111874			171	@	@	–	@	@	@	@	@	@	@
111874N1	47	4404	171	1	1	–	1	1	1	1	1	1	1
111880			85	1	–	–	1	1	–	1	–	–	1
111885			166	9	9	9	9	9	9	9	9	8	9
111886			166	9	9	9	9	9	9	9	9	8	9
111887			166	9	9	9	9	9	9	9	9	8	9
111890			143, 148	–	–	–	–	1	1	1	–	–	1
111891			143, 148	–	–	–	–	1	1	1	–	–	1
111892			143, 148	–	–	–	–	1	1	1	–	–	1
111893			143, 148	–	–	–	–	1	1	1	–	–	1
111904			96	–	–	–	–	–	–	–	–	1	–
111977			168	@	–	–	–	–	–	@	–	@	–
111978			167	1	–	–	–	–	–	–	–	1	–
111979			167	1	–	–	–	–	–	–	–	1	–
111980			167	1	–	–	–	–	–	–	–	1	–
111981			166	1	–	–	–	–	–	–	–	1	–
111982			166	1	–	–	–	–	–	–	–	1	–
112007			158	–	–	–	–	–	–	–	–	1	–
112009			158	–	–	–	–	–	–	–	–	1	–
112010			158	–	–	–	–	–	–	–	–	1	–
112011			119	≠	1	–	2	–	–	–	–	–	–

≠ *Quantity varies. Refer to indicated page(s) for explanation.*

Part Number	Figure Number	Index Number	Page Number	Model R1820 -40	-40B	-54	-60	-65	-71	-73	-87	-95	-97
112012			119	#	1	–	2	–	–	–	–	–	–
112043	20	2806	67	5	5	5	5	5	5	5	5	5	5
112094			115	9	9	9	9	9	9	9	9	9	9
112096			115	9	9	9	9	9	9	9	9	9	9
11210	13	2250	52	1	1	–	1	1	1	1	1	1	1
112313	15	2322	56	1	1	1	1	1	1	1	1	1	1
112315	15	2316	55	1	1	1	1	1	1	1	1	1	1
112316	15	2318	55	1	1	1	1	1	1	1	1	1	1
112318			172	@	@	@	@	@	@	@	@	@	@
112318N2			172	1	1	1	1	1	1	1	1	1	1
112346	36	3634	106	–	–	–	–	20	–	–	–	–	20
112354			9	@	–	–	–	–	@	–	–	@	–
112381			118	@	@	@	@	@	@	@	@	@	@
112381N1	46	3860	118	18	18	18	18	18	18	18	18	18	18
112382			118	@	@	@	@	@	@	@	@	@	@
112382N1	46	3862	118	18	18	18	18	18	18	18	18	18	18
112391			158	–	–	–	–	–	–	–	–	1	–
112403	4	1229	12	#	#	#	#	#	#	#	#	#	#
112505			62	1	1	1	1	–	–	–	1	–	–
112515			54	1	1	1	1	1	1	1	1	1	1
112517			62	1	1	1	1	–	–	–	1	–	–
112518	19	2610	62	4	4	4	4	–	–	–	4	–	–
112520	19	2626	62	1	1	1	1	–	–	–	1	–	–
112521	19	2648	64	1	1	1	1	–	–	–	1	–	–
112522	19	2620	62	1	1	1	1	–	–	–	1	–	–
112528			57	1	1	1	1	–	–	–	1	–	–
112534	19	2624	62	1	1	1	1	–	–	–	1	–	–
112535	19	2602	62	1	1	1	1	–	–	–	1	–	–
112536			64	@	@	@	@	–	–	–	@	–	–
112536N1	19	2646	64	1	1	1	1	–	–	–	1	–	–
112537	19	2604	62	1	1	1	1	–	–	–	1	–	–
112543	19	2628	62	1	1	1	1	–	–	–	1	–	–
112561			62	1	1	1	1	–	–	–	1	–	–
112562	19	2614	62	1	1	1	1	–	–	–	1	–	–
112566	19	2612	62	8	8	8	8	–	–	–	8	–	–
112620			66	1	1	1	1	–	–	–	1	–	–
112701			44	2	–	–	–	2	2	–	–	–	2
112702	11	1765	44	1	–	–	–	1	1	–	–	–	1
112703	11	1739, 1749	44	2	–	–	–	2	2	–	–	–	2
112814			127, 133, 139, 142, 147, 152, 157, 160, 163	9	8	11	7	9	9	9	9	6	9
112828			163	–	2	2	2	–	–	–	–	–	–
112883			128, 135, 139, 144, 149, 154, 158, 161, 163	52	48	52	48	52	52	52	52	52	52
112886			97	–	1	–	–	–	1	–	1	1	–
112887			97	1	–	–	1	–	–	1	–	–	–
± 112890	38	3950	121	9	9	9	9	9	9	9	9	9	9
112890Y1			121	AR	AR	AR	AR	AR	AR	AR	AR	AR	AR
112898			64	1	1	1	1	–	–	–	1	–	–
112984			9	@	@	@	@	@	@	@	@	@	@
112989			41, 43	3	2	2	2	3	3	3	3	3	3
113077	18	2548	61	3	–	–	–	–	–	–	–	3	–
113102N1			178	#	–	–	–	–	–	–	–	–	–
113102N10			179	9	–	–	–	–	–	–	–	–	–
113102N11	49	4536	179	9	–	9	9	9	9	9	9	9	9
113102N2	49	4534	179	9	18	9	9	#	9	9	9	9	9
113103N11			178	–	–	–	–	–	–	–	@	–	–
113103N2			178	–	@	–	–	–	–	–	@	–	–
113148	16	2426	58	1	1	1	1	1	1	1	1	1	1
± 113154	37	3722	113	1	1	1	1	1	1	1	1	1	1
113154Y1			113	AR	AR	AR	AR	AR	AR	AR	AR	AR	AR
113154Y10			113	AR	AR	AR	AR	AR	AR	AR	AR	AR	AR
113154Y11			113	AR	AR	AR	AR	AR	AR	AR	AR	AR	AR
113154Y12			113	AR	AR	AR	AR	AR	AR	AR	AR	AR	AR
113154Y2			113	AR	AR	AR	AR	AR	AR	AR	AR	AR	AR
113154Y5			113	AR	AR	AR	AR	AR	AR	AR	AR	AR	AR
113154Y6			113	AR	AR	AR	AR	AR	AR	AR	AR	AR	AR
113154Y7			113	AR	AR	AR	AR	AR	AR	AR	AR	AR	AR
± 113170	38	3802	115	9	9	9	9	9	9	9	9	9	9

 # Quantity varies. Refer to indicated page(s) for explanation.

AVIATORS
WWW.AVIATORS.COM

Part Number	Figure Number	Index Number	Page Number	Model R1820 -40	-40B	-54	-60	-65	-71	-73	-87	-95	-97
113170Y2			115	AR	AR	AR	AR	AR	AR	AR	AR	AR	AR
113170Y3			115	AR	AR	AR	AR	AR	AR	AR	AR	AR	AR
113170Y4			115	AR	AR	AR	AR	AR	AR	AR	AR	AR	AR
113170Y5			115	AR	AR	AR	AR	AR	AR	AR	AR	AR	AR
± 113171			118	18	18	18	18	18	18	18	18	18	18
113171Y1			118	AR	AR	AR	AR	AR	AR	AR	AR	AR	AR
113173			110	@	@	@	@	@	@	–	@	–	–
113190	46	4336	168	18	18	18	18	18	18	18	18	18	18
113204			4	1	1	–	1	1	1	–	1	1	1
113226			109	@	–	–	–	@	@	@	@	@	–
± 113255	34	3521	101, 102, 105	2	2	2	2	2	2	2	2	2	2
	36	3616											
113255Y1			101, 102, 105	AR	AR	AR	AR	AR	AR	AR	AR	AR	AR
113255Y2			101, 102, 105	AR	AR	AR	AR	AR	AR	AR	AR	AR	AR
113259			111	–	–	8	8	–	8	–	–	–	8
113326			24	1	–	–	–	1	–	1	1	1	1
113394			128, 135, 139, 149, 154	9	–	6	6	–	8	–	9	–	–
113435			64	1	1	1	1	–	–	–	1	–	–
113501	19	2729	66	1	1	1	1	–	–	–	1	–	–
113503	19	2725	65	1	1	1	1	–	–	–	1	–	–
113505			93	#	#	#	#	#	#	#	#	#	#
113506			66	@	–	–	–	–	–	–	–	@	@
113507			92	1	1	1	1	1	1	–	1	1	1
113509	39	3970	129, 136, 140, 144, 150, 155, 159	9	9	9	9	9	9	9	9	9	9
	40	4024											
	41	4074											
	42	4124											
	43	4174											
	44	4206											
	45	4245											
113511			67	1	1	–	1	1	1	1	1	1	1
113512			68	–	–	–	–	@	@	@	@	@	@
113513			24	1	–	–	–	1	–	1	1	1	1
113526	19	2652	64	3	3	3	3	–	–	–	3	–	–
113571	29, 30	3276	93	1	1	1	1	1	1	1	1	1	1
113573	29, 30	3262	92	1	1	1	1	1	1	1	1	1	1
113579			92	1	–	–	–	1	1	1	–	1	1
113581	20	2800	66	1	1	1	1	1	1	1	1	1	1
113587			92	1	–	–	–	1	1	1	–	1	1
113596			64	1	1	1	1	–	–	–	1	–	–
113606			61	@	–	–	–	–	–	–	–	@	–
113621			127, 134, 139, 148, 153, 157	1	–	1	1	–	1	–	1	1	–
113622			127, 134, 139, 143, 148, 153, 157	8	6	6	6	5	8	5	8	6	5
113665			24	1	1	–	1	1	1	–	1	–	1
113689	18	2542	61	1	–	–	–	–	–	–	–	1	–
113690	18	2562	61, 64	1	1	1	1	–	–	–	1	1	–
	19	2636											
113692	29, 30	3268	92	2	2	2	2	2	2	2	2	2	2
113701N1			12	1	1	1	1	–	1	–	1	1	–
113742			72, 76, 78	@	@	–	@	@	@	@	@	@	@
113752			70	@	–	–	–	@	@	@	@	@	@
113846			69	@	@	–	@	–	–	–	@	–	–
113861	46	3838	117	18	18	18	18	18	18	18	18	18	18
113862			117	9	9	9	9	9	9	9	9	9	9
113863			117	9	9	9	9	9	9	9	9	9	9
113957			92	1	1	1	1	1	1	–	1	1	1
113960	23	2902	73	1	1	1	1	1	1	1	1	1	1
113961			34	1	1	1	1	1	1	1	1	1	1
113989			160	–	2	–	–	–	–	–	–	–	–
113989N1			163	–	2	2	2	–	–	–	–	–	–
113990			160, 163	–	2	2	2	–	–	–	–	–	–
113991			160, 163	–	2	2	2	–	–	–	–	–	–
113992			161, 162	–	2	2	2	–	–	–	–	–	–
113993			165	–	2	2	2	–	–	–	–	–	–
113994			161, 162	–	4	4	4	–	–	–	–	–	–

 # Quantity varies. Refer to indicated page(s) for explanation.

AVIALOGS
WWW.AVIALOGS.COM

Part Number	Figure Number	Index Number	Page Number	Model R1820									
				-40	-40B	-54	-60	-65	-71	-73	-87	-95	-97
113996			162, 164	–	2	2	2	–	–	–	–	–	–
113997			162, 164	–	2	2	2	–	–	–	–	–	–
113998			165	–	2	2	2	–	–	–	–	–	–
113999			165	–	2	2	2	–	–	–	–	–	–
114000			161	–	2	–	–	–	–	–	–	–	–
114001			161	–	2	–	–	–	–	–	–	–	–
114002			161	–	2	–	–	–	–	–	–	–	–
114003			161	–	2	–	–	–	–	–	–	–	–
114004			162	–	2	–	–	–	–	–	–	–	–
114005			162	–	2	–	–	–	–	–	–	–	–
114006			164	–	2	–	–	–	–	–	–	–	–
114007			164	–	2	–	–	–	–	–	–	–	–
114008			164	–	2	–	–	–	–	–	–	–	–
114009			164	–	2	–	–	–	–	–	–	–	–
114010			164	–	2	–	–	–	–	–	–	–	–
114011			164	–	2	–	–	–	–	–	–	–	–
114012			165	–	2	–	–	–	–	–	–	–	–
114013			120	–	2	2	2	–	–	–	–	–	–
114014			120	–	2	2	2	–	–	–	–	–	–
114024			164	–	4	–	–	–	–	–	–	–	–
✱ 114041	38	3953	122	18	18	18	18	18	18	18	18	18	18
114041Y1			122	AR	AR	AR	AR	AR	AR	AR	AR	AR	AR
114041Y15			122	AR	AR	AR	AR	AR	AR	AR	AR	AR	AR
114041Y16			122	AR	AR	AR	AR	AR	AR	AR	AR	AR	AR
114041Y17			122	AR	AR	AR	AR	AR	AR	AR	AR	AR	AR
114041Y18			123	AR	AR	AR	AR	AR	AR	AR	AR	AR	AR
114041Y19			123	AR	AR	AR	AR	AR	AR	AR	AR	AR	AR
114041Y2			122	AR	AR	AR	AR	AR	AR	AR	AR	AR	AR
114041Y20			123	AR	AR	AR	AR	AR	AR	AR	AR	AR	AR
114041Y3			122	AR	AR	AR	AR	AR	AR	AR	AR	AR	AR
114041Y4			122	AR	AR	AR	AR	AR	AR	AR	AR	AR	AR
114041Y5			122	AR	AR	AR	AR	AR	AR	AR	AR	AR	AR
114081N1	56	5070	195	2	–	–	–	–	–	–	–	–	–
114086			122	@	–	–	–	–	–	–	–	@	–
114113	15	2300	54	1	1	1	1	1	1	1	1	1	1
114141	46	3842	118	9	9	9	9	9	9	9	9	9	9
114337			64	@	@	@	@	–	–	–	@	–	–
114359			168	18	18	18	18	18	18	18	18	18	18
114431	46	4338	168	18	18	18	18	18	18	18	18	18	18
114520	11	1763	44	1	–	–	–	1	1	–	–	–	1
114521	11	1773	44	1	–	–	–	1	1	–	–	–	1
114522			41	1	1	1	1	1	1	–	1	–	1
114523			34	1	–	–	–	–	–	–	–	–	–
114524	10, 11	1761	44	1	1	1	1	1	1	–	1	–	1
114525			39	1	–	–	–	–	–	–	–	–	–
114526	10, 11	1757	44	1	1	1	1	1	1	–	1	–	1
114527	10, 11	1813	45	1	1	1	1	1	1	–	1	–	1
114528			44	1	–	–	–	1	1	–	–	–	1
114529			44	1	–	–	–	1	1	–	–	–	1
114530			41	1	–	–	–	–	–	–	–	–	–
114531			39	1	1	1	1	1	1	–	1	–	1
114532			48	1	–	–	–	–	–	–	–	–	–
114574	9, 11	1781	45	1	–	–	–	1	1	1	1	1	1
114587	19	2632	64	1	1	1	1	–	–	–	1	–	–
114588			64	1	1	1	1	–	–	–	1	–	–
114644			46	1	1	1	1	–	–	–	1	–	–
114674	46	3858	118	9	9	9	9	9	9	9	9	9	9
114782			11	9	9	9	9	9	9	9	9	9	9
114984			73, 77, 78	@	@	–	@	@	@	@	@	@	@
115029			48	1	–	–	–	–	–	–	–	–	–
115031			48	1	–	–	–	–	–	–	–	–	–
115171	29, 30	3316	95	1	1	1	1	1	1	1	1	1	1
115280	53	4833	187	–	–	2	–	–	–	–	–	–	–
115300			127, 134, 158	1	1	–	–	–	–	–	–	1	–
115301			139, 143, 148	–	–	1	–	1	1	1	–	–	1
115302			157	–	–	–	–	–	–	–	–	2	–
115303			143, 148	–	–	–	–	1	1	1	–	–	1
115304			119	–	–	–	–	–	–	–	–	@	–
115305			143, 148	–	–	–	–	1	1	1	–	–	1
115307			127	2	–	–	–	–	–	–	–	–	–

AVIALOGS
WWW.AVIALOGS.COM

Part Number	Figure Number	Index Number	Page Number	Model R1820									
				-40	-40B	-54	-60	-65	-71	-73	-87	-95	-97
115308			143, 148	–	–	–	–	1	1	1	–	–	1
115390	19	2727	65	1	1	1	1	–	–	–	1	–	–
115458	20	2818	67	1	1	1	1	1	1	1	1	1	1
115459	20	2820	67	1	1	1	1	1	1	1	1	1	1
115460			67	@	@	@	@	@	@	@	@	@	@
115461			69	–	–	–	–	1	1	1	1	1	1
115480	55	4952	190, 194, 197	#	–	–	4	4	–	4	–	#	2
	56	5058											
	57	5108											
115482	55	4956	190, 194, 197	2	–	–	2	2	–	2	–	2	1
	56	5054											
	57	5104											
115483			190, 194	2	–	–	2	–	–	2	–	2	–
115484			194, 197	–	–	–	–	2	–	–	–	–	1
115486			190	2	–	–	–	–	–	–	–	2	–
115487			194, 197	2	–	–	2	2	–	2	–	–	1
115488			190	2	–	–	–	–	–	–	–	2	–
115489			194, 197	2	–	–	2	2	–	2	–	–	1
115513	18	2536	61	5	–	–	–	–	–	–	–	5	–
115528			15	1	1	1	1	–	1	–	1	1	–
115530			15	–	–	–	–	1	–	1	–	–	1
115613			61, 64	@	@	@	@	–	–	–	@	@	–
115748	12	2206	49	1	1	1	1	1	1	–	1	–	1
115749			34	1	1	1	1	1	1	–	1	–	1
115750	12	2204	49	1	1	1	1	1	1	–	1	–	1
115751	20	2822	69	1	1	1	1	–	–	–	1	–	–
115754			39	1	1	1	1	1	1	–	1	–	1
115755			41	1	1	1	1	1	1	–	1	–	1
115788			112	@	@	@	@	–	@	–	@	–	@
115882	12	2200	49	1	1	1	1	1	1	–	1	–	1
115883			49	@	@	@	@	@	@	–	@	–	@
115884			43	1	–	–	–	1	1	1	1	1	1
115896	9, 10, 11	1707	41, 43	3	2	2	2	3	3	3	3	3	3
115897			43	2	1	1	1	2	2	2	2	2	2
115946	9	1681, 1691	39, 41	2	1	1	1	2	2	2	2	2	2
	10	1681											
115960			43	2	1	1	1	2	2	1	1	1	2
115961N2	47	4420	172	1	1	–	1	1	1	1	1	1	1
116105	15	2302	54	1	1	1	1	1	1	1	1	1	1
116116	12	2226	50	1	1	1	1	1	1	–	1	–	1
116119			60	1	–	–	–	–	–	–	–	1	–
116132			92	1	1	1	1	1	1	1	1	1	1
116147			91	1	1	1	1	1	1	1	1	1	1
116172	20	2828	70	1	1	1	1	1	1	1	1	1	1
116429			9	1	1	1	1	1	1	1	1	1	1
116430			9	1	1	1	1	1	1	1	1	1	1
116442	46	4344	169	18	18	18	18	18	18	18	18	18	18
116472			127, 135, 139, 143, 148, 153, 158, 161, 163	18	18	18	18	18	18	18	18	18	18
116539N1			176	–	–	–	18	18	18	18	18	18	18
116560			45	–	–	–	–	–	–	–	1	–	1
116743N1			127, 148, 153	3	–	–	–	–	3	–	6	–	–
116743N11			139	–	–	1	–	–	–	–	–	–	–
116743N14			134	–	–	–	1	–	–	–	–	–	–
116743N15			134	–	–	–	2	–	–	–	–	–	–
116743N16			134, 139	–	–	1	1	–	–	–	–	–	–
116743N17			139	–	–	1	–	–	–	–	–	–	–
116743N18			139	–	–	1	–	–	–	–	–	–	–
116743N2			127, 134, 139, 148, 153	3	–	1	1	–	3	–	6	–	–
116743N3			127, 134, 139, 148, 153	2	–	3	1	–	2	–	2	–	–
116756N1			127, 134, 153	1	–	–	1	–	–	–	1	–	–
116854			43	–	–	–	–	–	–	–	–	1	–
116856			43	–	–	–	–	–	–	–	–	1	–
116869	3	1118	9	9	9	9	9	9	9	9	9	9	9
116964	13	2252	52, 54	1	1	1	1	1	1	1	1	1	1
	14	2295											
117037			112	@	@	–	–	@	@	–	@	@	@
117100			92	–	–	–	1	–	1	–	1	–	1
117195			45	–	–	–	–	–	–	–	1	–	1

 # Quantity varies. Refer to indicated page(s) for explanation.

AVIALOGS
WWW.AVIALOGS.COM

Part Number	Figure Number	Index Number	Page Number	Model R1820 -40	-40B	-54	-60	-65	-71	-73	-87	-95	-97
117196			45	–	–	–	–	–	–	–	1	–	1
117234N3	38	3874	118	#	8	9	7	9	9	9	9	9	9
117235N3	38	3876	119	#	8	9	7	9	9	9	9	9	9
117236	38	3878	119	18	18	18	18	18	18	18	18	18	18
117438			53	1	1	1	1	–	–	–	1	–	–
117439			53	1	1	1	1	–	–	–	1	–	–
117444			34	1	1	1	1	1	1	1	1	1	1
117450	19	2650	64	4	4	4	4	–	–	–	4	–	–
117463			53	1	1	1	1	–	–	–	1	–	–
117464			53	1	1	1	1	–	–	–	1	–	–
117467			54	1	1	1	1	–	–	–	1	–	–
± 117547	37	3706	110	1	1	1	1	1	1	1	1	1	1
117547Y1			110	AR	AR	AR	AR	AR	AR	AR	AR	AR	AR
117547Y10			110	AR	AR	AR	AR	AR	AR	AR	AR	AR	AR
117547Y12			110	AR	AR	AR	AR	AR	AR	AR	AR	AR	AR
117547Y14			110	AR	AR	AR	AR	AR	AR	AR	AR	AR	AR
117547Y2			110	AR	AR	AR	AR	AR	AR	AR	AR	AR	AR
117547Y20			110	AR	AR	AR	AR	AR	AR	AR	AR	AR	AR
117547Y22			110	AR	AR	AR	AR	AR	AR	AR	AR	AR	AR
117547Y24			111	AR	AR	AR	AR	AR	AR	AR	AR	AR	AR
117547Y3			110	AR	AR	AR	AR	AR	AR	AR	AR	AR	AR
117547Y30			111	AR	AR	AR	AR	AR	AR	AR	AR	AR	AR
117547Y32			111	AR	AR	AR	AR	AR	AR	AR	AR	AR	AR
117547Y34			111	AR	AR	AR	AR	AR	AR	AR	AR	AR	AR
117547Y4			110	AR	AR	AR	AR	AR	AR	AR	AR	AR	AR
117547Y40			111	AR	AR	AR	AR	AR	AR	AR	AR	AR	AR
117547Y42			111	AR	AR	AR	AR	AR	AR	AR	AR	AR	AR
117547Y44			111	AR	AR	AR	AR	AR	AR	AR	AR	AR	AR
117547Y5			110	AR	AR	AR	AR	AR	AR	AR	AR	AR	AR
117547Y6			110	AR	AR	AR	AR	AR	AR	AR	AR	AR	AR
117812	14	2293	54	1	1	1	1	–	–	–	1	–	–
117960	54	4880	188	–	–	–	1	–	–	–	–	–	–
117961	54	4882	188	–	–	–	2	–	–	–	–	–	–
117962			188	–	–	–	1	–	–	–	–	–	–
117963			188	–	–	–	1	–	–	–	–	–	–
± 117971	37	3704	109	1	1	1	1	1	1	1	1	1	1
117971Y1			109	AR	AR	AR	AR	AR	AR	AR	AR	AR	AR
117971Y10			109	AR	AR	AR	AR	AR	AR	AR	AR	AR	AR
117971Y11			109	AR	AR	AR	AR	AR	AR	AR	AR	AR	AR
117971Y12			109	AR	AR	AR	AR	AR	AR	AR	AR	AR	AR
117971Y13			109	AR	AR	AR	AR	AR	AR	AR	AR	AR	AR
117971Y14			109	AR	AR	AR	AR	AR	AR	AR	AR	AR	AR
117971Y15			109	AR	AR	AR	AR	AR	AR	AR	AR	AR	AR
117971Y2			109	AR	AR	AR	AR	AR	AR	AR	AR	AR	AR
117971Y20			109	AR	AR	AR	AR	AR	AR	AR	AR	AR	AR
117971Y21			109	AR	AR	AR	AR	AR	AR	AR	AR	AR	AR
117971Y22			109	AR	AR	AR	AR	AR	AR	AR	AR	AR	AR
117971Y23			109	AR	AR	AR	AR	AR	AR	AR	AR	AR	AR
117971Y24			109	AR	AR	AR	AR	AR	AR	AR	AR	AR	AR
117971Y25			109	AR	AR	AR	AR	AR	AR	AR	AR	AR	AR
117971Y3			109	AR	AR	AR	AR	AR	AR	AR	AR	AR	AR
117971Y4			109	AR	AR	AR	AR	AR	AR	AR	AR	AR	AR
117971Y5			109	AR	AR	AR	AR	AR	AR	AR	AR	AR	AR
¢ 118D2	1, 2	1009	6	36	36	36	36	36	36	36	36	36	36
¢ 118D6	9	1685	39	2	–	–	–	2	2	2	2	2	2
118H2			6	AR	AR	AR	AR	AR	AR	AR	AR	AR	AR
118H6			39	AR	–	–	–	AR	AR	AR	AR	AR	AR
118J2			6	AR	AR	AR	AR	AR	AR	AR	AR	AR	AR
118J6			39	AR	–	–	–	AR	AR	AR	AR	AR	AR
118S2			6	AR	AR	AR	AR	AR	AR	AR	AR	AR	AR
118S6			39	AR	–	–	–	AR	AR	AR	AR	AR	AR
118074	6	1509	30	–	–	–	–	–	–	–	–	–	1
118134			29	–	–	–	–	–	–	–	–	–	1
118135			29	–	–	–	–	–	–	–	–	–	1
118180	6	1485	29	–	–	–	–	–	–	–	–	–	1
118183	6	1501	30	–	–	–	–	–	–	–	–	–	2
118195			108	1	–	1	1	–	1	–	1	–	1
118227			4	1	–	1	1	–	–	–	–	–	1
118257			24	1	1	1	1	–	1	–	1	–	1

 # Quantity varies. Refer to indicated page(s) for explanation.

Part Number	Figure Number	Index Number	Page Number	Model R1820 -40	-40B	-54	-60	-65	-71	-73	-87	-95	-97
118383	49	4538	179	18	18	18	18	18	18	18	18	18	18
118384			134	–	–	–	1	–	–	–	–	–	–
118385			134	–	–	–	1	–	–	–	–	–	–
118386			116	9	9	9	9	9	9	9	9	9	9
118422			127, 134, 139, 143, 147, 153, 157	2	2	4	3	2	2	2	2	1	2
118433			9	@	@	@	@	@	@	@	@	@	@
118433N3	1, 2	1005	9	1	1	1	1	1	1	1	1	1	1
118481			123	–	–	–	–	–	–	–	–	–	@
118483			123	–	–	–	–	–	–	–	–	–	@
118509			32	–	–	1	1	–	1	–	1	–	1
118510			32	–	–	1	1	–	1	–	1	–	1
118528			168	@	@	–	–	@	@	@	@	–	@
118639			165	–	2	2	2	–	–	–	–	–	–
118640			165	–	2	2	2	–	–	–	–	–	–
118659			64	–	–	@	@	–	–	–	@	–	–
118678			165	–	–	2	2	–	–	–	–	–	–
118679			165	–	–	2	2	–	–	–	–	–	–
118684	29, 30	3272	93	4	4	4	4	4	4	4	4	4	4
118738	37	3714	112	8	8	8	8	8	8	8	8	8	8
118741			143	–	–	–	–	1	–	–	–	–	1
118742			143	–	–	–	–	1	–	–	–	–	1
118743			122	–	–	–	–	–	–	–	–	–	@
118744			62	–	–	1	1	–	–	–	–	–	–
118745			62	–	–	@	@	–	–	–	–	–	–
118811N1	21, 22	2806	73, 77, 78	3	3	3	3	3	3	3	3	3	3
	24	3006											
	25	3033											
* 118815	46	3866	118	18	18	18	18	–	–	–	18	–	–
118815Y1			118	AR	AR	AR	AR	–	–	–	AR	–	–
118865			108	–	–	–	–	–	–	–	–	–	1
118916			92	–	–	1	1	–	1	–	1	–	1
118940	7	1556	32	–	–	1	1	–	1	–	1	–	1
118941	7	1568	32	–	–	1	1	–	1	–	1	–	1
118942	7	1558	32	–	–	2	2	–	2	–	2	–	2
		1570											
118969			195	–	–	–	@	–	–	–	–	–	–
118969N2			195	–	–	–	2	–	–	–	–	–	–
118986			123	–	–	–	–	–	–	–	–	–	@
118987			124	–	–	–	–	–	–	–	–	–	@
118995			173	1	1	–	1	1	1	1	1	1	1
12D15			61	5	–	–	–	–	–	–	–	5	–
120016	21, 22	2868	73, 77, 78	3	3	3	3	3	3	3	3	3	3
	24	3008											
	25	3035											
120028			86	1	–	1	1	1	–	1	–	–	1
120078			122	–	–	–	–	–	–	–	–	–	@
120085			77	–	–	–	–	–	–	–	–	–	1
120123	12	2202	49	1	1	1	1	1	1	–	1	–	1
120205			163	–	2	2	2	–	–	–	–	–	–
120206			163	–	2	2	2	–	–	–	–	–	–
120215			134	–	–	–	2	–	–	–	–	–	–
120217			134	–	–	–	2	–	–	–	–	–	–
120219			163, 165	–	4	4	4	–	–	–	–	–	–
120222			165	–	2	2	2	–	–	–	–	–	–
120223			165	–	2	2	2	–	–	–	–	–	–
120224			165	–	2	2	2	–	–	–	–	–	–
120235N1			183	–	–	1	–	–	–	–	–	–	–
120236	14	2277	54	1	1	1	1	–	–	–	1	–	–
120237	14	2279	54	1	1	1	1	–	–	–	1	–	–
120239			54	1	1	1	1	–	–	–	1	–	–
120280	34	3483	99	–	–	1	–	–	–	–	–	–	–
120315	34	3523	101	–	–	1	–	–	–	–	–	–	–
	35	3552											
120335	34	3513	101	–	–	1	–	–	–	–	–	–	–
120337			99	–	–	1	–	–	–	–	–	–	–
120353			32	–	–	–	1	–	–	–	–	–	–
120398			178	–	–	–	–	–	–	–	–	–	1
120678	26	3068	79	1	1	1	1	1	1	1	1	1	1
120679	26	3066	79	1	1	1	1	1	1	1	1	1	1

AVIALOGS
WWW.AVIALOGS.COM

Part Number	Figure Number	Index Number	Page Number	Model R1820 -40	-40B	-54	-60	-65	-71	-73	-87	-95	-97
120708			101, 103	–	–	1	–	1	–	–	–	–	1
120709			101, 103	–	–	1	–	1	–	–	–	–	1
120724			80	1	1	1	1	1	1	1	1	1	1
120728			24	–	–	–	–	1	1	1	–	–	1
120733			24	–	–	–	–	1	1	1	–	–	1
120746	32	3373	97	1	1	–	1	–	–	–	1	1	–
120747	32	3377	97	1	1	–	1	–	–	–	1	1	–
120869	18	2512	60	1	–	–	–	–	–	–	–	1	–
120930			19	–	–	–	–	1	–	1	–	–	1
120931			19	–	–	–	–	1	–	1	–	–	1
± 120952	38	3952	122	9	9	9	9	9	9	9	9	9	9
120952Y1			122	AR	AR	AR	AR	AR	AR	AR	AR	AR	AR
120952Y15			122	AR	AR	AR	AR	AR	AR	AR	AR	AR	AR
120952Y16			122	AR	AR	AR	AR	AR	AR	AR	AR	AR	AR
120952Y17			122	AR	AR	AR	AR	AR	AR	AR	AR	AR	AR
120952Y18			122	AR	AR	AR	AR	AR	AR	AR	AR	AR	AR
120952Y19			122	AR	AR	AR	AR	AR	AR	AR	AR	AR	AR
120952Y2			122	AR	AR	AR	AR	AR	AR	AR	AR	AR	AR
120952Y20			122	AR	AR	AR	AR	AR	AR	AR	AR	AR	AR
120952Y3			122	AR	AR	AR	AR	AR	AR	AR	AR	AR	AR
120952Y4			122	AR	AR	AR	AR	AR	AR	AR	AR	AR	AR
120952Y5			122	AR	AR	AR	AR	AR	AR	AR	AR	AR	AR
1210			71	12	–	–	–	12	–	–	–	12	–
123D4			198	–	–	–	9	1	–	1	–	–	1
123D9			178	–	–	–	–	–	–	–	–	–	1
124D107	15	2324	56	1	1	1	1	1	1	1	1	1	1
124D112	27, 28	3200	87	1	1	1	1	1	1	1	1	1	1
124D115	13	2256	52	3	3	–	3	3	3	3	3	3	3
124D118	9, 10, 11	1799	45	1	1	1	1	1	1	1	1	1	1
124D130	36	3636	106	–	–	–	–	20	–	–	–	–	20
124D161	14	2297	54	3	3	3	3	–	–	–	3	–	–
124D58	27, 28	3210	87	2	2	2	2	2	2	2	2	2	2
124D75	35	3568	102	2	2	–	2	–	2	2	2	2	–
124D81	27, 28	3198	87	2	2	2	2	2	2	2	2	2	2
124D82	27, 28	3194	87	2	2	2	2	2	2	2	2	2	2
124D83	9, 10, 11	1861	47	1	1	1	1	1	1	1	1	1	1
124D95	38	3844	118	72	72	72	72	72	72	72	72	72	72
125D114	8	1624	34	4	4	4	4	4	4	4	4	4	4
¢ 126D145	2	1011	6	2	2	–	2	–	2	2	2	2	–
¢ 126D154	4	1278	16	2	2	2	2	2	2	2	2	2	2
¢ 126D169	27, 28	3138	85	1	1	1	1	1	1	1	1	1	1
¢ 126D177	27	3126	84, 85	1	1	1	1	1	1	1	1	1	1
	28	3134											
126H145			6	AR	AR	–	AR	–	AR	AR	AR	AR	–
126H154			16	AR	AR	AR	AR	AR	AR	AR	AR	AR	AR
126H169			85	AR	AR	AR	AR	AR	AR	AR	AR	AR	AR
126H177			84, 85	AR	AR	AR	AR	AR	AR	AR	AR	AR	AR
126J145			6	AR	AR	–	AR	–	AR	AR	AR	AR	–
126J154			16	AR	AR	AR	AR	AR	AR	AR	AR	AR	AR
126J169			85	AR	AR	AR	AR	AR	AR	AR	AR	AR	AR
126J177			84, 85	AR	AR	AR	AR	AR	AR	AR	AR	AR	AR
126S145			6	AR	AR	–	AR	–	AR	AR	AR	AR	–
126S154			16	AR	AR	AR	AR	AR	AR	AR	AR	AR	AR
126S169			85	AR	AR	AR	AR	AR	AR	AR	AR	AR	AR
126S177			84, 85	AR	AR	AR	AR	AR	AR	AR	AR	AR	AR
126034	53	4837	187	–	–	1	–	–	–	–	–	–	–
126076			186	–	–	1	–	–	–	–	–	–	–
126077			186	–	–	1	–	–	–	–	–	–	–
126109	53	4835	187	–	–	1	–	–	–	–	–	–	–
126140	4	1294	17	2	2	2	2	2	2	2	2	2	2
126280	9, 10, 11	1823	46	1	1	1	1	1	1	1	1	1	1
126285	9, 10, 11	1827	46	1	1	1	1	1	1	1	1	1	1
126323	38	3886	120	36	36	36	36	36	36	36	36	36	36
126349	18	2554	61, 64	1	1	1	1	–	–	–	1	1	–
	19	2642											
126738			93	3	3	3	3	3	3	3	3	3	3
126739			92	1	1	1	1	1	1	1	1	1	1
126942			50	–	–	@	–	–	–	–	–	–	–
127280	50	4518	176	–	–	–	129 ft	129 ft	129 ft	129 ft	129 ft	129 ft	129 ft

Part Number	Figure Number	Index Number	Page Number	Model R1820									
				-40	-40B	-54	-60	-65	-71	-73	-87	-95	-97
127281	50	4504	176	–	–	–	18	18	18	18	18	18	18
127282	50	4506	176	–	–	–	18	18	18	18	18	18	18
127283N11	50	4510	176	–	–	–	9	9	9	9	9	9	9
127283N2	50	4508	176	–	–	–	9	9	9	9	9	9	9
127284	50	4514	176	–	–	–	18	18	18	18	18	18	18
127298N	50	4512	176	–	–	–	18	18	18	18	18	18	18
127322			127, 139, 148, 153	2	–	3	–	–	2	–	2	–	–
127351			117	9	9	9	9	9	9	9	9	9	9
127358			99	–	–	1	–	–	–	–	–	–	–
127527	20	2830	71	1	1	1	1	1	1	1	1	1	1
127549			128, 135, 140, 149, 154	8	–	6	6	–	8	–	8	–	–
127628N1			4	1	1	1	1	1	1	1	1	1	1
127746	9, 10, 11	1855	47	1	1	1	1	1	1	1	1	1	1
128061	20	2814	67	1	1	1	1	1	1	1	1	1	1
128297			45	–	–	1	–	–	–	–	–	–	–
128298			45	–	–	1	–	–	–	–	–	–	–
128299			45	–	–	1	–	–	–	–	–	–	–
128300			45	–	–	@	–	–	–	–	–	–	–
128563	12	2218	50	1	1	1	1	1	1	–	1	–	1
128564	12	2217	50	1	1	1	1	1	1	–	1	–	1
128569			92	1	1	1	1	1	1	1	1	1	1
128570	46	4306	168	–	–	18	–	–	–	–	–	–	–
128573			108	1	1	1	1	1	1	1	1	1	1
129D64	5	1454	28, 32	1	1	1	1	1	1	1	1	1	1
	7	1564											
129D66	4	1300	17	1	1	1	1	1	1	1	1	1	1
129D67	9	1771	44	1	–	–	–	1	1	1	1	1	1
129D78	4	1194, 1198	11, 12	1	1	2	2	2	2	2	1	1	2
129D88			28, 32	@	@	@	@	@	@	@	@	@	@
129014	12	2210	48, 49	#	2	2	2	2	2	2	2	–	2
129143			34	1	–	–	–	1	1	1	1	1	1
129442	58	5158	198	–	–	–	9	–	–	–	–	–	–
129906	58	5150	198	–	–	–	9	–	–	–	–	–	–
13D23	27	3158	86	1	–	1	1	1	–	1	–	–	1
13D35			41	4	4	4	4	4	4	4	4	4	4
13D36			61	1	–	–	–	–	–	–	–	1	–
13D38			116	36	36	36	36	36	36	36	36	36	36
13D54	18	2522	60	2	–	–	–	–	–	–	–	2	–
13D55	17, 18, 19	1264	15	1	1	1	1	1	1	1	1	1	1
13D59			24	1	–	–	–	1	–	1	1	1	1
± 13D6	23	2956	75	2	2	2	2	2	2	2	2	2	2
13H6			75	AR	AR	AR	AR	AR	AR	AR	AR	AR	AR
13J6			75	AR	AR	AR	AR	AR	AR	AR	AR	AR	AR
13S6			75	AR	AR	AR	AR	AR	AR	AR	AR	AR	AR
130D46	5	1452	28	1	1	1	1	1	1	1	1	1	1
130D50			12	1	1	–	–	–	–	–	1	1	–
130142N3	4	1308	17	2	2	2	–	–	2	–	2	2	#
130321	14	2281	54	1	1	1	1	–	–	–	1	–	–
131036	46	4304	168	18	18	18	18	18	18	18	18	18	18
132D1			15	1	1	1	1	1	1	1	1	1	1
137D11	9, 10, 11	1767	44	5	5	5	5	5	5	5	5	5	5
143D4	48	4414	172	–	–	4	–	–	–	–	–	–	–
146D2			4	1	1	1	1	1	1	1	1	1	1
147D4			15	2	2	2	2	2	2	2	2	2	2
14981	5	1436	27	1	1	1	1	1	1	1	1	1	1
150D2	39 to 45	4277	167	27	27	27	27	27	27	27	27	27	27
150D5	47	4410	172	4	4	–	4	4	4	4	4	4	4
150D9	52	4780	185	2	–	–	–	2	–	2	2	–	2
155D49	29, 30	3310	94	1	1	1	1	1	1	–	1	1	–
155D50	29, 30	3312	94	1	1	–	1	1	1	–	1	1	–
155D58			95	–	–	1	–	1	1	1	–	–	1
155D59			94	–	–	–	–	1	1	1	–	–	1
156D11			29, 32	–	–	2	2	–	2	–	2	–	3
157D10			186	–	–	@	–	–	–	–	–	–	–
157D16	53	4828	186, 188	–	–	4	4	–	–	–	–	–	–
	54	4874											
157D8			29, 32	–	–	2	2	–	2	–	2	–	3
159D17	6	1481, 1519	29, 31, 32	–	–	–	1	–	–	–	–	–	2
159D3			188	–	1	–	–	–	–	–	–	–	–

 # Quantity varies. Refer to indicated page(s) for explanation.

Part Number	Figure Number	Index Number	Page Number	Model R1820 -40	-40B	-54	-60	-65	-71	-73	-87	-95	-97
163D20	52	4760	185	10	–	–	–	10	–	10	10	–	10
163D50	4	1176	11	1	1	1	1	1	1	1	1	1	1
163D51	4	1178	11	1	1	1	1	1	1	1	1	1	1
163D55			12, 188	–	1	–	–	–	1	–	–	2	–
163D63	54	4888	188	–	–	–	2	–	–	–	–	–	–
163D64			27	1	1	1	1	1	1	1	1	1	1
163D85	53	4830	187	–	–	2	–	–	–	–	–	–	–
163D87	6	1479	29, 32	–	–	–	1	–	–	–	–	–	1
163D90	7	1554	32	–	–	1	1	–	1	–	1	–	1
166D3	6	1517	31	–	–	–	–	–	–	–	–	–	1
169D11			29, 32	–	–	1	1	–	1	–	1	–	1
17D14			66	3	3	3	3	–	–	–	3	–	–
17D20	4	1227	12	1	1	1	1	1	1	1	1	1	1
17D26			24	3	3	3	3	3	3	3	3	3	3
172D6			183	–	–	1	–	–	–	–	–	–	–
18D28			85	1	–	–	1	1	–	1	–	–	1
186D8	53	4831	187, 188	–	–	1	1	–	–	–	–	–	–
	54	4878											
189D58			117	18	–	–	–	18	18	18	18	18	–
189D59			120	27	27	27	27	27	27	27	27	27	27
¢ 19D16	4	1266	15	12	12	12	12	12	12	12	12	12	12
19H16			15	AR	AR	AR	AR	AR	AR	AR	AR	AR	AR
19J16			15	AR	AR	AR	AR	AR	AR	AR	AR	AR	AR
19S16			15	AR	AR	AR	AR	AR	AR	AR	AR	AR	AR
19965	46	3872	118	18	18	18	18	18	18	18	18	18	18
2D1	9, 10	1789	45, 127, 134, 139, 143,	42	44	40	42	42	42	42	42	41	42
	46	4340	148, 153, 157, 168										
2D39			120	@	@	–	@	@	@	@	@	@	@
2D40	51	4714	183	10	10	10	10	10	10	10	10	10	10
2D7	5	1430, 1438	27	12	12	12	12	12	12	12	12	12	12
20D10			86	1	–	1	1	1	–	1	–	–	1
± 20D12	11	1741	44, 62, 99	4	2	3	2	3	2	–	2	–	3
	19	2608											
	34	3485											
20D9	29, 30	3302	94, 99	1	1	2	1	1	1	1	1	1	1
	34	3489											
20H12			99	–	–	AR	–	AR	–	–	–	–	AR
20J12			99	–	–	AR	–	AR	–	–	–	–	AR
20S12			99	–	–	AR	–	AR	–	–	–	–	AR
2011D5			32	–	–	1	1	–	1	–	1	–	1
2017D10	20	2816	67	1	1	1	1	1	1	1	1	1	1
2019D19	29, 30	3264	92	1	1	1	1	1	1	1	1	1	1
2019D3	26	3070	79	1	1	1	1	1	1	1	1	1	1
2019D7	21, 22	2864	72	1	1	1	1	1	1	1	1	1	1
2019D8			18	–	–	–	–	1	–	1	–	–	1
2025D2	55	4990	192	2	–	–	–	–	–	–	–	2	–
¢ 2028D15	55	4972	191	2	–	–	–	–	–	–	–	2	–
¢ 2028D21	27, 28	3110	82	3	3	3	3	3	3	3	3	3	3
¢ 2028D32	9, 10, 11	1687	39	2	2	2	2	2	2	2	2	2	2
¢ 2028D37	4	1274	15	3	3	3	3	3	3	3	3	3	3
¢ 2028D7	55	4970	191	4	–	–	–	–	–	–	–	4	–
¢ 2028D8	5	1374	24	6	6	6	6	6	6	6	6	6	6
2028H15			191	AR	–	–	–	–	–	–	–	AR	–
2028H21			82	AR	AR	AR	AR	AR	AR	AR	AR	AR	AR
2028H32			39	AR	AR	AR	AR	AR	AR	AR	AR	AR	AR
2028H37			15	AR	AR	AR	AR	AR	AR	AR	AR	AR	AR
2028H7			191	AR	–	–	–	–	–	–	–	AR	–
2028H8			24	AR	AR	AR	AR	AR	AR	AR	AR	AR	AR
2028J15			191	AR	–	–	–	–	–	–	–	AR	–
2028J21			82	AR	AR	AR	AR	AR	AR	AR	AR	AR	AR
2028J32			39	AR	AR	AR	AR	AR	AR	AR	AR	AR	AR
2028J37			15	AR	AR	AR	AR	AR	AR	AR	AR	AR	AR
2028J7			191	AR	–	–	–	–	–	–	–	AR	–
2028J8			25	AR	AR	AR	AR	AR	AR	AR	AR	AR	AR
2028S15			191	AR	–	–	–	–	–	–	–	AR	–
2028S21			82	AR	AR	AR	AR	AR	AR	AR	AR	AR	AR
2028S32			39	AR	AR	AR	AR	AR	AR	AR	AR	AR	AR
2028S37			15	AR	AR	AR	AR	AR	AR	AR	AR	AR	AR
2028S7			191	AR	–	–	–	–	–	–	–	AR	–
2028S8			25	AR	AR	AR	AR	AR	AR	AR	AR	AR	AR

AVIALOGS
WWW.AVIALOGS.COM

Part Number	Figure Number	Index Number	Page Number	Model R1820									
				-40	-40B	-54	-60	-65	-71	-73	-87	-95	-97
¢ 2029D17	5	1396	26	3	3	3	3	3	3	3	3	3	3
¢ 2029D18	5	1380	25	2	2	2	2	2	2	2	2	2	2
¢ 2029D19	27, 28	3118	84	2	2	2	2	2	2	2	2	2	2
¢ 2029D22	27, 28	3116	84	1	1	1	1	1	1	1	1	1	1
¢ 2029D67	4	1280	16	13	13	13	13	13	13	13	13	13	13
¢ 2029D9	9, 10, 11	1701	41	6	6	6	6	6	6	6	6	6	6
2029H17			26	AR	AR	AR	AR	AR	AR	AR	AR	AR	AR
2029H18			25	AR	AR	AR	AR	AR	AR	AR	AR	AR	AR
2029H19			84	AR	AR	AR	AR	AR	AR	AR	AR	AR	AR
2029H22			84	AR	AR	AR	AR	AR	AR	AR	AR	AR	AR
2029H67			16	AR	AR	AR	AR	AR	AR	AR	AR	AR	AR
2029H9			41	AR	AR	AR	AR	AR	AR	AR	AR	AR	AR
2029J17			26	AR	AR	AR	AR	AR	AR	AR	AR	AR	AR
2029J18			25	AR	AR	AR	AR	AR	AR	AR	AR	AR	AR
2029J19			84	AR	AR	AR	AR	AR	AR	AR	AR	AR	AR
2029J22			84	AR	AR	AR	AR	AR	AR	AR	AR	AR	AR
2029J67			16	AR	AR	AR	AR	AR	AR	AR	AR	AR	AR
2029J9			41	AR	AR	AR	AR	AR	AR	AR	AR	AR	AR
2029S17			26	AR	AR	AR	AR	AR	AR	AR	AR	AR	AR
2029S18			25	AR	AR	AR	AR	AR	AR	AR	AR	AR	AR
2029S19			84	AR	AR	AR	AR	AR	AR	AR	AR	AR	AR
2029S22			84	AR	AR	AR	AR	AR	AR	AR	AR	AR	AR
2029S67			16	AR	AR	AR	AR	AR	AR	AR	AR	AR	AR
2029S9			41	AR	AR	AR	AR	AR	AR	AR	AR	AR	AR
¢ 2030D10	4	1276	15	1	1	1	1	1	1	1	1	1	1
¢ 2030D23	27	3112	82	3	3	3	3	3	3	3	3	3	3
	28	3114											
¢ 2030D31	4	1282	16	2	2	2	2	2	2	2	2	2	2
¢ 2030D9	5	1382, 1384	25	4	4	4	4	4	4	4	4	4	4
2030H10			16	AR	AR	AR	AR	AR	AR	AR	AR	AR	AR
2030H23			82	AR	AR	AR	AR	AR	AR	AR	AR	AR	AR
2030H31			16	AR	AR	AR	AR	AR	AR	AR	AR	AR	AR
2030H9			25	AR	AR	AR	AR	AR	AR	AR	AR	AR	AR
2030J10			16	AR	AR	AR	AR	AR	AR	AR	AR	AR	AR
2030J23			82	AR	AR	AR	AR	AR	AR	AR	AR	AR	AR
2030J31			16	AR	AR	AR	AR	AR	AR	AR	AR	AR	AR
2030J9			25	AR	AR	AR	AR	AR	AR	AR	AR	AR	AR
2030S10			16	AR	AR	AR	AR	AR	AR	AR	AR	AR	AR
2030S23			82	AR	AR	AR	AR	AR	AR	AR	AR	AR	AR
2030S31			16	AR	AR	AR	AR	AR	AR	AR	AR	AR	AR
2030S9			25	AR	AR	AR	AR	AR	AR	AR	AR	AR	AR
¢ 2031D20	1, 2	1015	6, 11	9	9	9	9	9	9	9	9	9	9
	4	1186, 1188											
¢ 2031D22	4	1184, 1190	11	21	21	21	21	21	21	21	21	21	21
2031H20			7, 11	AR	AR	AR	AR	AR	AR	AR	AR	AR	AR
2031H22			11	AR	AR	AR	AR	AR	AR	AR	AR	AR	AR
2031J20			7, 11	AR	AR	AR	AR	AR	AR	AR	AR	AR	AR
2031J22			11	AR	AR	AR	AR	AR	AR	AR	AR	AR	AR
2031S20			7, 11	AR	AR	AR	AR	AR	AR	AR	AR	AR	AR
2031S22			11	AR	AR	AR	AR	AR	AR	AR	AR	AR	AR
¢ 2032D10	5	1390, 1394	25, 26	12	12	12	12	12	12	12	12	12	12
¢ 2032D7	2	1013	6	2	2	–	2	–	2	2	2	2	–
2032H10			25, 26	AR	AR	AR	AR	AR	AR	AR	AR	AR	AR
2032H7			6	AR	AR	–	AR	–	AR	AR	AR	AR	–
2032J10			25, 26	AR	AR	AR	AR	AR	AR	AR	AR	AR	AR
2032J7			6	AR	AR	–	AR	–	AR	AR	AR	AR	–
2032S10			25, 26	AR	AR	AR	AR	AR	AR	AR	AR	AR	AR
2032S7			6	AR	AR	–	AR	–	AR	AR	AR	AR	–
2034D11	56	5052	194, 197	2	–	–	2	2	–	2	–	–	2
	57	5102											
2037D21	3	1104	9	1	1	1	1	1	1	1	1	1	1
2037D59			53	1	1	1	1	–	–	–	1	–	–
2043D62	23	2970	75	4	4	4	4	4	4	4	4	4	4
¢ 2043D69			25	8	8	8	8	8	8	8	8	8	8
¢ 2043D73	5	1392	26	8	8	8	8	8	8	8	8	8	8
2043H69			26	AR	AR	AR	AR	AR	AR	AR	AR	AR	AR
2043H73			26	AR	AR	AR	AR	AR	AR	AR	AR	AR	AR
2043J69			26	AR	AR	AR	AR	AR	AR	AR	AR	AR	AR
2043J73			26	AR	AR	AR	AR	AR	AR	AR	AR	AR	AR
2043S69			26	AR	AR	AR	AR	AR	AR	AR	AR	AR	AR

AVIALOGS
WWW.AVIALOGS.COM

Part Number	Figure Number		Page Number	Model R1820									
				-40	-40B	-54	-60	-65	-71	-73	-87	-95	-97
2043S73			26	AR	AR	AR	AR	AR	AR	AR	AR	AR	AR
2045D14	4	1206	12	18	18	18	18	18	18	18	18	18	18
2045D19	3	1106	9	9	9	9	9	9	9	9	9	9	9
2045D21	1, 2	1057	8	8	8	8	8	8	8	8	8	8	8
2045D22	1, 2	1055	8	8	8	8	8	8	8	8	8	8	8
* 2045D23			119	@	@	@	@	@	@	@	@	@	@
2045D24			112	8	8	–	–	8	8	8	8	8	8
* 2045D41			120	18	18	–	18	18	18	18	18	18	18
2045D44	37	3720	112	8	8	8	8	8	8	8	8	8	8
2045D51	38	3882	120	162	162	180	162	162	162	162	162	162	162
2045J23			119	AR	AR	AR	AR	AR	AR	AR	AR	AR	AR
2045J41			120	AR	AR	–	AR	AR	AR	AR	AR	AR	AR
2045S23			119	AR	AR	AR	AR	AR	AR	AR	AR	AR	AR
2045S41			120	AR	AR	–	AR	AR	AR	AR	AR	AR	AR
20513	55	4996	192	2	–	–	–	–	–	–	–	2	–
2052D12			72	1	–	–	–	1	–	–	–	–	1
2052D21	21, 22	2862	72	1	1	1	1	1	1	1	1	1	1
2054D7			71	12	–	–	–	12	–	–	–	12	–
2057D17	1	1047	8	–	–	10	–	10	–	–	–	–	10
2058D32			168	@	@	@	@	@	@	@	@	@	@
2058D33			48, 49	@	@	@	@	@	@	–	@	–	@
2058D54			168	18	18	18	18	18	18	18	18	18	18
2058D80	12	2212	49	1	1	1	1	1	1	–	1	–	1
2059D15			17	1	1	1	1	1	1	1	1	1	1
2059D25			54	1	1	1	1	–	–	–	1	–	–
2062D17			183	–	–	1	–	–	–	–	–	–	–
2067D1			58	@	–	–	–	@	–	–	–	–	–
2067D10	8	1626	34	4	4	4	4	4	4	4	4	4	4
2067D12	29, 30	3320	95	1	1	1	1	1	1	1	1	1	1
2067D19	19	2618	62	4	4	4	4	–	–	–	4	–	–
2067D2	29, 30	3260	92	1	1	1	1	1	1	1	1	1	1
2067D21	16	2428	58	1	1	1	1	1	1	1	1	1	1
2067D8	30	3300	94	1	1	–	1	–	–	–	1	1	–
2067D9	29	3294	93	–	–	1	–	1	1	1	–	–	1
2069D20	36	3626	105	–	–	–	–	24	–	–	–	–	24
2070D1	5	1400	26	2	2	2	2	2	2	2	2	2	2
2070D11	5	1414	27	4	4	4	4	4	4	4	4	4	4
2070D29			127, 133, 139, 142, 147, 152, 157, 160, 163	9	8	9	7	9	9	9	9	6	9
2070D64	1, 2	1021	7	3	3	3	3	3	3	3	3	3	3
2072D7	5	1402	26	1	1	1	1	1	1	1	1	1	1
2072D9	11	1751	44	1	–	–	–	1	1	–	–	–	1
2075D14	30	3298	93	1	1	–	1	–	–	–	1	1	–
2075D15	29	3292	93	–	–	1	–	1	1	1	–	–	1
2075D16	29, 30	3318	95	1	1	1	1	1	1	1	1	1	1
2075D7	34	3527	101, 102, 105	1	1	1	1	1	1	1	1	1	1
	35	3558											
	36	3622											
2077D20	31, 32	3360	97	1	1	–	1	–	1	1	1	1	–
2077D24	34	3509	101, 105	–	–	1	–	1	–	–	–	–	1
	36	3604											
2077D9	31, 32	3364	97	6	6	–	6	–	6	6	6	6	–
2083D1	3	1114	9, 41, 43	9	8	8	8	9	9	9	9	9	9
	9, 10, 11	1713											
	9, 10	1721											
	9, 11	1731											
2083D3			18	–	–	–	–	2	–	2	–	–	2
2083D45	38	3880	119	9	9	9	9	9	9	9	9	9	9
2083D57	46	3854	118	36	36	36	36	36	36	36	36	36	36
2084D8	29, 30	3304	94	1	1	1	1	1	1	1	1	1	1
2087D1			128, 135, 140, 143, 144, 149, 150, 154, 158, 160, 163	58	24	21	15	55	68	52	58	50	55
2087D2	6	1491, 1497, 1505	29, 30, 167, 178	37	37	38	38	38	38	38	38	33	42
	49, 50	4532											
2087D3	39	3982	129, 136	6	2	–	–	–	–	–	–	–	–
	40	4036											
2087D6	54	4886	188	–	–	–	3	–	–	–	–	–	–

AVIALOGS
WWW.AVIALOGS.COM

Part Number	Figure Number	Index Number	Page Number	Model R1820									
				-40	-40B	-54	-60	-65	-71	-73	-87	-95	-97
2087D9	7	1562, 1574	32, 135, 185, 187	12	–	3	8	12	2	12	14	–	14
	52	4776											
2093D14	38	3884	120	180	180	180	180	180	180	180	180	180	180
2093D16	4	1208	12	18	18	18	18	18	18	18	18	18	18
2093D17	46	3852	118	36	36	36	36	36	36	36	36	36	36
2093D7	51	4708	183	8	8	8	8	8	8	8	8	8	8
2097D10	56	5064	195, 197	2	–	–	2	2	–	2	–	–	1
	57	5114											
2097D4			199	9	–	–	9	–	–	–	–	–	–
21D80			103, 106	@	–	–	–	@	–	–	–	–	–
21D92	34	3529	101, 103	1	1	1	1	–	1	1	1	1	–
	35	3574											
21D93	36	3638	106	–	–	–	–	1	–	–	–	–	1
2101D3	4	1231	12, 136	5	5	5	9	5	5	5	5	5	5
2101D4			28, 32, 106	2	2	2	2	22	2	2	2	2	22
2101D5	29, 30	3280, 3284	93, 195, 197	6	4	4	6	6	4	6	4	4	5
	56	5068											
	57	5118											
2101D6	3	1108	9	9	9	9	9	9	9	9	9	9	9
2101D7	36	3628	105	–	–	–	–	24	–	–	–	–	24
2105D12	18	2530	61	1	–	–	–	–	–	–	–	1	–
2108D3			172	1	1	–	1	–	–	–	–	–	–
2109D4			134	–	–	–	2	–	–	–	–	–	–
2119D12	37	3712	111	8	8	8	8	8	8	8	8	8	8
2119D17	37	3702, 3710	109, 111	9	9	9	9	9	9	9	9	9	9
2125D2	1, 2	1022	7	10	10	10	10	10	10	10	10	10	10
2125D3	2	1037	7	2	2	–	2	–	2	2	2	2	–
2125D5	1, 2	1031	7	2	2	2	2	2	2	2	2	2	2
2126D1	31	3370	7, 97	1	1	–	1	2	–	–	1	1	2
2132D14			33	1	1	1	1	1	1	1	1	1	1
¢ 2134D85	5	1398	26	2	2	2	2	2	2	2	2	2	2
2134H85			26	AR	AR	AR	AR	AR	AR	AR	AR	AR	AR
2134J85			26	AR	AR	AR	AR	AR	AR	AR	AR	AR	AR
2134S85			26	AR	AR	AR	AR	AR	AR	AR	AR	AR	AR
¢ 2135D100	1, 2	1017	7	4	4	4	4	4	4	4	4	4	4
¢ 2135D135	4	1284	16	2	2	2	2	2	2	2	2	2	2
¢ 2135D75			26	2	–	2	2	–	2	–	2	–	2
¢ 2135D90	5	1386	25	3	3	3	3	3	3	3	3	3	3
2135H100			7	AR	AR	AR	AR	AR	AR	AR	AR	AR	AR
2135H135			16	AR	AR	AR	AR	AR	AR	AR	AR	AR	AR
2135H75			26	AR	–	AR	AR	–	AR	–	AR	–	AR
2135H90			25	AR	AR	AR	AR	AR	AR	AR	AR	AR	AR
2135J100			7	AR	AR	AR	AR	AR	AR	AR	AR	AR	AR
2135J135			16	AR	AR	AR	AR	AR	AR	AR	AR	AR	AR
2135J75			26	AR	–	AR	AR	–	AR	–	AR	–	AR
2135J90			25	AR	AR	AR	AR	AR	AR	AR	AR	AR	AR
2135S100			7	AR	AR	AR	AR	AR	AR	AR	AR	AR	AR
2135S135			16	AR	AR	AR	AR	AR	AR	AR	AR	AR	AR
2135S75			26	AR	–	AR	AR	–	AR	–	AR	–	AR
2135S90			25	AR	AR	AR	AR	AR	AR	AR	AR	AR	AR
¢ 2136D55	38	3820	116	72	72	72	72	72	72	72	72	72	72
2136H55			116	AR	AR	AR	AR	AR	AR	AR	AR	AR	AR
2136J55			116	AR	AR	AR	AR	AR	AR	AR	AR	AR	AR
2136S55			116	AR	AR	AR	AR	AR	AR	AR	AR	AR	AR
¢ 2137D80	4	1288	16	5	5	5	5	5	5	5	5	5	5
2137H80			17	AR	AR	AR	AR	AR	AR	AR	AR	AR	AR
2137J80			17	AR	AR	AR	AR	AR	AR	AR	AR	AR	AR
2137S80			17	AR	AR	AR	AR	AR	AR	AR	AR	AR	AR
¢ 2138D150	4	1286	16	8	8	8	8	8	8	8	8	8	8
2138H150			16	AR	AR	AR	AR	AR	AR	AR	AR	AR	AR
2138J150			16	AR	AR	AR	AR	AR	AR	AR	AR	AR	AR
2138S150			16	AR	AR	AR	AR	AR	AR	AR	AR	AR	AR
¢ 2139D145			16	8	8	8	8	8	8	8	8	8	8
2139H145			16	AR	AR	AR	AR	AR	AR	AR	AR	AR	AR
2139J145			16	AR	AR	AR	AR	AR	AR	AR	AR	AR	AR
2139S145			16	AR	AR	AR	AR	AR	AR	AR	AR	AR	AR
2142D1	1, 2	1027	7, 26	#	#	#	#	#	#	#	#	#	#
	5	1408											
2142D2	1, 2	1029	7	1	1	1	1	1	1	1	1	1	1

 # Quantity varies. Refer to indicated page(s) for explanation.

Part Number	Figure Number	Index Number	Page Number	Model R1820									
				-40	-40B	-54	-60	-65	-71	-73	-87	-95	-97
¢ 2144D75	9, 10, 11	1683	39	2	2	2	2	2	2	2	2	2	2
¢ 2144D85	27	3156	85	4	–	4	4	4	–	4	–	–	4
2144H75			39	AR	AR	AR	AR	AR	AR	AR	AR	AR	AR
2144H85			85	AR	–	AR	AR	AR	–	AR	–	–	AR
2144J75			39	AR	AR	AR	AR	AR	AR	AR	AR	AR	AR
2144J85			86	AR	–	AR	AR	AR	–	AR	–	–	AR
2144S75			39	AR	AR	AR	AR	AR	AR	AR	AR	AR	AR
2144S85			86	AR	–	AR	AR	AR	–	AR	–	–	AR
¢ 2145D95	38	3822	116	36	36	36	36	36	36	36	36	36	36
2145H95			116	AR	AR	AR	AR	AR	AR	AR	AR	AR	AR
2145J95			116	AR	AR	AR	AR	AR	AR	AR	AR	AR	AR
2145S95			116	AR	AR	AR	AR	AR	AR	AR	AR	AR	AR
¢ 2146D55	38	3824	116	9	9	9	9	9	9	9	9	9	9
¢ 2146D95	5	1388	25	1	1	1	1	1	1	1	1	1	1
2146H55			116	AR	AR	AR	AR	AR	AR	AR	AR	AR	AR
2146H95			25	AR	AR	AR	AR	AR	AR	AR	AR	AR	AR
2146J55			116	AR	AR	AR	AR	AR	AR	AR	AR	AR	AR
2146J95			25	AR	AR	AR	AR	AR	AR	AR	AR	AR	AR
2146S55			116	AR	AR	AR	AR	AR	AR	AR	AR	AR	AR
2146S95			25	AR	AR	AR	AR	AR	AR	AR	AR	AR	AR
2163D15			168	90	90	90	90	–	–	–	90	–	–
2174D1	6	1483	29	–	–	–	–	–	–	–	–	–	1
2174D2	6	1487	29	–	–	–	–	–	–	–	–	–	1
2178D10	29, 30	3258	92	1	1	1	1	1	1	1	1	1	1
2178D11			92	1	1	1	1	1	1	1	1	1	1
2178D4			92	1	–	–	–	1	–	–	–	1	–
22D1	57	5124	195, 198	8	–	–	8	8	–	8	–	–	4
22D3	4	1312	18, 30	#	#	#	–	–	#	–	#	#	#
	6	1513											
22D30	56	5074	195	–	–	–	8	–	–	–	–	–	–
22D34			195	8	–	–	–	–	–	–	–	–	–
22D6	55	5002	192	6	–	–	–	–	–	–	–	6	–
23D30	4	1180	11	2	2	2	2	2	2	2	2	2	2
23D43			46	–	–	–	–	–	–	–	2	–	2
23065	46	3832	117	18	18	18	18	18	18	18	18	18	18
23066	46	3834	117	18	18	18	18	18	18	18	18	18	18
23328			27	@	@	@	@	@	@	@	@	@	@
23328N3	5	1434, 1460	27	2	2	2	2	2	2	2	2	2	2
23756			192	–	–	–	–	–	–	–	–	2	–
24391N	49	4540	179	18	18	18	18	18	18	18	18	18	18
24876			172	@	–	–	–	–	–	–	–	@	–
25189			192	2	–	–	–	–	–	–	–	2	–
25520			119	@	–	–	–	–	–	–	–	@	–
25677	47, 48	4426	172	2	2	2	2	2	2	2	2	2	2
25888	16	2420	57	1	1	1	1	1	1	1	1	1	1
± 25937	5	1368	24	1	1	1	1	1	1	1	1	1	1
25937Y10			24	AR	AR	AR	AR	AR	AR	AR	AR	AR	AR
26085	33	3412	97, 99	1	–	1	1	1	–	1	–	–	1
	34	3487											
26226			34	1	1	1	1	1	1	1	1	1	1
26240	13	2254	52	1	1	–	1	1	1	1	1	1	1
27D1	4	1314	18, 31, 118, 167, 192, 195, 198	#	#	#	89	89	#	89	#	#	#
	6	1515											
	38	3846											
	55	5004											
	56	5076											
	57	5126											
27D107			87	@	@	@	@	@	@	@	@	@	@
27D111	39	3962	129, 136, 140, 144, 150, 154, 159	2	2	2	2	2	2	2	2	2	2
	40	4016											
	41	4066											
	42	4116											
	43	4166											
	44	4198											
	45	4237											
27D118	5	1422	27, 66	4	4	4	4	3	3	3	4	3	3
27D125	56	5066	195, 197	2	–	–	2	2	–	2	–	–	1
	57	5116											

 # Quantity varies. Refer to indicated page(s) for explanation.

AVIALOGS
WWW.AVIALOGS.COM

Part Number	Figure Number	Index Number	Page Number	Model R1820									
				-40	-40B	-54	-60	-65	-71	-73	-87	-95	-97
27D130			127, 128, 134, 135, 139, 140, 142, 143, 144, 147, 148, 149, 150, 153, 154, 157, 158, 160, 161, 162, 163, 164, 165, 167	#	#	#	#	#	#	#	#	#	#
27D131			135	–	–	–	6	–	–	–	–	–	–
27D156	31, 32	3354	97, 99	1	1	1	1	1	1	1	1	1	1
	33	3404											
	34	3479											
27D159	9, 10, 11	1863	47, 87	6	6	6	6	6	6	6	6	6	6
	27, 28	3196, 3202											
27D168	14	2283	54	1	1	1	1	–	–	–	1	–	–
27D183			128, 143, 149, 154, 158, 160, 163	34	4	4	4	34	34	34	34	32	34
27D202	18	2683	65, 66	1	1	1	1	–	–	–	1	1	–
	19	2733											
27D220	13	2258	52, 87	5	5	2	5	5	5	5	5	5	5
	27, 28	3212											
27D231	14	2299	54	3	3	3	3	–	–	–	3	–	–
27D24	52	4774, 4782	185, 186	14	–	–	–	14	–	14	14	–	14
27D247	19	2731	66	–	–	1	–	–	–	–	–	–	–
27D3	55	4980	192	6	–	–	–	–	–	–	–	6	–
27D30	6	1493, 1499, 1507	15, 30, 97, 98, 99, 100	5	5	5	5	5	5	5	5	5	9
	31, 32	3380											
	33	3428											
	34	3505											
27D5			27	1	1	1	1	1	1	1	1	1	1
27D67	2	1039	7	2	2	–	2	–	2	2	2	2	–
27D76			105	–	–	–	–	2	–	–	–	–	2
27D98	39 to 45	4279	136, 167	18	18	18	22	18	18	18	18	18	18
27206	47	4406	171	1	1	–	1	1	1	1	1	1	1
27207	47	4418	172	1	1	–	1	1	1	1	1	1	1
27273			46	–	–	–	–	–	–	–	1	–	1
27471	4	1310	17, 30, 191, 192, 195, 197, 198	#	#	#	#	#	#	#	#	#	#
	6	1511											
	55	4966, 5000											
	56	5060, 5072											
	57	5110, 5122											
27506			191	–	–	–	–	–	–	–	–	1	–
27507			191	–	–	–	–	–	–	–	–	1	–
27508	55	4958	191	2	–	–	–	–	–	–	–	2	–
27513	55	4976	191	2	–	–	–	–	–	–	–	2	–
27568			46	–	–	–	–	–	–	–	1	–	1
27569			46	–	–	–	–	–	–	–	1	–	1
27570			46	–	–	–	–	–	–	–	1	–	1
27622	55	4960	191	2	–	–	–	–	–	–	–	2	–
27623	55	4964	191	2	–	–	–	–	–	–	–	2	–
27629	24	3000	75, 77	2	2	2	2	2	2	2	2	2	2
	25	3025											
27848			192	2	–	–	–	–	–	–	–	2	–
27849			192	1	–	–	–	–	–	–	–	1	–
27850			192	1	–	–	–	–	–	–	–	1	–
28D12	5	1424	27	3	3	3	3	3	3	3	3	3	3
28D14	38	3848	118	72	72	72	72	72	72	72	72	72	72
28D5	58	5162	198	–	–	–	18	1	–	1	–	–	1
28305	23	2925	73	1	1	1	1	1	1	1	1	1	1
28322			7	1	1	1	1	1	1	1	1	1	1
28778	34	3525	101, 102, 105	1	1	1	1	1	1	1	1	1	1
	35	3556											
	36	3620											
28842	31, 32	3374	97, 98, 99, 100	1	1	1	1	1	1	1	1	1	1
	33	3422											
	34	3499											
28843	30	3308	94, 97, 99, 100	1	1	1	1	1	1	1	1	1	1
	33	3416											
	34	3493											
28922			45, 86	@	@	@	@	@	@	@	@	@	@

Quantity varies. Refer to indicated page(s) for explanation.

AVIALOGS
WWW.AVIALOGS.COM

Part Number	Figure Number	Index Number	Page Number	Model R1820 -40	-40B	-54	-60	-65	-71	-73	-87	-95	-97
28922N3	9, 10	1785	45, 86	3	2	3	3	3	2	3	2	2	3
	27	3168, 3176											
	28	3168											
28950			190	2	–	–	–	–	–	–	–	2	–
28957	5	1378	25	3	3	3	3	3	3	3	3	3	3
29D10	27, 28	3124	84	2	2	2	2	2	2	2	2	2	2
29D11	46	3836	117	18	18	18	18	18	18	18	18	18	18
29D20			24	1	1	1	1	1	1	1	1	1	1
29087			73, 76, 78	3	3	3	3	3	3	3	3	3	2
29118	4	1324	18	1	1	1	1	–	1	–	1	1	–
29120	4	1322	18	1	1	1	1	–	1	–	1	1	–
29121			18	1	1	1	1	–	1	–	1	1	–
29124			18, 19	1	1	1	1	1	1	1	1	1	1
29250	16	2408	57	1	1	1	1	1	1	1	1	1	1
29288			15	1	1	1	1	1	1	1	1	1	1
29289			18	1	1	1	1	–	1	–	1	1	–
29291			15	1	1	1	1	1	1	1	1	1	1
29292	4	1268	15	1	1	1	1	–	1	–	1	1	–
± 29320	17, 18, 19	1262	15	1	1	1	1	1	1	1	1	1	1
29320Y2			15	AR	AR	AR	AR	AR	AR	AR	AR	AR	AR
29519	4	1316	18	1	1	1	1	–	1	–	1	1	–
29539	20	2810	67	1	1	1	1	1	1	1	1	1	1
29550			67	@	–	–	–	–	@	@	–	–	–
29730	2	3572	103	8	8	–	8	–	8	8	8	8	–
3D10			127, 134, 139, 143, 148, 153, 157	2	2	2	2	2	2	2	2	1	2
3D12			134	–	–	–	1	–	–	–	–	–	–
3D23	12	2220, 2228	48, 50	#	#	#	#	#	#	–	#	–	#
3D6	12	2222	48, 50	2	2	2	2	2	2	–	2	–	2
3D9	39	3980	129, 136	6	2	–	–	–	–	–	–	–	–
	40	4034											
3154-2	47	4422	172	1	1	–	1	1	1	1	1	1	1
34A39			93	AR	AR	AR	AR	AR	AR	AR	AR	AR	AR
34D110			167	18	18	18	18	18	18	18	18	16	18
34D114			167	18	18	18	18	18	18	18	18	16	18
34D123			65	1	–	–	–	–	–	–	–	1	–
34D131	3	1110	9	9	9	9	9	9	9	9	9	9	9
34D14	1	1049	8, 12, 17, 27, 28, 34, 45	53	53	53	53	53	53	53	53	53	53
	2	1053											
	4	1204, 1306											
	5	1432, 1440											
	8	1616											
	9, 10, 11	1801											
34D16	1, 2	1059	8	#	#	#	#	#	#	#	#	#	#
34D162	12	2219	48, 50	4	4	4	4	4	4	–	4	–	4
34D33	1	3517, 3612	9, 27, 28, 47, 65, 66, 75, 86, 87, 101, 105	42	42	44	42	44	42	42	42	42	44
	1, 2	1071											
	5	1418, 1450											
	9, 10, 11	1859											
	18	2693											
	19	2745											
	23	2974											
	27	3166, 3205, 3208											
	28	3190, 3205, 3208											
± 34D39	29, 30	3288	93	1	1	1	1	1	1	1	1	1	1
34D4	47, 48	4430	173	6	6	6	6	6	6	6	6	6	6
34D51	4	1233	12, 44, 45, 50, 61, 65, 86, 127, 129, 134, 136, 139, 143, 148, 153, 157, 166, 172	44	37	34	41	32	28	30	34	34	32
	9	1769, 1777, 1791											
	10	1769, 1791											
	11	1769											
	12	2223, 2229											

 # Quantity varies. Refer to indicated page(s) for explanation.

AVIATORS
WWW.AVIATORS.COM

Part Number	Figure Number	Index Number	Page Number	Model R1820									
				-40	-40B	-54	-60	-65	-71	-73	-87	-95	-97
	18	2546											
	19	2658											
	27	3174, 3186											
	28	3186											
	39	3984											
	40	4038											
	47	4412, 4416											
34D88	51	4716	183	10	10	10	10	10	10	10	10	10	10
34H39			93	AR	AR	AR	AR	AR	AR	AR	AR	AR	AR
34J39			93	AR	AR	AR	AR	AR	AR	AR	AR	AR	AR
35D32	15	2314	55	8	8	8	8	8	8	8	8	8	8
35D9			54	@	@	@	@	–	–	–	@	–	–
356–428	9, 10	1793	45, 127, 134, 139, 143,	42	42	44	42	42	42	42	42	41	42
	46	4342	148, 153, 157, 168										
356–524	51	4718	120, 183	46	46	36	46	46	46	46	46	46	46
356–624	5	1433, 1441	27, 28	12	12	12	12	12	12	12	12	12	12
36D7	1, 2	1025, 1035	7, 17, 45, 116	23	23	23	23	23	23	23	23	23	23
	4	1296											
	9, 10, 11	1815											
	38	3828											
37D100	11	1753	44	1	–	–	–	1	1	–	–	–	1
37D12	4	1326	18	1	1	1	1	–	1	–	1	1	–
37D26	4	1270	15	1	1	1	1	–	1	–	1	1	–
37D28	9, 11	1783	45	1	–	–	–	1	1	1	1	1	1
37D76	4	1318	18	1	1	1	1	–	1	–	1	1	–
37D99			179	–	–	–	–	–	–	–	18	–	–
375			164, 165	–	6	6	6	–	–	–	–	–	–
385-50-5	4	1160	9	1	1	1	1	1	1	1	1	1	1
392035-5			181	–	–	–	–	–	@	–	@	@	–
392058			182	1	–	–	–	–	–	–	–	–	–
392313	51	4700	181	–	1	–	–	–	1	–	1	1	–
392472			182	–	–	–	1	–	–	–	–	–	–
395093			182	–	–	1	–	–	–	–	–	–	–
395563-3			182	–	–	–	–	1	–	1	–	–	1
¢ 4015D102	8	1602	33	2	2	2	2	2	2	2	2	2	2
¢ 4015D2	38	3814	116	9	9	9	9	9	9	9	9	9	9
¢ 4015D3	1, 2	1008	5, 101, 105, 116	28	28	30	28	30	28	28	28	28	30
	34	3511											
	36	3602											
	38	3812											
¢ 4015D6	1, 2	1007	5	2	2	2	2	2	2	2	2	2	2
4015H102			33	AR	AR	AR	AR	AR	AR	AR	AR	AR	AR
4015H2			116	AR	AR	AR	AR	AR	AR	AR	AR	AR	AR
4015H3			5, 101, 105, 116	AR	AR	AR	AR	AR	AR	AR	AR	AR	AR
4015H6			5	AR	AR	AR	AR	AR	AR	AR	AR	AR	AR
4015J102			34	AR	AR	AR	AR	AR	AR	AR	AR	AR	AR
4015J2			116	AR	AR	AR	AR	AR	AR	AR	AR	AR	AR
4015J3			5, 101, 105, 116	AR	AR	AR	AR	AR	AR	AR	AR	AR	AR
4015J6			5	AR	AR	AR	AR	AR	AR	AR	AR	AR	AR
4015S102			33	AR	AR	AR	AR	AR	AR	AR	AR	AR	AR
4015S2			116	AR	AR	AR	AR	AR	AR	AR	AR	AR	AR
4015S3			5, 101, 105, 116	AR	AR	AR	AR	AR	AR	AR	AR	AR	AR
4015S6			5	AR	AR	AR	AR	AR	AR	AR	AR	AR	AR
¢ 4016D3	38	3810	116	9	9	9	9	9	9	9	9	9	9
4016H3			116	AR	AR	AR	AR	AR	AR	AR	AR	AR	AR
4016J3			116	AR	AR	AR	AR	AR	AR	AR	AR	AR	AR
4016S3			116	AR	AR	AR	AR	AR	AR	AR	AR	AR	AR
4019D2			48	6	–	–	–	–	–	–	–	–	–
4019D8			178	4	4	4	4	4	4	4	4	4	4
¢ 4028D2	38	3816	116	18	18	18	18	18	18	18	18	18	18
4028H2			116	AR	AR	AR	AR	AR	AR	AR	AR	AR	AR
4028J2			116	AR	AR	AR	AR	AR	AR	AR	AR	AR	AR
4028S2			116	AR	AR	AR	AR	AR	AR	AR	AR	AR	AR
4037D2			47	–	–	–	–	–	–	–	–	1	–
4037D3			47	–	–	–	–	–	–	–	–	1	–
4037D4	9, 10, 11	1847	47	2	2	2	2	2	2	2	2	–	2
4040D4	9	1775	44, 48, 50, 86, 134	16	8	12	13	14	10	10	10	6	14
	12	2224, 2230											
	27, 28	3172											
	27	3184											

Part Number	Figure Number	Index Number	Page Number	Model R1820 -40	-40B	-54	-60	-65	-71	-73	-87	-95	-97
4040D5	1, 2	1069	9, 27, 28, 32, 47, 65, 66, 86, 87, 129, 136, 140, 144, 154, 155, 159	53	53	59	55	53	55	53	55	53	5
	5	1416, 1456, 1488											
	7	1506											
	9, 10, 11	1853											
	18	2691											
	19	2743											
	27	3164, 3206											
	28	3188, 3206											
	39	3968, 3978											
	40	4022, 4032											
	41	4072, 4082											
	42	4122, 4132											
	43	4172, 4182											
	44	4204, 4214											
	45	4243, 4253											
4040D6	4	1202, 1304	12, 17, 34, 183	38	38	38	38	38	38	38	38	38	38
	8	1614											
	51	4706											
4042D1	1, 2	1024	7, 11, 15, 17, 27, 85, 116, 186	#	#	#	#	#	#	#	#	#	#
	4	1182, 1290											
	5	1410											
	27, 28	3142											
	38	3826											
	52	4788											
410596	30	3306	94	1	1	–	1	–	–	–	1	1	–
410601			60	1	–	–	–	–	–	–	–	1	–
410725			18	–	–	–	–	1	–	1	–	–	1
410726			18	–	–	–	–	@	–	@	–	–	@
410727	4	1330	18	–	–	–	–	1	–	1	–	–	1
410740			193, 196	–	–	–	–	@	–	–	–	–	@
410741			193	@	–	–	–	–	–	@	–	–	–
410870	55	4968	191	1	–	–	–	–	–	–	–	1	–
410871			191	1	–	–	–	–	–	–	–	1	–
411004	18	2524	60	1	–	–	–	–	–	–	–	1	–
411038	23	2950	74	1	1	1	1	1	1	1	1	1	1
411227	5	1362	24	1	1	1	1	1	1	1	1	1	1
411263Y1			107	@	@	–	–	@	@	@	@	@	@
411413			190	2	–	–	–	–	–	–	–	2	–
411549	35	3564	102	1	1	–	1	–	1	1	1	1	–
411667	9	1743	44	1	–	–	–	1	1	1	1	1	1
411676			11	–	–	–	–	@	–	–	–	–	@
411703			54	@	–	–	–	–	–	–	–	@	–
411716	4	1298	17	1	1	1	1	1	1	1	1	1	1
411736			9	1	1	1	1	1	1	1	1	1	1
411775			3	@	–	–	–	–	–	–	–	@	–
411802			84	1	1	1	1	1	1	1	1	1	1
411811	4	1150	9	1	1	1	1	1	1	1	1	1	1
411836			168	–	–	–	–	–	@	@	–	–	–
411883	23	2958	75	1	1	1	1	1	1	1	1	1	1
411884			73	@	@	@	@	@	@	@	@	@	@
412064	18	2558	61	1	–	–	–	–	–	–	–	1	–
412186	25	3029	75, 77	–	–	–	–	2	–	–	–	–	#
412248			98	–	–	–	–	@	–	–	–	–	–
412286			166	@	@	–	@	–	@	–	@	@	–
412315	33	3400	98	–	–	–	–	1	–	–	–	–	1
412336	27, 28	3126	84	1	1	1	1	1	1	1	1	1	1
412363			23	1	–	–	–	1	–	–	–	1	–
412365			15	1	–	–	–	–	1	–	1	1	–
412366			13	@	–	–	–	–	@	–	@	@	–
412379			56	–	–	–	–	1	1	1	–	–	1
412381			56	@	–	–	–	–	–	–	–	@	–
412384			4	1	–	–	–	–	1	1	–	–	–
412523			194, 197	2	–	–	–	2	–	2	–	–	1
412553			81	1	1	1	1	1	1	1	1	1	1

 # Quantity varies. Refer to indicated page(s) for explanation.

AVIALOGS
WWW.AVIALOGS.COM

Part Number	Figure Number	Index Number	Page Number	Model R1820									
				-40	-40B	-54	-60	-65	-71	-73	-87	-95	-97
412554	27, 28	3100	81	1	1	1	1	1	1	1	1	1	1
412584	24	3004	76	2	2	–	2	–	2	2	2	2	–
412639			71	@	–	–	–	@	–	–	–	–	@
412664			100, 103	–	–	@	–	@	–	–	–	–	@
412666			183	1	–	–	–	1	–	1	–	–	–
412667			184	1	–	–	–	1	–	1	–	–	–
412668			185	1	–	–	–	1	–	1	–	–	–
412669			185	1	–	–	–	1	–	1	–	–	–
412670			185	1	–	–	–	1	–	1	–	–	–
412717	3	1100	9	1	1	1	1	1	1	1	1	1	1
412909			12	1	–	–	–	1	1	1	–	1	1
413047	27	3154	85	1	–	1	1	1	–	1	–	–	1
413209			96	@	–	–	–	–	–	–	–	–	–
413331	9, 10, 11	1703	41	1	1	1	1	1	1	1	1	1	1
413392	18	2679	65	1	–	–	–	–	–	–	–	1	–
413453	23	2900	73	1	1	1	1	1	1	1	1	1	1
413485			80	–	@	–	–	–	–	–	–	@	–
413523			120	@	–	–	–	–	–	–	–	@	–
413525			15	–	–	–	–	1	–	1	–	–	–
413526			13	–	–	–	–	@	–	@	–	–	1
413551			19	@	–	–	–	@	–	–	–	@	–
413638			183	–	–	–	–	1	–	–	–	–	1
413817	51	4710	183	1	1	1	1	–	1	1	1	1	–
413909			91	1	–	–	–	1	1	1	–	1	1
414007			92	1	–	–	–	1	1	1	–	1	1
414008			88	–	–	–	–	@	–	–	–	–	–
414021			41	1	–	–	–	1	1	1	1	1	1
414022			37	1	–	–	–	1	1	1	1	1	1
414023			37	1	–	–	–	1	1	1	1	1	1
414024			39	1	–	–	–	1	1	1	1	1	1
414027			41	–	–	–	–	–	–	–	–	1	–
414032			37	1	–	–	–	1	1	1	1	1	1
414109	9	1675	37	1	–	–	–	1	1	1	1	1	1
414111			35	1	–	–	–	1	1	1	1	1	1
414186	18	2518	60	1	–	–	–	–	–	–	–	1	–
414233			88	@	–	–	–	–	–	–	–	@	–
414327	39 to 45	4275	166	9	9	9	9	9	9	9	9	8	9
414334	39, 45	4276	166	1	–	–	–	–	–	–	–	1	–
414348	21, 22	2860	71	1	1	1	1	1	1	1	1	1	1
414350			80	@	–	@	@	@	–	@	–	–	@
414353			85	1	–	–	1	1	–	1	–	–	1
414354	52	4764	185	–	–	–	–	1	–	–	1	–	1
414355	52	4766	185	–	–	–	–	2	–	–	2	–	2
414391			96	–	–	–	–	–	–	–	–	@	–
414446			188	@	–	–	–	–	–	–	–	–	–
414447			189	@	–	–	–	–	–	–	–	–	–
414486			188	–	–	–	–	–	–	–	–	@	–
414487			189	–	–	–	–	–	–	–	–	@	–
414519			80	–	1	1	–	–	1	–	1	1	–
414565N1			115	–	–	–	–	–	@	@	–	–	–
414565N2	38	3800	115	9	9	9	9	9	9	9	9	9	9
414694			81	–	–	–	–	–	1	–	–	–	–
414997	15	2306	54	1	1	1	1	1	1	1	1	1	1
415006	16	2402	57	1	1	1	1	–	–	–	1	–	–
415009			62	1	1	1	1	–	–	–	1	–	–
415012	19	2622	62	1	1	1	1	–	–	–	1	–	–
415023	19	2606	62	1	1	1	1	–	–	–	1	–	–
415201			126,133, 139, 142, 147, 152, 157, 160, 163	9	8	9	7	9	9	9	9	6	9
415248			96	1	–	–	1	–	–	1	–	–	–
415249	31, 32	3350	96	–	1	–	–	–	1	–	1	1	–
415258			57	1	–	–	–	–	–	–	–	1	–
415269	19	2638	64	1	1	1	1	–	–	–	1	–	–
415318	11	1735	44	2	–	–	–	2	2	–	–	–	2
415386	19	2739	66	1	1	1	1	–	–	–	1	–	–
415480			23	1	1	–	1	1	1	–	1	–	1
415485			21	@	@	–	@	@	@	–	@	–	@
415579	37	3708	111	–	–	8	8	–	8	–	–	–	8
415776			4	1	1	–	1	1	1	–	1	1	1
415779			3	@	@	–	@	–	@	–	@	@	–

AVIALOGS
WWW.AVIALOGS.COM

Part Number	Figure Number	Index Number	Page Number	Model R1820									
				-40	-40B	-54	-60	-65	-71	-73	-87	-95	-97
415798			4	–	–	–	–	–	–	–	–	–	@
415831			65	@	@	@	@	–	–	–	@	–	–
415843			23	1	–	–	–	1	–	1	1	1	1
415844			20	@	–	–	–	@	–	@	@	@	@
415866			88	–	–	@	–	@	@	–	–	–	@
415868			88	–	–	–	–	@	@	@	–	–	@
415921N1	39	3954	126, 131, 133, 138, 142, 146, 152, 157	6	4	1	1	3	6	4	6	5	3
	40	4000											
	41	4060											
	42	4104											
	43	4150											
	44	4190											
	45	4225											
415921N10	41	4062	138	–	–	1	–	–	–	–	–	–	–
415921N11	41	4050	138	–	–	1	–	–	–	–	–	–	–
415921N3	39	3952	126, 131, 132, 138, 142, 146, 152, 157	2	2	1	1	1	3	1	2	1	1
	40	4004											
	41	4054											
	42	4102											
	43	4154											
	44	4192											
	45	4229											
415921N4	41	4052	138	–	–	1	–	–	–	–	–	–	–
415921N5	42	4108	142	–	–	–	–	1	–	–	–	–	1
415921N7	40	4006	131	–	–	–	1	–	–	–	–	–	–
415921N8	40	4002	131	–	–	–	2	–	–	–	–	–	–
415921N9	40	4012	133, 138	–	–	1	1	–	–	–	–	–	–
	41	4058											
415922N1	39	3958	126, 132, 146, 152, 157	1	–	–	1	–	1	–	1	1	–
	40	4010											
	43	4156											
	44	4194											
415934	19	2630	64	1	1	1	1	–	–	–	1	–	–
416008			120	@	–	–	–	–	–	–	–	–	–
416009			121	@	–	–	–	–	–	–	–	@	–
416041			3	–	–	–	–	–	–	@	–	–	–
416110			89	@	@	–	@	–	–	–	@	@	–
416116			89	@	–	–	–	–	–	–	–	@	–
416186	8	1604	34	1	–	–	–	1	1	1	1	1	1
416211			160	–	@	–	–	–	–	–	–	–	–
416212			161	–	2	–	–	–	–	–	–	–	–
416213			160	–	2	–	–	–	–	–	–	–	–
416214			164	–	@	–	–	–	–	–	–	–	–
416215	40	4259	165	–	2	–	–	–	–	–	–	–	–
416216			164	–	2	–	–	–	–	–	–	–	–
416217			164	–	2	–	–	–	–	–	–	–	–
416218			161	–	2	–	–	–	–	–	–	–	–
416219			161	–	2	–	–	–	–	–	–	–	–
416220			161, 162	–	4	4	4	–	–	–	–	–	–
416221			165	–	2	2	2	–	–	–	–	–	–
416222			160, 163	–	2	2	2	–	–	–	–	–	–
416223	38	3914	120	–	2	2	2	–	–	–	–	–	–
416224			161, 162	–	2	2	2	–	–	–	–	–	–
416375			3	–	–	–	–	@	–	–	–	–	@
416452	4	1225	12	1	1	1	1	–	1	–	1	1	–
416453	46	4300	168	18	18	18	18	18	18	18	18	18	18
416482			121	@	@	@	@	@	@	@	@	@	@
416526			35	1	–	–	–	–	–	–	–	–	–
416606			76	–	–	2	–	–	–	–	–	–	–
416623	11	1745	44	1	–	–	–	1	1	–	–	–	1
416624			41	1	–	–	–	–	–	–	–	–	–
416625			37	1	–	–	–	–	–	–	–	–	–
416626			34	1	–	–	–	–	–	–	–	–	–
416627			39	1	1	1	1	1	1	–	1	–	1
416628			37	1	–	–	–	–	–	–	–	–	–
416629			37	1	–	–	–	–	–	–	–	–	–
416630	11	1737	44	1	–	–	–	1	1	–	–	–	1
416631			37	1	–	–	–	–	–	–	–	–	–

AVIALOGS
WWW.AVIALOGS.COM

Part Number	Figure Number	Index Number	Page Number	Model R1820 -40	-40B	-54	-60	-65	-71	-73	-87	-95	-97
417217			189	–	–	–	–	–	–	–	–	1	–
417308N1	42	4112	142, 147	–	–	–	–	1	1	1	–	–	1
	43	4162											
417309N1	39	3956	126, 132, 157	1	1	–	–	–	–	–	–	1	–
	40	4008											
	45	4231											
417310N1	39	3950	126	2	–	–	–	–	–	–	–	–	–
417311N2	45	4227	157	–	–	–	–	–	–	–	–	1	–
417312N1	42	4110	142, 147	–	–	–	–	1	1	1	–	–	1
	43	4160											
417313N1	42	4100	142, 146	–	–	–	–	1	1	1	–	–	1
	43	4152											
417314N1	41	4056	138, 142, 146	–	–	1	–	1	1	1	–	–	1
	42	4106											
	43	4158											
417317N1	45	4233	157	–	–	–	–	–	–	–	–	1	–
417436	56	5056	194, 197	2	–	–	2	2	–	2	–	–	1
	57	5106											
417437	55	4950	190	2	–	–	–	–	–	–	–	2	–
417438	56	5050	194	2	–	–	2	–	–	2	–	–	–
417439	57	5100	194, 197	–	–	–	–	2	–	–	–	–	1
417441	55	4954	190	2	–	–	–	–	–	–	–	2	–
417494			37	1	–	–	–	–	–	–	–	–	–
417514			13	@	@	@	@	–	@	–	@	@	–
417515			14	–	–	–	–	@	–	–	–	–	@
417518			15	1	1	1	1	–	1	–	1	1	–
417519			15	–	–	–	–	1	–	1	–	–	1
417520			189	1	–	–	–	–	–	–	–	–	–
417531			189	1	–	–	–	–	–	–	–	–	–
417576	9	1725	43	1	–	–	–	1	1	1	1	1	1
417577	9, 10	1719	43	2	1	1	1	2	2	2	2	2	2
	9, 11	1729											
417625	8	1606	34	1	1	1	1	1	1	–	1	–	1
417627			41	1	1	1	1	1	1	–	1	–	1
417628			37	1	1	1	1	1	1	–	1	–	1
417651	10, 11	1677	37	1	1	1	1	1	1	–	1	–	1
417652			189	–	–	–	–	–	–	–	–	1	–
417660			37	1	1	1	1	1	1	–	1	–	1
417661			37	1	1	1	1	1	1	–	1	–	1
417696			36	1	1	1	1	–	–	–	1	–	–
417719			48, 50	@	@	@	@	@	@	–	@	–	@
417751	9, 10	1717	41, 43	2	1	1	1	2	2	1	1	1	2
	11	1727											
417836			37	–	–	–	–	1	1	–	–	–	1
417860			36	–	–	1	1	–	1	–	1	–	1
417868			50	@	@	@	@	@	@	–	@	–	@
417885			91	1	1	1	1	1	1	1	1	1	1
417887			92	1	1	1	1	1	1	1	1	1	1
417937N2			117	9	9	9	9	9	9	9	9	9	9
417947	52	4750	184	–	–	–	–	1	–	–	1	–	1
417948	52	4752	185	–	–	–	–	1	–	–	1	–	1
417968	52	4758	185	–	–	–	–	1	–	–	1	–	1
417969	52	4754	185	–	–	–	–	1	–	–	1	–	1
417984	52	4756	185	–	–	–	–	1	–	–	1	–	1
418094N1			126, 147, 152	@	–	–	–	–	@	–	@	–	–
418094N12			138	–	–	1	–	–	–	–	–	–	–
418094N15			131	–	–	–	@	–	–	–	–	–	–
418094N16			131	–	–	–	@	–	–	–	–	–	–
418094N17			133, 138	–	–	@	@	–	–	–	–	–	–
418094N2			126, 133, 138, 147, 152	@	–	@	@	–	@	–	@	–	–
418094N3			126, 132, 138, 147, 152	2	–	3	1	–	2	–	2	–	–
418202N1			126, 132, 152	@	–	–	@	–	–	–	@	–	–
418203N2			117	@	@	@	@	@	@	@	@	@	@
418278			43	–	–	–	–	–	–	–	–	1	–
418282			43	–	–	–	–	–	–	–	–	1	–
418603			88	–	–	–	–	–	@	–	–	–	@
418607			89	–	–	–	@	–	–	–	@	–	–
418622			35	–	–	–	–	–	–	–	–	1	–
418951			35	–	–	–	–	–	–	–	@	–	–
418953			36	–	–	–	–	–	–	–	–	–	@

AVIALOGS
WWW.AVIALOGS.COM

Part Number	Figure Number	Index Number	Page Number	Model R1820									
				-40	-40B	-54	-60	-65	-71	-73	-87	-95	-97
420034	54	4870	187	–	–	–	1	–	–	–	–	–	–
420035	54	4872	188	–	–	–	1	–	–	–	–	–	–
420046			107	@	–	@	@	–	@	–	@	–	@
420105	6	1475	29	–	–	–	–	–	–	–	–	–	1
420106	6	1477	29	–	–	–	–	–	–	–	–	–	1
420118N1			142	–	–	–	–	–	–	–	–	–	1
420144			4	1	–	1	1	–	–	–	–	–	1
420145			4	–	–	@	–	–	–	–	–	–	@
420146			4	@	–	–	@	–	@	–	@	–	–
420160			23	1	1	1	1	–	1	–	1	–	1
420161			22	@	–	@	@	–	@	–	@	–	@
420235			134	–	–	–	1	–	–	–	–	–	–
420286	7	1550	32	–	–	1	1	–	1	–	1	–	1
420287	7	1552	32	–	–	1	1	–	1	–	1	–	1
420368	40, 41	4257	164	–	2	2	2	–	–	–	–	–	–
420470	19	2600	62	–	–	1	1	–	–	–	–	–	–
420488			108	–	–	–	–	–	–	–	–	–	1
420584	41	4261	165	–	–	2	2	–	–	–	–	–	–
420586N1	40, 41	4255	162	–	2	2	2	–	–	–	–	–	–
420592			77	–	–	–	–	–	–	–	–	–	1
420684			162	–	2	2	2	–	–	–	–	–	–
420699			127, 134, 139, 142, 147, 153, 157	2	2	4	2	2	2	2	2	1	2
420702			53	1	1	1	1	–	–	–	1	–	–
420702N2			53	–	–	@	@	–	–	–	–	–	–
420704	14	2275	53	1	1	1	1	–	–	–	1	–	–
420705			53	1	1	1	1	–	–	–	1	–	–
420714			121	–	–	–	–	–	–	–	–	–	@
420750			31	–	–	–	1	–	–	–	–	–	–
420780	34	3475	99	–	–	1	–	–	–	–	–	–	–
420921			79	1	1	1	1	1	1	1	1	1	1
420967			23	–	–	–	–	1	1	1	–	–	1
421016			164	–	2	2	2	–	–	–	–	–	–
421053	4	1332	18	–	–	–	–	1	–	1	–	–	1
421075			121	–	–	–	–	–	–	–	–	–	@
421111	53	4825	186	–	–	1	–	–	–	–	–	–	–
421112	53	4827	186	–	–	1	–	–	–	–	–	–	–
421152	34	3507	100, 103	–	–	1	–	1	–	–	–	–	1
	36	3600											
421393			89	–	–	@	–	–	@	–	–	–	@
421403			90	–	–	–	@	–	–	–	@	–	–
421407	8	1600	33	1	1	1	1	1	1	1	1	1	1
421567	5	1360	22	1	1	1	1	–	–	–	1	1	–
421568			22	–	–	–	–	1	1	1	–	–	1
421633			14	–	–	–	–	1	–	1	–	–	1
421634	4	1260	14	1	1	1	1	–	1	–	1	1	–
421645N2			117	9	9	9	9	9	9	9	9	9	9
421661			99	–	–	1	–	–	–	–	–	–	–
421709N1			4	1	1	1	1	1	1	1	1	1	1
421710	1	1001	4	–	–	1	–	1	–	–	–	–	1
421711	2	1003	4	1	1	–	1	–	1	1	1	1	–
421775			81	1	–	1	1	1	–	1	–	–	1
421899	29	3250	90	–	–	1	–	1	1	1	–	–	1
421901	30	3252	91	1	1	–	1	–	–	–	1	1	–
421903	12	2216	48, 50	1	1	1	1	1	1	–	1	–	1
423036			121	9	9	9	9	9	9	9	9	9	9
423190			35	–	–	1	–	–	–	–	–	–	–
423222	37	3700	108	1	1	1	1	1	1	1	1	1	1
423269			111	–	–	–	8	–	8	–	–	–	8
44056			192	1	–	–	–	–	–	–	–	1	–
44057			192	1	–	–	–	–	–	–	–	1	–
45D1	38	3908	120	27	27	27	27	27	27	27	27	27	27
45D21			101, 105	–	–	2	–	–	–	–	–	–	2
45D29	39	3974	129, 136, 140, 144, 150, 155, 159	8	8	#	6	8	8	8	8	8	8
	40	4028											
	41	4078											
	42	4128											
	43	4178											
	44	4210											
	45	4249											

 # Quantity varies. Refer to indicated page(s) for explanation.

AVIALOGS
WWW.AVIALOGS.COM

Part Number	Figure Number	Index Number	Page Number	Model R1820 -40	-40B	-54	-60	-65	-71	-73	-87	-95	-97
45D3	1	3515, 3610	101, 105	–	–	2	–	2	–	–	–	–	2
45D33			136, 140	–	2	2	2	–	–	–	–	–	–
45286	4	1328	18	1	1	1	1	–	1	–	1	1	–
45439			18	1	1	1	1	–	1	–	1	1	–
46D13			117	18	–	–	–	18	18	18	18	18	–
46484	23	2929	73	1	1	1	1	1	1	1	1	1	1
47D19	19	2616	62	4	4	4	4	–	–	–	4	–	–
48672			111	8	8	8	8	8	8	8	8	8	8
49021			190	@	–	–	–	–	–	–	–	@	–
49206			117	@	–	–	–	@	@	@	@	@	–
49207			117	@	–	–	–	@	@	@	@	@	–
49215	59	5175	199	9	–	–	9	–	–	–	–	–	–
49256			199	9	–	–	9	–	–	–	–	–	–
49718			60	@	–	–	–	–	–	–	–	@	–
5D39			46, 54	1	1	1	1	–	–	–	2	–	1
5D9			18	–	–	–	–	2	–	2	–	–	2
5S5			179	18	–	18	–	–	–	–	–	–	–
± 5015D3	34	3533	101, 103, 106	6	6	6	6	6	6	6	6	6	6
	35	3578											
	36	3642											
5015H3			101, 103, 106	AR	AR	AR	AR	AR	AR	AR	AR	AR	AR
5015S3			101, 103, 106	AR	AR	AR	AR	AR	AR	AR	AR	AR	AR
5037D6	4	1172	11	1	1	1	1	1	1	1	1	1	1
55D19			71	12	–	–	–	12	12	12	12	12	12
55D8			167	18	18	18	18	18	18	18	18	16	18
56D10	4	1168	11	8	8	8	8	8	8	8	8	8	8
56D3	16	2422	57	5	5	5	5	5	5	5	5	5	5
56D6	5	1376	25	3	3	3	3	3	3	3	3	3	3
57D1	34	3528	27, 28, 32, 87, 101, 102, 105, 106, 136, 173	12	12	14	18	32	14	12	14	12	34
	35	3559											
	36	3623											
	47, 48	4432											
57D11	55	4982	192	6	–	–	–	–	–	–	–	6	–
57D3	18	2545	61, 65	6	6	6	6	–	–	–	6	6	–
	19	2660											
58D1	9, 10, 11	1803	45	1	1	1	1	1	1	1	1	1	1
58D2	36	3637	106	–	–	–	–	20	–	–	–	–	20
58D3	3	1112	9, 56, 93	14	14	14	14	14	14	14	14	14	14
	15	2326											
58D8	36	3629	105	–	–	–	–	24	–	–	–	–	24
59D3	55	4962	94, 191	3	1	1	1	1	1	1	1	3	1
59D5	35	3563	102, 118	24	24	18	24	18	24	24	24	24	18
	46	3857											
59D9			93	2	–	–	–	2	2	2	–	2	2
6D44			161, 162	–	4	–	–	–	–	–	–	–	–
6D9			136	–	–	–	4	–	–	–	–	–	–
61031			57	@	–	–	–	@	–	–	–	–	–
61235	16	2404	57	1	1	1	1	1	1	1	1	1	1
61459			198	–	–	–	9	1	–	1	–	–	1
61618			192	2	–	–	–	–	–	–	–	2	–
61639	18	2516	60	1	–	–	–	–	–	–	–	1	–
61722			179	@	@	–	@	@	@	@	@	@	@
61726	4	1320	18	1	1	1	1	–	1	–	1	1	–
61853			61	@	–	–	–	–	–	–	–	@	–
61951	23	2960	75	1	1	1	1	1	1	1	1	1	1
61957	23	2962	75	1	1	1	1	1	1	1	1	1	1
61990	9, 10, 11	1845	46	1	1	1	1	1	1	1	1	1	1
62024			47	@	@	@	@	@	@	@	@	@	@
62025			73	1	1	1	1	1	1	1	1	1	1
62220			73	1	1	1	1	1	1	1	1	1	1
62336	20	2804	67	1	1	1	1	1	1	1	1	1	1
62338	20	2808	67	10	10	10	10	10	10	10	10	10	10
62343	18	2502	58	1	–	–	–	–	–	–	–	1	–
62346			60	@	–	–	–	–	–	–	–	@	–
62347	18	2500	58	1	–	–	–	–	–	–	–	1	–
¢ 62497			115	18	18	18	18	18	18	18	18	18	18
62497Y3			116	AR	AR	AR	AR	AR	AR	AR	AR	AR	AR
62497Y4			116	AR	AR	AR	AR	AR	AR	AR	AR	AR	AR

AVIALOGS
WWW.AVIALOGS.COM

Part Number	Figure Number	Index Number	Page Number	Model R1820 -40	-40B	-54	-60	-65	-71	-73	-87	-95	-97
62497Y5			116	AR	AR	AR	AR	AR	AR	AR	AR	AR	AR
62773	46	3840	117	18	18	18	18	18	18	18	18	18	18
62808	49	4516	172, 176	#	#	#	#	#	#	#	#	#	#
62862	16	2416	57	1	1	1	1	1	1	1	1	1	1
62864	16	2414	57	1	1	1	1	1	1	1	1	1	1
63D36			178	4	4	–	4	4	–	–	4	–	–
± 63276	18	2560	61, 64	1	1	1	1	–	–	–	1	1	–
	19	2640											
63276Y20			61, 64	AR	AR	AR	AR	–	–	–	AR	AR	–
63481			60	1	–	–	–	–	–	–	–	1	–
63482	18	2526	61	1	–	–	–	–	–	–	–	1	–
63483	18	2528	61	1	–	–	–	–	–	–	–	1	–
63612			61, 64	@	@	–	–	–	–	–	@	@	–
± 63630	36	3646	101, 103, 106	3	3	3	3	3	3	3	3	3	3
63630Y1			101, 103, 106	AR	AR	AR	AR	AR	AR	AR	AR	AR	AR
63630Y10			101, 103, 106	AR	AR	AR	AR	AR	AR	AR	AR	AR	AR
63630Y20			101, 103, 106	AR	AR	AR	AR	AR	AR	AR	AR	AR	AR
63630Y30			101, 103, 106	AR	AR	AR	AR	AR	AR	AR	AR	AR	AR
63630Y40			101, 103, 106	AR	AR	AR	AR	AR	AR	AR	AR	AR	AR
63669			18	–	–	–	–	1	–	1	–	–	1
63743	46	3868	118	18	18	18	18	18	18	18	18	18	18
63744	46	3870	118	18	18	18	18	18	18	18	18	18	18
± 63747	38	3804	115	9	9	9	9	9	9	9	9	9	9
63747Y10			115	AR	AR	AR	AR	AR	AR	AR	AR	AR	AR
63747Y11			115	AR	AR	AR	AR	AR	AR	AR	AR	AR	AR
63747Y12			115	AR	AR	AR	AR	AR	AR	AR	AR	AR	AR
63747Y2			115	AR	AR	AR	AR	AR	AR	AR	AR	AR	AR
63747Y3			115	AR	AR	AR	AR	AR	AR	AR	AR	AR	AR
63747Y4			115	AR	AR	AR	AR	AR	AR	AR	AR	AR	AR
63747Y5			115	AR	AR	AR	AR	AR	AR	AR	AR	AR	AR
63747Y6			115	AR	AR	AR	AR	AR	AR	AR	AR	AR	AR
63747Y7			115	AR	AR	AR	AR	AR	AR	AR	AR	AR	AR
63747Y8			115	AR	AR	AR	AR	AR	AR	AR	AR	AR	AR
63747Y9			115	AR	AR	AR	AR	AR	AR	AR	AR	AR	AR
63837	19	2634	64	10	10	10	10	–	–	–	10	–	–
63867	1, 2	1067	9	1	1	1	1	1	1	1	1	1	1
63996			7	@	@	–	@	@	@	@	@	@	@
63997	1, 2	1043	8	1	1	1	1	1	1	1	1	1	1
63998	1, 2	1045	8	1	1	1	1	1	1	1	1	1	1
64029	27, 28	3148	85	1	1	1	1	1	1	1	1	1	1
64031			85	–	–	–	–	–	1	–	–	–	–
± 64050	27, 28	3104, 3128	81, 84	2	2	2	2	2	2	2	2	2	2
64050Y1			81, 84	AR	AR	AR	AR	AR	AR	AR	AR	AR	AR
64050Y2			81, 84	AR	AR	AR	AR	AR	AR	AR	AR	AR	AR
64050Y3			81, 84	AR	AR	AR	AR	AR	AR	AR	AR	AR	AR
64050Y6			81, 84	AR	AR	AR	AR	AR	AR	AR	AR	AR	AR
± 64051	27, 28	3130	84	1	1	1	1	1	1	1	1	1	1
64051Y1			84	AR	AR	AR	AR	AR	AR	AR	AR	AR	AR
64051Y2			84	AR	AR	AR	AR	AR	AR	AR	AR	AR	AR
64051Y3			84	AR	AR	AR	AR	AR	AR	AR	AR	AR	AR
64051Y6			84	AR	AR	AR	AR	AR	AR	AR	AR	AR	AR
± 64053	27, 28	3106	81	1	1	1	1	1	1	1	1	1	1
64053Y1			81	AR	AR	AR	AR	AR	AR	AR	AR	AR	AR
64053Y2			81	AR	AR	AR	AR	AR	AR	AR	AR	AR	AR
64053Y3			81	AR	AR	AR	AR	AR	AR	AR	AR	AR	AR
64053Y6			81	AR	AR	AR	AR	AR	AR	AR	AR	AR	AR
64075	35	3570	102	8	8	–	8	–	8	8	8	8	–
64080			57	1	–	–	–	–	–	–	–	1	–
± 64120	27, 28	3108	81	1	1	1	1	1	1	1	1	1	1
64120Y1			81	AR	AR	AR	AR	AR	AR	AR	AR	AR	AR
64120Y2			81	AR	AR	AR	AR	AR	AR	AR	AR	AR	AR
64120Y3			81	AR	AR	AR	AR	AR	AR	AR	AR	AR	AR
64120Y6			82	AR	AR	AR	AR	AR	AR	AR	AR	AR	AR
64130	27, 28	3162, 3182	86	1	1	1	1	1	1	1	1	1	1
64222			168	36	36	36	36	36	36	36	36	36	36
64255			183	1	1	1	1	1	1	1	1	1	1
64280	9, 10, 11	1699	41, 182	3	3	4	4	4	4	4	3	3	4
	51	4702											

 # Quantity varies. Refer to indicated page(s) for explanation.

AVIALOGS.COM
WWW.AVIALOGS.COM

Part Number	Figure Number	Index Number	Page Number	Model R1820 -40	-40B	-54	-60	-65	-71	-73	-87	-95	-97
64325			76	–	–	2	–	–	–	–	–	–	–
≠ 64425	27, 28	3102	81	1	1	1	1	1	1	1	1	1	1
64425Y1			81	AR	AR	AR	AR	AR	AR	AR	AR	AR	AR
64425Y2			81	AR	AR	AR	AR	AR	AR	AR	AR	AR	AR
64425Y3			81	AR	AR	AR	AR	AR	AR	AR	AR	AR	AR
64425Y6			81	AR	AR	AR	AR	AR	AR	AR	AR	AR	AR
64560			4	1	1	1	1	1	1	1	1	1	1
64602			28	@	@	@	@	@	@	@	@	@	@
64602N2	5	1442	28	1	1	1	1	1	1	1	1	1	1
64603	5	1446	28	1	1	1	1	1	1	1	1	1	1
64621	35	3566	102	1	1	–	1	–	1	1	1	1	–
64725			170	@	@	@	@	@	@	@	@	@	@
64730	46	4346	169	18	18	18	18	18	18	18	18	18	18
64731	46	4348	169	18	18	18	18	18	18	18	18	18	18
64814	26	1005	4	1	1	1	1	1	1	1	1	1	1
64815	26	3074	80	1	1	1	1	1	1	1	1	1	1
64850			7	1	1	1	1	1	1	1	1	1	1
≠ 64870	16	2412	57	8	8	8	8	8	8	8	8	8	8
64870Y1			57	AR	AR	AR	AR	AR	AR	AR	AR	AR	AR
64870Y10			57	AR	AR	AR	AR	AR	AR	AR	AR	AR	AR
64870Y11			57	AR	AR	AR	AR	AR	AR	AR	AR	AR	AR
64870Y12			57	AR	AR	AR	AR	AR	AR	AR	AR	AR	AR
64870Y2			57	AR	AR	AR	AR	AR	AR	AR	AR	AR	AR
64870Y20			57	AR	AR	AR	AR	AR	AR	AR	AR	AR	AR
64870Y21			57	AR	AR	AR	AR	AR	AR	AR	AR	AR	AR
64870Y22			57	AR	AR	AR	AR	AR	AR	AR	AR	AR	AR
64904			111	8	8	8	8	8	8	8	8	8	8
64952	18	2552	61	1	–	–	–	–	–	–	–	1	–
64962	46	4334	168	18	18	18	18	18	18	18	18	18	18
64987			61	1	–	–	–	–	–	–	–	1	–
64992	18	2510	60	2	–	–	–	–	–	–	–	2	–
64994	18	2550	61	2	–	–	–	–	–	–	–	2	–
65D15	23	2972	73, 75, 77, 85	24	24	24	24	24	24	24	24	24	24
	24	3002											
	25	3027											
	27, 28	3152											
65D18	26	3072	80	6	6	6	6	6	6	6	6	6	6
65062			185	#	–	–	–	#	–	#	#	–	#
651TE	8	1610	34	1	1	1	1	1	1	1	1	1	1
65125	18	2506	60	1	–	–	–	–	–	–	–	1	–
65161	16	2406	57	1	1	1	1	1	1	1	1	1	1
65285			190	2	–	–	–	–	–	–	–	2	–
65286			76	2	2	–	2	–	2	2	2	2	–
65290	35	3560	102	6	6	–	6	–	6	6	6	6	–
65396	59	5177	199	9	–	–	9	–	–	–	–	–	–
65461			185	10	–	–	–	#	–	10	12	–	12
65468	29, 30	3286	93	1	1	1	1	1	1	1	1	1	1
65656			117	9	–	–	–	9	9	9	9	9	–
65657			118	@	@	@	@	@	@	@	@	@	@
65668			117	9	–	–	–	9	9	9	9	9	–
65678	46	3850	118	18	18	18	18	18	18	18	18	18	18
65679	46	3856	118	18	18	18	18	18	18	18	18	18	18
65703			199	9	–	–	9	–	–	–	–	–	–
65843			117	9	9	9	9	9	9	9	9	9	9
65852	9, 10, 11	1831	46	1	1	1	1	1	1	1	1	1	1
65853			46	@	@	@	@	@	@	@	@	@	@
65855	9, 10, 11	1829	46	1	1	1	1	1	1	1	1	1	1
65857	9, 10, 11	1821	45	1	1	1	1	1	1	1	1	1	1
65858	9, 10, 11	1833	46	2	2	2	2	2	2	2	2	2	2
65923			127, 134, 139, 143, 147, 153, 157	2	2	4	2	2	2	2	2	1	2
65924			127, 134, 139, 143, 148, 153, 157	2	2	4	2	2	2	2	2	1	2
65965			17	@	@	@	–	–	@	–	@	@	@
66D19			127, 128, 134, 135, 139, 140, 142, 143, 144, 147, 148, 149, 153, 154, 157, 158, 160, 161, 163, 164, 167	#	#	#	#	#	#	#	#	#	#

 # Quantity varies. Refer to indicated page(s) for explanation.

Part Number	Figure Number	Index Number	Page Number	Model R1820 -40	-40B	-54	-60	-65	-71	-73	-87	-95	-97
66D25			127, 128, 134, 135, 139, 140, 148, 150, 153, 154	20	–	28	24	–	24	–	24	–	–
66D36			162, 164, 165	–	18	18	18	–	–	–	–	–	–
66D39			162, 163, 164, 165	–	106	112	112	–	–	–	–	–	–
66D41			162	–	2	–	–	–	–	–	–	–	–
66D45			162, 167	4	54	–	–	–	–	–	–	4	–
66D47			160, 163	–	4	4	4	–	–	–	–	–	–
66D52			120	–	6	6	6	–	–	–	–	–	–
66D53			161, 162	–	16	12	12	–	–	–	–	–	–
66D56			128, 135, 140, 144, 149, 154, 158, 161, 164, 165	16	22	24	22	16	16	16	16	16	16
66D60			128, 135, 140, 149, 154	32	–	32	24	–	32	–	32	–	–
66D61			127, 128, 134, 135, 139, 147, 149, 153	63	–	42	43	–	56	–	63	–	–
66109			93	@	@	–	@	–	–	–	@	@	–
66109N2	30	3296	93	1	1	–	1	–	–	–	1	1	–
66112	31, 32	3356	97, 99	1	1	1	1	1	1	1	1	1	1
	33	3406											
	34	3481											
66113			97	@	–	–	–	–	–	–	–	@	–
≠ 66116	35	3576	103	1	1	–	1	–	1	1	1	1	–
66116Y1			103	AR	AR	–	AR	–	AR	AR	AR	AR	–
66131	57	5120	195, 198	2	–	–	2	2	–	2	–	–	1
66185	9, 10, 11	1693	41	4	4	4	4	4	4	4	4	4	4
66186	9, 10, 11	1695	41	1	1	1	1	1	1	1	1	1	1
66189N2			41	1	1	1	1	1	1	1	1	1	1
66201	27, 28	3192	87	1	1	1	1	1	1	1	1	1	1
66235	28	3180	86	–	1	1	–	–	1	–	1	1	–
66251	33	3420	97, 99, 100	–	–	1	–	1	1	1	–	–	1
	34	3497											
66259			60	1	–	–	–	–	–	–	–	1	–
66260	18	2520	60	1	–	–	–	–	–	–	–	1	–
66262	18	2532	61	5	–	–	–	–	–	–	–	5	–
66263	18	2534	61	5	–	–	–	–	–	–	–	5	–
66264	18	2538	61	1	–	–	–	–	–	–	–	1	–
66266	18	2508	60	3	–	–	–	–	–	–	–	3	–
66267			61	@	–	–	–	–	–	–	–	–	–
66301			94	1	1	–	1	–	–	–	1	1	–
66326			68	–	–	–	–	@	–	–	–	@	–
66327	20	2826	70	1	1	1	1	1	1	1	1	1	1
66328			70	@	–	–	–	@	–	–	–	@	–
66329			71	@	@	–	@	@	@	@	@	@	@
66368			61	1	–	–	–	–	–	–	–	1	–
66372	5	1375	25	1	1	1	1	1	1	1	1	1	1
66373	16	2418	57	1	1	1	1	1	1	1	1	1	1
≠ 66374	16	2424	57	1	1	1	1	1	1	1	1	1	1
66374Y10			57	AR	AR	AR	AR	AR	AR	AR	AR	AR	AR
≠ 66375	5	1372	24	1	1	1	1	1	1	1	1	1	1
66375Y1			24	AR	AR	AR	AR	AR	AR	AR	AR	AR	AR
66375Y10			24	AR	AR	AR	AR	AR	AR	AR	AR	AR	AR
66375Y11			24	AR	AR	AR	AR	AR	AR	AR	AR	AR	AR
66375Y12			24	AR	AR	AR	AR	AR	AR	AR	AR	AR	AR
66375Y13			24	AR	AR	AR	AR	AR	AR	AR	AR	AR	AR
66375Y2			24	AR	AR	AR	AR	AR	AR	AR	AR	AR	AR
66375Y3			24	AR	AR	AR	AR	AR	AR	AR	AR	AR	AR
66376	20	2824	69	1	1	1	1	1	1	1	1	1	1
66377			68	@	–	–	–	–	–	–	–	–	–
66383	18	2681	65	1	–	–	–	–	–	–	–	1	–
66384	18	2687	65, 66	1	1	1	1	–	–	–	1	1	–
	19	2737											
66386	18	2689	28, 65, 66	1	1	1	1	1	1	1	1	1	1
	19	2741											
66413			85	–	–	–	–	–	1	–	–	–	–
≠ 66414	27, 28	3132	84	2	2	2	2	2	2	2	2	2	2
66414Y1			84	AR	AR	AR	AR	AR	AR	AR	AR	AR	AR
66414Y2			84	AR	AR	AR	AR	AR	AR	AR	AR	AR	AR
66414Y3			84	AR	AR	AR	AR	AR	AR	AR	AR	AR	AR
66414Y6			84	AR	AR	AR	AR	AR	AR	AR	AR	AR	AR
66449	9, 10, 11	1697	41	1	1	1	1	1	1	1	1	1	1
66450	9, 10, 11	1835	46	1	–	1	1	1	1	1	1	1	1

AVIALOGS
WWW.AVIALOGS.COM

Part Number	Figure Number	Index Number	Page Number	Model R1820 -40	-40B	-54	-60	-65	-71	-73	-87	-95	-97
66451	9, 10, 11	1841	46	1	1	1	1	1	1	1	1	1	1
66453	9, 10, 11	1837	46	1	–	1	1	1	1	1	1	1	1
66636	36	3608	105	–	–	–	–	1	–	–	–	–	1
66677			27	@	@	@	@	@	@	@	@	@	@
66681			28	–	–	–	–	@	@	@	–	–	@
66681N2			28	–	–	–	–	1	1	1	–	–	1
66682	17	2460	58	–	–	–	–	1	1	1	–	–	1
± 66724	5	1364	24	1	1	1	1	1	1	1	1	1	1
66724Y2			24	AR	AR	AR	AR	AR	AR	AR	AR	AR	AR
66733			105	–	–	–	–	@	–	–	–	–	@
66756			99	–	–	–	–	1	–	–	–	–	–
66757	36	3606	105	–	–	–	–	1	–	–	–	–	1
66779	9, 10, 11	1849	47	2	2	2	2	2	2	2	2	2	2
66816			172	@	@	–	–	@	@	@	–	–	@
67029	31, 32	3366	97	1	1	–	1	–	–	–	1	1	–
67030			94	1	1	–	1	–	–	–	1	1	–
67073			94	1	1	–	1	–	–	–	1	1	–
67167			18	–	–	–	–	1	–	1	–	–	1
67168			18	–	–	–	–	1	–	1	–	–	1
67169			18	–	–	–	–	1	–	1	–	–	1
67170			18	–	–	–	–	1	–	1	–	–	1
67171			18	–	–	–	–	1	–	1	–	–	1
67172			18	–	–	–	–	1	–	1	–	–	1
67173			18	–	–	–	–	1	–	1	–	–	1
67174			18	–	–	–	–	1	–	1	–	–	1
67239			19	–	–	–	–	1	–	1	–	–	1
± 67297			108	1	1	–	–	1	1	1	1	1	1
67297Y1			108	AR	AR	–	–	AR	AR	AR	AR	AR	AR
67297Y15			108	AR	AR	–	–	AR	AR	AR	AR	AR	AR
67297Y16			108	AR	AR	–	–	AR	AR	AR	AR	AR	AR
67297Y17			108	AR	AR	–	–	AR	AR	AR	AR	AR	AR
67297Y18			108	AR	AR	–	–	AR	AR	AR	AR	AR	AR
67297Y2			108	AR	AR	–	–	AR	AR	AR	AR	AR	AR
67297Y3			108	AR	AR	–	–	AR	AR	AR	AR	AR	AR
67302	37	3724	113	1	1	1	1	1	1	1	1	1	1
67311	31	3376	97	1	1	–	1	–	–	–	1	1	–
67316	4	1170	11	5	5	5	5	5	5	5	5	5	5
67366			95	@	@	@	@	@	@	@	@	@	@
67367			92	@	–	–	–	@	–	–	–	@	–
67369	20	2802	67	1	1	1	1	1	1	1	1	1	1
67381			191	1	–	–	–	–	–	–	–	1	–
67382			191	1	–	–	–	–	–	–	–	1	–
67410	5	1428	27	1	1	1	1	1	1	1	1	1	1
67460			93	1	–	–	–	1	1	1	–	1	1
67466	29, 30	3274	93	1	1	1	1	1	1	1	1	1	1
67469			91	1	–	–	–	1	1	1	–	1	1
67490			85	2	1	–	2	2	–	2	–	1	2
67497	34	3535	101, 103, 106	1	1	1	1	1	1	1	1	1	1
	35	3580											
	36	3644											
67515			60	1	–	–	–	–	–	–	–	1	–
67566			75	@	–	–	–	–	–	–	–	–	–
67567	23	2954	75	1	1	1	1	1	1	1	1	1	1
67568	23	2952	74	1	1	1	1	1	1	1	1	1	1
67570			74	1	1	1	1	1	1	1	1	1	1
67575	23	2968	75	1	1	1	1	1	1	1	1	1	1
67680	18	2556	61, 64	1	1	1	1	–	–	–	1	1	–
	19	2644											
67768			67	@	–	–	–	@	–	–	–	@	–
67795	5	1412	27	1	1	1	1	1	1	1	1	1	1
67804			24	1	1	1	1	1	1	1	1	1	1
67828	46	4350	170	18	18	18	18	18	18	18	18	18	18
67836			194	2	–	–	–	–	–	2	–	–	–
67837			194, 197	–	–	–	–	2	–	–	–	–	1
67842			108	1	1	–	–	1	1	1	1	1	1
67843			109	–	–	–	–	@	–	–	–	–	–
67860	37	3718	112	8	8	8	8	8	8	8	8	8	8
67882			97, 99	1	1	1	1	1	1	1	1	1	1
67956			172	@	–	–	–	@	–	–	–	–	–
68019			190, 194, 197	4	–	–	–	4	–	4	–	4	2

AVIAL.DGS
WWW.AVIAL.DGS.COM

Part Number	Figure Number	Index Number	Page Number	Model R1820									
				-40	-40B	-54	-60	-65	-71	-73	-87	-95	-97
68020			190	2	–	–	–	–	–	–	–	2	–
68048			102	1	1	–	1	–	1	1	1	1	–
68135	31	3368	97	1	1	–	1	–	–	–	1	1	–
68154	37	3716	112	1	1	1	1	1	1	1	1	1	1
68221	27, 28	3146	85	1	1	1	1	1	1	1	1	1	1
68222	27, 28	3150	85	1	1	1	1	1	1	1	1	1	1
68296			9	1	1	1	1	1	1	1	1	1	1
68307			9	1	1	1	1	1	1	1	1	1	1
68326			198	–	–	–	–	1	–	1	–	–	1
68328			198	–	–	–	@	–	–	–	–	–	–
68332	3	1102	9	6	6	6	6	6	6	6	6	6	6
68335	38	3910	120	9	9	9	9	9	9	9	9	9	9
68336	38	3912	120	9	9	9	9	9	9	9	9	9	9
68343			43, 44	#	–	–	–	#	#	1	1	1	#
68345	9, 10, 11	1679	39	1	1	1	1	1	1	1	1	1	1
68364	4	1162	11	1	1	1	1	1	1	1	1	1	1
68365	4	1164	11	1	1	1	1	1	1	1	1	1	1
68366	4	1166	11	1	1	1	1	1	1	1	1	1	1
68367			92	1	–	–	–	1	–	–	–	1	–
68368			66	@	–	–	–	@	–	–	–	@	–
68369	16	2410	57	1	1	1	1	1	1	1	1	1	1
68370	9, 11	1747	44	#	–	–	–	#	#	1	1	1	#
68371			44	1	–	–	–	1	1	1	1	1	1
			109	1	1	–	1	–	1	1	1	1	–

AVIALOGS
WWW.AVIALOGS.COM

Part Number	Figure Number	Index Number	Page Number	Model R1820 -40	-40B	-54	-60	-65	-71	-73	-87	-95	-97
68504			118	@	–	–	–	@	@	@	@	@	–
68505			118	@	@	@	@	@	@	@	@	@	@
68505N1	46	3864	118	18	18	18	18	18	18	18	18	18	18
68508	36	3618	105	–	–	–	–	1	–	–	–	–	1
68513	51	4704	182	1	1	1	1	1	1	1	1	1	1
68514	8	1618	34	1	1	1	1	1	1	1	1	1	1
68515	8	1620	34	1	1	1	1	1	1	1	1	1	1
68516	8	1622	34	1	1	1	1	1	1	1	1	1	1
68529	33	3414	97, 99	–	–	1	–	1	1	1	–	–	1
	34	3491											
68530	33	3418	97, 99, 100	–	–	1	–	1	1	1	–	–	1
	34	3495											
68531	29	3290	93	–	–	1	–	1	1	1	–	–	1
68533	33	3424	98, 99, 100	–	–	1	–	1	1	1	–	–	1
	34	3501											
68537	38	3902	120	9	9	9	9	9	9	9	9	9	9
68539	38	3900	120	9	9	9	9	9	9	9	9	9	9
68550			118	@	@	–	–	@	@	@	@	@	@
68554			12	1	–	–	–	1	1	1	–	1	1
68560	38	3906	120	9	9	9	9	9	9	9	9	9	9
68561	38	3904	120	9	9	9	9	9	9	9	9	9	9
68572	46	4330	168	18	18	18	18	18	18	18	18	18	18
68573			168	@	–	–	–	–	–	@	–	@	–
68574	46	4332	168	18	18	18	18	18	18	18	18	18	18
68585	16	2400	56	1	1	1	1	1	1	1	1	1	1
68586			15	1	1	1	1	1	1	1	1	1	1
68587			15	1	1	1	1	1	1	1	1	1	1
68588	46	4302	168	18	18	18	18	18	18	18	18	18	18
68589			168	–	–	–	–	–	18	18	–	–	–
68590	38	3818	116	18	18	18	18	18	18	18	18	18	18
68607			74	1	1	1	1	1	1	1	1	1	1
68608			75	1	1	1	1	1	1	1	1	1	1
68609			74	2	2	2	2	2	2	2	2	2	2
68610	23	2964	75	1	1	1	1	1	1	1	1	1	1
68664	52	4778	185	1	–	–	–	1	–	1	1	–	1
68668			75	@	@	@	@	@	@	@	@	@	@
68668N3	23	2966	75	1	1	1	1	1	1	1	1	1	1
68677	9	1811	45	1	–	–	–	1	1	1	1	1	1
68720			194, 197	2	–	–	–	2	–	2	–	–	1
68778			92	@	–	–	–	@	@	@	–	@	@
68796	51	4712	183	2	2	2	2	2	2	2	2	2	2
68827	38	3956	124	9	9	9	9	9	9	9	9	9	9
68832			171	@	@	–	@	@	@	@	@	@	@
68832N1			171	1	1	–	1	1	1	1	1	1	1
68837			128, 135, 139, 144, 149, 154, 158, 160, 163	8	8	8	8	8	8	8	8	8	8
68838	39	3972	129, 136, 140, 144, 150, 155, 159	8	8	8	8	8	8	8	8	8	8
	40	4026											
	41	4076											
	42	4126											
	43	4176											
	44	4208											
	45	4247											
68839	39	3964	129, 136, 140, 144, 150, 154, 159	9	9	9	9	9	9	9	9	9	9
	40	4018											
	41	4068											
	42	4118											
	43	4168											
	44	4200											
	45	4239											
68840			128, 135, 140, 144, 149, 154, 158, 160, 163	8	8	8	8	8	8	8	8	8	8
68842	39	3966	129, 136, 140, 144, 150, 154, 159	9	9	9	9	9	9	9	9	9	9
	40	4020											
	41	4070											
	42	4120											
	43	4170											

AVIAL.OGS
WWW.AVIAL.OGS.COM

Part Number	Figure Number	Index Number	Page Number	Model R1820 -40	-40B	-54	-60	-65	-71	-73	-87	-95	-97
	~~44~~	4202											
	~~45~~	4241											
68859			177	4	4	4	4	4	4	4	4	4	4
68860			92	1	–	–	–	1	1	1	–	1	1
68865	9, 10, 11	1839	46	1	–	1	1	1	1	1	1	1	1
68884	39	3976	129, 136, 140, 144, 150, 155, 159	8	8	#	8	8	8	8	8	8	8
	40	4030											
	41	4080											
	42	4130											
	43	4180											
	44	4212											
	45	4251											
68904			183	2	2	2	2	2	2	2	2	2	2
68928			72, 76, 78	@	@	–	@	@	@	@	@	@	@
68929			73, 77, 78	@	@	–	@	@	@	@	@	@	@
68930			72	@	–	–	–	@	–	–	–	@	–
68931			77, 78	@	@	–	@	@	@	@	@	@	@
68932			72, 76	@	–	–	–	–	–	–	–	–	–
68933			73, 77, 78	@	@	–	@	@	@	@	@	@	@
68944			76, 77	–	–	–	–	2	–	–	–	–	#
69025			98	–	–	–	–	1	–	–	–	–	–
69030			97, 98	1	–	–	–	1	–	–	–	1	–
69071	15	2312	55	1	1	1	1	1	1	1	1	1	1
69072	9, 10	1787	45, 86	3	2	3	3	3	2	3	2	2	3
	27	3170, 3178											
	28	3170											
69075			98	–	–	–	–	1	–	–	–	–	1
69076	31, 32	3352	97, 98, 99	1	1	1	1	1	1	1	1	1	1
	33	3402											
	34	3477											
69081			166	9	9	–	9	–	9	–	9	8	–
69082			166	9	9	–	9	–	9	–	9	8	–
69083			167	9	9	9	9	9	9	9	9	8	9
69084			167	9	9	9	9	9	9	9	9	8	9
69085			167	9	9	9	9	9	9	9	9	9	9
69087N1			84	1	1	1	1	1	1	1	1	1	1
69089N1			81	1	1	1	1	1	1	1	1	1	1
69116			111	@	–	–	–	@	@	@	@	@	–
69135			118	18	18	18	18	18	18	18	18	18	18
69142	18	2675	65	1	–	–	–	–	–	–	–	1	–
69144	18	2685	65, 66	1	1	1	1	–	–	–	1	1	–
	19	2735											
69163			57	1	–	–	–	–	–	–	–	1	–
69164			57	1	–	–	–	–	–	–	–	1	–
69169			15	1	–	–	–	–	1	–	1	1	–
69170			24	1	–	–	–	1	–	–	–	1	–
69183			118	9	9	9	9	9	9	9	9	9	9
69184			115	@	–	–	–	@	@	@	@	@	–
69207			57	–	–	–	–	1	1	1	–	–	1
69222	1, 2	1073	9	1	1	1	1	1	1	1	1	1	1
69223			4	1	–	–	–	–	1	1	–	–	–
69246			15	1	1	1	1	1	1	1	1	1	1
69271			118	@	–	–	–	@	@	@	@	@	–
69272			54	@	–	–	–	–	@	@	–	@	–
69273	15	2304	54	1	1	1	1	1	1	1	1	1	1
69332	4	1196	11	–	–	1	1	1	–	1	–	–	1
69363	35	3562	102	6	6	–	6	–	6	6	6	6	–
± 69430	5	1366	24	2	2	2	2	2	2	2	2	2	2
69430Y2			24	AR	AR	AR	AR	AR	AR	AR	AR	AR	AR
69477			127, 143, 148, 153, 158	6	–	–	–	5	6	5	8	6	5
69484			127	2	–	–	–	–	–	–	–	–	–
69485			128, 158	3	–	–	–	–	–	–	–	1	–
± 69500	5	1370	24	1	1	1	1	1	1	1	1	1	1
69500Y2			24	AR	AR	AR	AR	AR	AR	AR	AR	AR	AR
69501			73	@	@	–	@	@	@	@	@	@	@
69502			72	1	–	–	–	1	–	–	–	–	1
69510	38	3806	116	36	36	36	36	36	36	36	36	36	36
69511			119	@	@	–	–	@	–	–	@	–	@

 # Quantity varies. Refer to indicated page(s) for explanation.

AVIALOGS
WWW.AVIALOGS.COM

Part Number	Figure Number	Index Number	Page Number	Model R1820 -40	-40B	-54	-60	-65	-71	-73	-87	-95	-97
69524			128, 143, 149, 153, 158	16	–	–	–	16	16	16	16	16	16
69525			128, 135, 140, 144, 150, 154, 158	8	6	5	3	6	8	6	8	6	6
69537			100, 103	–	–	1	–	1	–	–	–	–	1
69545			128, 143, 149, 153, 158	1	–	–	–	1	1	1	1	1	1
69546			148, 153, 158	–	–	–	–	–	1	–	1	1	–
69547	52	4768	185	4	–	–	–	#	–	4	6	–	6
69548			185	2	–	–	–	2	–	2	–	–	–
69549			185	2	–	–	–	2	–	2	–	–	–
69558	18	2540	61	1	–	–	–	–	–	–	–	1	–
± 69560	34	3531	101, 106	–	–	1	–	1	–	–	–	–	1
	36	3640											
69560Y1			101, 106	–	–	AR	–	AR	–	–	–	–	AR
69620	56	5062	195, 197	2	–	–	2	2	–	2	–	–	1
	57	5112											
69632	36	3630	105	–	–	–	–	20	–	–	–	–	20
69634	36	3624	105	–	–	–	–	1	–	–	–	–	1
69655			85	1	1	–	1	1	–	1	–	1	1
69696			127	1	–	–	–	–	–	–	–	–	–
69756	27, 28	3160	86	1	1	1	1	1	1	1	1	1	1
69781			57	1	–	–	–	–	–	–	–	1	–
69785			177	4	4	–	4	4	–	–	4	–	–
69829			8	–	–	–	–	@	–	–	–	–	@
69911	4	1192	11	–	–	1	1	1	1	1	–	–	1
70D3	1, 2	1019	7	1	1	1	1	1	1	1	1	1	1
70D6	4	1272	15	2	2	2	2	2	2	2	2	2	2
810C45-4D			183	–	–	1	–	–	–	–	–	–	–
82D15			93	2	–	–	–	2	2	2	–	2	2
82D16	29, 30	3278	93	2	2	2	2	2	2	2	2	2	2
82D30	29, 30	3282	93	2	2	2	2	2	2	2	2	2	2
85D21	18	2514	60	1	–	–	–	–	–	–	–	1	–
850-16			12	–	–	–	–	1	–	–	–	–	–
851-16	4	1200	12	–	–	1	–	1	–	1	–	–	1
86D11	31, 32	3378	97, 98, 99, 100	3	3	3	3	3	3	3	3	3	3
	33	3426											
	34	3503											
86D2	7	1560, 1572	32	–	–	2	2	–	2	–	2	–	2
86D5	20	2812	67, 192	9	5	5	5	5	5	5	5	9	5
	55	4998											
87D9	9, 10, 11	1709	41, 43	3	2	2	2	3	3	3	3	3	3
890033			33	1	–	–	–	–	–	–	–	–	–
890044			117	9	9	9	9	9	9	9	9	9	9
890045			117	@	@	@	@	@	@	@	@	@	@
890116			33	1	1	1	1	1	1	–	1	–	1
890118			113	@	@	@	@	@	@	@	@	@	@
890147			29	–	–	–	–	–	–	–	–	–	1
890269			176	–	–	–	@	@	@	@	@	@	-
890522			176	–	–	–	1	1	1	–	1	–	1
890526	46	3830	117	9	9	9	9	9	9	9	9	9	9
890555			114	–	–	–	–	–	–	–	–	–	9
890660			176	–	–	–	1	1	1	1	1	1	–
890725			114	9	9	9	9	9	9	9	9	9	–
890728			115	9	9	9	9	9	9	9	9	9	9
890740			115	9	9	9	9	9	9	9	9	9	9
895-30			183	–	–	1	–	–	–	–	–	–	–
89608			117	@	–	–	–	@	@	@	@	@	–
89609			117	@	–	–	–	@	@	@	@	@	–
89905			33	1	–	–	–	1	1	1	1	1	1
89979N1			113	–	–	–	–	–	@	@	–	–	–
89979N2			113	@	–	–	–	@	–	–	@	@	–
90D13	39	3960	129, 136, 140, 144, 150, 154, 159	2	2	2	2	2	2	2	2	2	2
	40	4014											
	41	4064											
	42	4114											
	43	4164											
	44	4196											
	45	4235											

 # Quantity varies. Refer to indicated page(s) for explanation.

Part Number	Figure Number	Index Number	Page Number	Model R1820									
				-40	-40B	-54	-60	-65	-71	-73	-87	-95	-97
90D31	26	3062	79	6	6	6	6	6	6	6	6	6	6
93D16	1, 2	1061	8	1	1	1	1	1	1	1	1	1	1
93D18	9, 10, 11	1817	45, 182	3	3	4	4	4	4	4	3	3	4
93D20	55	4986	192	2	–	–	–	–	–	–	–	2	–
99D12	27, 28	3122	84	2	2	2	2	2	2	2	2	2	2

AVIALOGS
WWW.AVIALOGS.COM

SECTION IV

STANDARD PARTS LIST

Part Number	Nomenclature	Model R1820 -40	-40B	-54	-60	-65	-71	-73	-87	-95	-97
AN STANDARD PARTS											
AN4023-1	ELBOW—.125" OD tube primer	5	–	–	–	5	–	5	5	–	5
AN4027-1	WASHER—.718" x .968" x .081"	18	18	18	18	18	18	18	18	18	18
AN425A4-7	RIVET—Flat, countersunk head, .125" x .440"	1	–	1	1	1	–	1	–	–	1
AN430AD4-4	RIVET—Round head, .125" x .250"	63	159	119	119	63	63	63	63	56	63
AN430AD4-9	RIVET—Round head, .125" x .560"	6	6	6	6	6	6	6	6	6	6
AN515-6-8	SCREW—Round head, No. 6-32 thread x .500"	58	24	21	15	55	58	52	58	50	55
AN520-10-10	SCREW—Round head, No. 10-32 thread x .620"	31	19	21	38	32	20	32	32	17	36
AN520-10-8	SCREW—Round head, No. 10-32 thread x .625"	2	2	3	20	2	2	2	2	2	2
AN780-2	NIPPLE—.125" tube union	5	–	–	–	5	–	5	5	–	5
AN780-4	NIPPLE—Solder type, .250" OD tube union	–	–	–	–	–	1	–	–	1	–
AN800-4	CONE—Solder type, .250" tube union	–	1	–	–	–	1	–	–	1	–
AN805-2	NUT—Solder type, .125" tube union	10	–	–	–	10	–	10	10	–	10
AN805-4	NUT—.250" tube union	–	1	4	4	–	1	–	–	1	–
AN900-10	GASKET—Copper asbestos, .633" x .883" x .094"	6	4	4	5	6	4	4	4	6	6
AN900-14	GASKET—Copper asbestos, .882" x 1.132" x .094"	1	1	1	1	1	1	1	1	1	1
AN900-16	GASKET—Copper asbestos, 1.008" x 1.258" x .094"	1	1	1	1	1	1	1	1	1	1
AN900-18	GASKET—Copper asbestos, 1.132" x 1.382" x .094"	5	3	3	3	3	3	1	3	3	3
AN900-20	GASKET—Copper asbestos, 1.257" x 1.507" x .094"	1	1	1	1	1	1	1	1	1	1
AN900-22	GASKET—Copper asbestos, 1.383" x 1.633" x .094"	2	2	2	2	2	2	2	2	2	2
AN900-5	GASKET—Copper asbestos, .321" x .571" x .094"	12	12	12	12	12	12	12	12	12	12
AN900-8	GASKET—Copper asbestos, .508" x .758" x .094"	2	2	2	2	2	2	2	2	2	2
AN912-10	BUSHING—.750" x 1.000" pipe thread, hex head	2	2	2	2	1	2	1	2	–	2
AN913-3	PLUG—Pipe, square head, drilled, .375"-18 N.P.T.	2	2	2	2	2	2	2	2	2	3
AN913-6	PLUG—Pipe, square head, drilled, .750"-14 N.P.T., Brass	1	1	1	1	1	1	1	1	1	1
AN913-6S	PLUG—Pipe, square head, drilled, .750"-14 N.P.T., Steel	–	–	–	1	–	–	–	–	–	–
ARMY STANDARD PARTS											
356-428	PALNUT—.250"-28 thread	42	42	44	42	42	42	42	42	41	42
356-524	PALNUT—.313"-24 thread	46	46	36	46	46	46	46	46	46	46
356-624	PALNUT—.375"-24 thread	12	12	12	12	12	12	12	12	12	12
385-50-5	PIN—Taper No. 00000 x .625"	1	1	1	1	1	1	1	1	1	1
810C45-4D	ELBOW—.250" OD tube-45°, male	–	–	1	–	–	–	–	–	–	–
850-16	ELBOW—1.000" ID hose, 90°	–	–	–	–	1	–	–	–	–	–
851-16	ELBOW—1.000" ID hose, 45°	–	–	1	–	1	–	1	–	–	1
895-30	TEE FITTING—.125" pipe tap	–	–	1	–	–	–	–	–	–	–
VENDORS' STANDARD PARTS											
AJ5-35	FASTENER—Dzus Fastener Company	–	2	2	2	–	–	–	–	–	–
AJ5-45	FASTENER—Dzus Fastener Company	–	2	2	2	–	–	–	–	–	–
A5-30	FASTENER—Dzus Fastener Company	–	2	2	2	–	–	–	–	–	–
B1001-1	MAGNETO—Edison Splitdorf (SF9LD1)	–	–	2	–	–	–	–	–	–	–
B1003-1	MAGNETO—Edison Splitdorf (SF9LD-3)	–	–	2	–	–	–	–	–	–	–
C34S	SPARK PLUG ASSEMBLY—Champion Spark Plug Company	–	–	18	–	18	–	–	18	–	18
C35S	SPARK PLUG ASSEMBLY—Champion Spark Plug Company	–	–	–	18	–	–	–	18	–	18
D31040	IGNITION CABLE ASSEMBLY—Titeflex	–	–	–	1	1	1	–	1	–	1
D31043	IGNITION CABLE ASSEMBLY—Titeflex	–	–	–	1	1	1	–	1	–	1
E605-4P-AN	IGNITION CABLE ASSEMBLY—Breeze	–	–	–	–	–	–	–	@	@	–
E611-4P-AN	IGNITION CABLE ASSEMBLY—Breeze	–	–	–	–	@	–	@	@	–	–
E615-4P-AN	IGNITION CABLE ASSEMBLY—Breeze	@	–	–	–	@	–	–	–	–	–
E667-4P-AN	IGNITION CABLE ASSEMBLY—Breeze	–	@	@	@	@	@	–	@	@	–
E668-4P-AN	IGNITION CABLE ASSEMBLY—Breeze	@	@	–	@	–	–	–	–	–	–
E757-4P-AN	IGNITION CABLE ASSEMBLY—Breeze	1	1	1	1	1	1	1	1	1	–
E757-4P-4R	IGNITION CABLE ASSEMBLY—Breeze	–	–	–	1	1	1	1	1	1	–
FB14	CLAMP—Wittek Manufacturing Company	6	6	6	6	6	6	–	6	–	6
H4E3	FUEL PUMP—Pesco	–	–	–	1	–	–	–	–	–	–
LS298	SPARK PLUG ASSEMBLY—B. G. Corporation	–	–	–	–	–	18	–	–	–	–

WWW.AVIATIONGS.COM

Part Number	Nomenclature	Model R1820 -40	-40B	-54	-60	-65	-71	-73	-87	-95	-97
LS38C	SPARK PLUG ASSEMBLY—Aero Spark Plug Company	–	–	–	–	@	–	–	–	–	–
LS38C-E111	SPARK PLUG ASSEMBLY—Aero Spark Plug Company	–	–	–	18	18	18	–	–	–	–
LS465	SPARK PLUG ASSEMBLY—B. G. Corporation	18	18	–	18	18	18	18	18	–	–
LS465A	SPARK PLUG ASSEMBLY—B. G. Corporation	–	–	18	18	–	–	–	18	–	–
LS85	SPARK PLUG ASSEMBLY—AC Spark Plug Company	–	–	–	–	–	@	–	@	@	@
LS87	SPARK PLUG ASSEMBLY—AC Spark Plug Company	–	–	–	–	–	18	–	18	18	18
MJR9A307	MAGNETO—Bosch (SF9LU3)	–	–	–	1	1	–	–	–	–	1
MJR9A309	MAGNETO—Bosch (SF9LU3)	–	–	–	1	1	–	–	–	–	1
M16	CLAMP—Aircraft Standard Parts Company	–	–	–	54	54	54	54	54	54	54
SD601	SCREW—Shakeproof	18	18	18	18	18	18	18	18	18	18
SD602	SCREW—Shakeproof	12	12	12	12	12	12	12	12	12	12
S5-200	SPRING—Dzus Fasteners Company	–	10	8	8	–	–	–	–	–	–
10-14477	BOX—Scintilla Magneto Company	#	2	–	–	2	2	2	2	2	2
10-16525-4	MAGNETO—Scintilla Magneto Company (SF9L3)	@	–	–	–	–	–	–	–	–	–
10-20700-1	MAGNETO—Scintilla Magneto Company (SF9LN4)	2	2	–	–	2	2	2	2	2	–
10-21225-1	MAGNETO—Scintilla Magneto Company (SF9LN4)	2	–	–	–	–	–	–	–	–	–
10658	FILTER—Cuno Engineering Corporation	@	–	–	–	–	–	–	–	–	–
10779	FILTER—Cuno Engineering Corporation	–	–	–	–	@	–	–	–	–	@
11210	FILTER—Cuno Engineering Corporation	1	1	–	1	1	1	1	1	1	1
1210	LOCKWASHER—Shakeproof	12	–	–	–	12	–	–	–	12	–
3154-2	PACKING—Breeze	1	1	–	1	1	1	1	1	1	1
375	GROMMET—Dzus Fastener Company	–	6	6	6	–	–	–	–	–	–
392035-5	CARBURETOR AND ADAPTER ASSEMBLY—Stromberg (PD 12H3)	–	–	–	–	–	@	–	@	@	–
392058	CARBURETOR AND ADAPTER ASSEMBLY—Stromberg (PD 12H3)	1	–	–	–	–	–	–	–	–	–
392313	CARBURETOR AND ADAPTER ASSEMBLY—Stromberg (PD 12H3)	–	1	–	–	–	1	–	1	1	–
392472	CARBURETOR AND ADAPTER ASSEMBLY—Stromberg (PD 12K4)	–	–	–	1	–	–	–	–	–	–
395093	CARBURETOR AND ADAPTER ASSEMBLY—Stromberg (PD 12H3)	–	–	1	–	–	–	–	–	–	–
395563-3	CARBURETOR AND ADAPTER ASSEMBLY—Stromberg (PD 12H2)	–	–	–	–	1	–	1	–	–	1
5S5	SPARK PLUG ASSEMBLY—Bendix	18	–	18	–	–	–	–	–	–	–
651TE	PLUG—Lisle Corporation	1	1	1	1	1	1	1	1	1	1

WRIGHT STANDARD PARTS

1D1	NUT—Slotted hex, .250″-28 thread	12	8	6	6	–	–	–	6	12	–
1D4	NUT—Slotted hex, .313″-24 thread	25	25	21	25	25	21	21	25	21	21
1D5	NUT—Slotted hex, .313″-24 thread	3	3	3	3	3	3	3	3	3	3
1D7	NUT—Slotted hex, .375″-24 thread	2	–	–	–	2	2	2	–	2	2
1D91	NUT—Slotted hex, .375″-24 thread	10	10	–	10	–	10	10	10	10	–
1D95	NUT—Slotted hex, special .250″-28 thread	4	–	–	–	4	4	–	–	–	4
102D1	PLUG—Headless, slotted, No. 10-32 thread x .188″	6	–	–	6	6	–	6	–	–	3
102D12	PLUG—Headless, slotted, .313″-24 thread x .219″	2	2	1	2	1	2	2	2	2	1
102D13	PLUG—Headless, slotted, .375″-24 thread x .188″	–	–	1	–	1	–	–	–	–	1
102D33	PLUG—Headless, slotted, standard form tapered, .250″-28 N.P.T.	#	#	#	#	#	#	#	#	#	#
¢ 118D2	STUD—Straight, plain, .250″-20 and .250″-28 thread x 1.060″	36	36	36	36	36	36	36	36	36	36
¢ 118D6	STUD—Straight, plain, .250″-20 and .250″-28 thread x 1.000″	2	–	–	–	2	2	2	2	2	2
12D15	PIN—Straight, .063″ x .125″	5	–	–	–	–	–	–	–	5	–
123D4	SCREW—Round head, No. 10-32 thread x .500″	–	–	–	9	1	–	1	–	–	1
123D9	SCREW—Round head, No. 10-32 thread x 1.250″	–	–	–	–	–	–	–	–	–	1
124D107	NUT—Slotted hex, shouldered, special, .313″-24 thread	1	1	1	1	1	1	1	1	1	1
124D112	NUT—Drilled hex, special, .313″-24 thread	1	1	1	1	1	1	1	1	1	1
124D115	NUT—Drilled hex, special, .250″-28 thread x 1.660″	3	3	–	3	3	3	3	3	3	3
124D118	NUT—Hex, special, .375″-24 thread	1	1	1	1	1	1	1	1	1	1
124D130	NUT—Slotted hex, shouldered, special, .313″-24 thread, LH thread	–	–	–	–	20	–	–	–	–	20
124D161	NUT—Special, lockwire, .250″-28 thread x .360″	3	3	3	3	–	–	–	3	–	–
124D58	NUT—Acorn, special, .313″-24 thread	2	2	2	2	2	2	2	2	2	2
124D75	NUT—Slotted hex, special, .375″-24 thread	2	2	–	2	–	2	2	2	2	–
124D81	NUT—Drilled hex, special, .313″-24 thread	2	2	2	2	2	2	2	2	2	2
124D82	NUT—Drilled hex, special, .313″-24 thread	2	2	2	2	2	2	2	2	2	2
124D83	NUT—Drilled hex, special, .313″-24 thread	1	1	1	1	1	1	1	1	1	1

 # Quantity varies. Part No. 10-144-77—See note on page 172.
Part No. 102D33—See note on pages 26, 55, 84 and 85.

Part Number	Nomenclature	Model R1820 -40	-40B	-54	-60	-65	-71	-73	-87	-95	-97
124D95	NUT—Hex, special, .250″-28 thread	72	72	72	72	72	72	72	72	72	72
125D114	BOLT—Hex head, special, No. 12-24 thread x .540″	4	4	4	4	4	4	4	4	4	4
¢ 126D145	STUD—Stepped, drilled, .375″-24 and .438″-14 thread x 2.060″	2	2	–	2	–	2	2	2	2	–
¢ 126D154	STUD—Stepped, necked, plain, .313″-24 and .375″-16 thread x 1.750″	2	2	2	2	2	2	2	2	2	2
¢ 126D169	STUD—Stepped, necked, drilled, .250″-28 and .313″-18 thread x 1.260″	1	1	1	1	1	1	1	1	1	1
¢ 126D177	STUD—Stepped, necked, drilled, .313″-24 and .375″-16 thread x 1.260″	1	1	1	1	1	1	1	1	1	1
129D64	GASKET—Two bolt type	1	1	1	1	1	1	1	1	1	1
129D66	GASKET—Two bolt type	1	1	1	1	1	1	1	1	1	1
129D67	GASKET—Two bolt type	1	–	–	–	1	1	1	1	1	1
129D78	GASKET—Two bolt type	1	1	2	2	2	2	2	1	1	2
129D88	GASKET—Two bolt type	@	@	@	@	@	@	@	@	@	@
13D23	PIN—Straight, .125″ x .438″	1	–	1	1	1	–	1	–	–	1
13D35	PIN—Straight, .125″ x .500″	4	4	4	4	4	4	4	4	4	4
13D36	PIN—Straight, .125″ x .250″	1	–	–	–	–	–	–	–	1	–
13D38	PIN—Straight, .125″ x .500″	36	36	36	36	36	36	36	36	36	36
13D54	PIN—Straight, .125″ x .281″	2	–	–	–	–	–	–	–	2	–
13D55	PIN—Straight, .125″ x .400″	1	1	1	1	1	1	1	1	1	1
13D59	PIN—Straight, .125″ x .195″	1	–	–	–	1	–	1	1	1	1
≠ 13D6	PIN—Straight, .125″ x .250″	2	2	2	2	2	2	2	2	2	2
130D46	FLANGE—Two bolt type, blind	1	1	1	1	1	1	1	1	1	1
130D50	FLANGE—Two bolt type, blind	1	1	–	–	–	–	–	1	1	–
132D1	SCREW—Fillister head, lockwire, No. 12-24 thread x .375″	1	1	1	1	1	1	1	1	1	1
137D11	SCREW—Flat fillister head, lockwire, .250″-20 thread x 1.780″	5	5	5	5	5	5	5	5	5	5
143D4	SCREW—Oval fillister head, lockwire, .250″-20 thread x 1.000″	–	–	4	–	–	–	–	–	–	–
146D2	PIN—.313″ x .560″	1	1	1	1	1	1	1	1	1	1
147D4	SCREW—Flat fillister head, No. 10-32 thread x .400″	2	2	2	2	2	2	2	2	2	2
150D2	SCREW—Flat fillister head, lockwire, .250″-28 thread x .500″	27	27	27	27	27	27	27	27	27	27
150D5	SCREW—Oval fillister head, lockwire, .250″-20 thread x 2.625″	4	4	–	4	4	4	4	4	4	4
150D9	SCREW—Oval fillister head, lockwire, No. 10-24 thread x 1.469″	2	–	–	–	2	–	2	2	–	2
155D49	BEARING—Roller, special	1	1	1	1	1	1	–	1	1	–
155D50	BEARING—Roller, special	1	1	–	1	1	1	–	1	1	–
155D58	BEARING—Roller, special	–	–	1	–	1	1	1	–	–	1
155D59	BEARING—Roller, special	–	–	–	–	1	1	1	–	–	1
156D11	NUT—.500″ tube union	–	–	2	2	–	2	–	2	–	3
157D10	CONE—Solder type, .250″ special	–	–	@	–	–	–	–	–	–	–
157D16	CONE—Solder type, .250″ special	–	–	4	4	–	–	–	–	–	–
157D8	CONE—.500″ tube union	–	–	2	2	–	2	–	2	–	3
159D17	ELBOW—.500″ tube union, 90°	–	–	–	1	–	–	–	–	–	2
159D3	ELBOW—Solder type, .250″ tube union	–	1	–	–	–	–	–	–	–	–
163D20	CONE—Solder type, .125″ OD tube, special	10	–	–	–	10	–	10	10	–	10
163D50	PLUG—Primer substituting, long	1	1	1	1	1	1	1	1	1	1
163D51	PLUG—Primer substituting, short	1	1	1	1	1	1	1	1	1	1
163D55	PLUG—Fuel primer discharge, short	–	1	–	–	–	1	–	–	2	–
163D63	NIPPLE—Fuel primer discharge, long, .250″ OD tube, special	–	–	–	2	–	–	–	–	–	–
163D64	FITTING—.125″ pipe thread, male and female	1	1	1	1	1	1	1	1	1	1
163D85	NIPPLE—Primer, .250″ OD tube, special	–	–	2	–	–	–	–	–	–	–
163D87	FITTING—.250″ and .375″ N.P.T., male and female	–	–	–	1	–	–	–	–	–	1
163D90	ELBOW—Solder type, .500″ tube union, special	–	–	1	1	–	1	–	1	–	1
166D3	BUSHING—Hex head, .375″ and .500″ pipe thread	–	–	–	–	–	–	–	–	–	1
169D11	COUPLING—.500″ tube union	–	–	1	1	–	1	–	1	–	1
17D14	PIN—Straight, .094″ x .188″	3	3	3	3	–	–	–	3	–	–
17D20	PIN—Straight, .095″ x .313″	1	1	1	1	1	1	1	1	1	1
17D26	PIN—Straight, .093″ x .172″	3	3	3	3	3	3	3	3	3	3
172D6	NIPPLE—.125″ N.P.T. x .438″, hex, shouldered	–	–	1	–	–	–	–	–	–	–
18D28	RIVET—Flat countersunk head, .094″ x .500″	1	–	–	1	1	–	1	–	–	1
186D8	TEE—.250″ tube union	–	–	1	1	–	–	–	–	–	–
189D58	LOCKWASHER—.262″ x .530″ x .040″	18	–	–	–	18	18	18	18	18	–
189D59	LOCKWASHER—.326″ x .601″ x .045″	27	27	27	27	27	27	27	27	27	27
¢ 19D16	BUSHING—Blind screw, special, .313″-24 and .500″-20 thread x 1.260″	12	12	12	12	12	12	12	12	12	12
2D1	NUT—Plain hex, .250″-28 thread	42	44	40	42	42	42	42	42	41	42
2D39	NUT—Plain hex, .313″-24 thread	@	@	–	@	@	@	@	@	@	@
2D40	NUT—Plain hex, special, .313″-24 thread	10	10	10	10	10	10	10	10	10	10
2D7	NUT—Plain hex, .375″-24 thread	12	12	12	12	12	12	12	12	12	12
20D10	PIN—Straight, .188″ x .250″	1	–	1	1	1	–	1	–	–	1
≠ 20D12	PIN—Straight, .188″ x .500″	4	2	3	2	3	2	–	2	–	3

Part Number	Nomenclature	Model R1820 -40	-40B	-54	-60	-65	-71	-73	-87	-95	-97
20D9	PIN—Straight, .188" x .375"	1	1	2	1	1	1	1	1	1	1
2011D5	FLANGE—Two bolt type for .500" OD tube	–	–	1	1	–	1	–	1	–	1
2017D10	RING—Lock, 2.120" ID	1	1	1	1	1	1	1	1	1	1
2019D19	CIRCLET—1.845" OD	1	1	1	1	1	1	1	1	1	1
2019D3	CIRCLET—.797" OD	1	1	1	1	1	1	1	1	1	1
2019D7	CIRCLET—.860" OD	1	1	1	1	1	1	1	1	1	1
2019D8	CIRCLET—1.100" OD	–	–	–	–	1	–	1	–	–	1
2025D2	PLUG—Flat head, slotted, .625"-18 thread	2	–	–	–	–	–	–	–	2	–
¢ 2028D15	STUD—Straight, drilled, .250"-20 and .250"-28 thread x 1.688"	2	–	–	–	–	–	–	–	2	–
¢ 2028D21	STUD—Straight, drilled, .250"-20 and .250"-28 thread x 2.120"	3	3	3	3	3	3	3	3	3	3
¢ 2028D32	STUD—Straight, drilled, .250"-20 and .250"-28 thread x 2.760"	2	2	2	2	2	2	2	2	2	2
¢ 2028D37	STUD—Straight, drilled, .250"-20 and .250"-28 thread x 1.500"	3	3	3	3	3	3	3	3	3	3
¢ 2028D7	STUD—Straight, drilled, .250"-28 and .250"-20 thread x 1.180"	4	–	–	–	–	–	–	–	4	–
¢ 2028D8	STUD—Straight, drilled, .250"-20 and .250"-28 thread x 1.250"	6	6	6	6	6	6	6	6	6	6
¢ 2029D17	STUD—Straight, plain, .313"-18 and .313"-24 thread x 1.500"	3	3	3	3	3	3	3	3	3	3
¢ 2029D18	STUD—Straight, plain, .313"-18 and .313"-24 thread x 2.000"	2	2	2	2	2	2	2	2	2	2
¢ 2029D19	STUD—Straight, plain, .313"-18 and .313"-24 thread x 2.060"	2	2	2	2	2	2	2	2	2	2
¢ 2029D22	STUD—Straight, plain, .313"-18 and .313"-24 thread x 1.750"	1	1	1	1	1	1	1	1	1	1
¢ 2029D67	STUD—Straight, plain, .313"-18 and .313"-24 thread x 1.560"	13	13	13	13	13	13	13	13	13	13
¢ 2029D9	STUD—Straight, necked, plain, .313"-18 and .313"-24 thread x 1.310"	6	6	6	6	6	6	6	6	6	6
¢ 2030D10	STUD—Straight, drilled, .313"-18 and .313"-24 thread x 1.440"	1	1	1	1	1	1	1	1	1	1
¢ 2030D23	STUD—Straight, drilled, .313"-18 and .313"-24 thread x 2.250"	3	3	3	3	3	3	3	3	3	3
¢ 2030D31	STUD—Straight, drilled, .313"-18 and .313"-24 thread x 2.750"	2	2	2	2	2	2	2	2	2	2
¢ 2030D9	STUD—Straight, drilled, .313"-18 and .313"-24 thread x 1.380"	4	4	4	4	4	4	4	4	4	4
¢ 2031D20	STUD—Straight, plain, .375"-16 and .375"-24 thread x 2.188"	9	9	9	9	9	9	9	9	9	9
¢ 2031D22	STUD—Straight, plain, .375"-16 and .375"-24 thread x 1.813"	21	21	21	21	21	21	21	21	21	21
¢ 2032D10	STUD—Straight, necked, drilled, .375"-16 and .375"-24 thread x 1.680"	12	12	12	12	12	12	12	12	12	12
¢ 2032D7	STUD—Straight, necked, drilled, .375"-16 and .375"-24 thread x 1.500"	2	2	–	2	–	2	2	2	2	–
2034D11	PLUG—Headless, slotted, No. 8-32 thread x .260"	2	–	–	2	2	–	2	–	–	2
2037D21	PIN—.310" and .313" diameters x .440"	1	1	1	1	1	1	1	1	1	1
2037D59	PIN—.180" and .220" diameters x .370"	1	1	1	1	–	–	1	–	–	–
2043D62	STUD—Straight, drilled, special, .313"-24 and .313"-24 x 2.000"	4	4	4	4	4	4	4	4	4	4
¢ 2043D69	STUD—Necked, drilled, .313"-18 and .313"-24 thread x 5.280"	8	8	8	8	8	8	8	8	8	8
¢ 2043D73	STUD—Straight, necked, drilled, .313"-18 and .313"-24 thread x 5.220"	8	8	8	8	8	8	8	8	8	8
2045D14	SCREW—Hex head, lockwire, .438"-20 thread x 4.000"	18	18	18	18	18	18	18	18	18	18
2045D19	BOLT—Hex head, for slotted nut, .438"-20 thread x 1.400"	9	9	9	9	9	9	9	9	9	9
2045D21	SCREW—Hex head, lockwire, .438"-20 thread x 1.500"	8	8	8	8	8	8	8	8	8	8
2045D22	SCREW—Hex head, lockwire, .438"-20 thread x 2.500"	8	8	8	8	8	8	8	8	8	8
≠ 2045D23	SCREW—Hex head, necked, lockwire, .438"-20 thread x 1.000"	@	@	@	@	@	@	@	@	@	@
2045D24	SCREW—Hex head, necked, special, .438"-20 thread x .790"	8	8	–	–	8	8	8	8	8	8
≠ 2045D41	SCREW—Hex head, necked, lockwire, .438"-20 thread x 1.000"	18	18	–	18	18	18	18	18	18	18
2045D44	SCREW—Hex head, necked, special, .438"-20 thread x .500"	8	8	8	8	8	8	8	8	8	8
2045D51	SCREW—Necked, collar, hex head, special, .438"-20 thread x 1.000"	162	162	180	162	162	162	162	162	162	162
2052D12	PLUG—Cup, .938" hole	1	–	–	–	1	–	–	–	–	1
2052D21	PLUG—Cup, .969" hole	1	1	1	1	1	1	1	1	1	1
2054D7	SCREW—Flat fillister head, lockwire, No. 10-32 thread x .406"	12	–	–	–	12	–	–	–	12	–
2057D17	SCREW—Extended hex head, lockwire, .375"-24 thread x 3.380"	–	–	10	–	10	–	–	–	–	10
2058D32	HOSE—.940" x 1.250" x .760"	@	@	@	@	@	@	@	@	@	@
2058D33	HOSE—.970" x 1.270" x 2.500"	@	@	@	@	@	@	–	@	–	@
2058D54	HOSE—.970" x 1.270" x 2.750"	18	18	18	18	18	18	18	18	18	18
2058D80	HOSE—.970" x 1.270" x 3.620"	1	1	1	1	1	1	–	1	–	1
2059D15	DISC—1.000" diameter x .022"	1	1	1	1	1	1	1	1	1	1
2059D25	DISC—.666" diameter x .145"	1	1	1	1	–	–	–	1	–	–
2062D17	ELBOW—.250" OD tube male	–	–	1	–	–	–	–	–	–	–
2067D1	LOCKWASHER—1.563" threaded nut	@	–	–	–	@	–	–	–	–	–
2067D10	LOCKWASHER—Name plate to oil sump attaching bolt	4	4	4	4	4	4	4	4	4	4
2067D12	LOCKWASHER—Tab, No. 12 diameter screw	1	1	1	1	1	1	1	1	1	1
2067D19	LOCKWASHER—Tab, .375" diameter bolt	4	4	4	4	–	–	–	4	–	–
2067D2	LOCKWASHER—Tab, .313" diameter bolt	1	1	1	1	1	1	1	1	1	1
2067D21	LOCKWASHER—Tab, 1.563" nut	1	1	1	1	1	1	1	1	1	1
2067D8	LOCK—Tab, .438" diameter bolt	1	1	–	1	–	–	–	1	1	–
2067D9	LOCKWASHER—Tab, .438" diameter bolt	–	–	1	–	1	1	1	–	–	1

Part Number	Nomenclature	Model R1820 -40	-40B	-54	-60	-65	-71	-73	-87	-95	-97
2069D20	BOLT—Hex head, for slotted nut, special, .500"-20 thread x 1.300"	–	–	–	–	24	–	–	–	–	24
2070D1	SCREW—Flat head, special, .313"-18 thread x .313"	2	2	2	2	2	2	2	2	2	2
2070D11	BOLT—Flat countersunk head, for slotted nut, .313"-24 thread x 1.406"	4	4	4	4	4	4	4	4	4	4
2070D29	BOLT—Flat head, special, .313"-24 thread x .940"	9	8	9	7	9	9	9	9	6	9
2070D64	SCREW—Flat fillister head, special, .313"-18 thread x .440"	3	3	3	3	3	3	3	3	3	3
2072D7	PLUG—Square head, .875"-16 thread	1	1	1	1	1	1	1	1	1	1
2072D9	PLUG—Hex head, lockwire, .688"-16 thread	1	–	–	–	1	1	–	–	–	1
2075D14	BOLT—Hex head, special, .438"-20 thread x .620"	1	1	–	1	–	–	–	1	1	–
2075D15	SCREW—Hex head, special, .438"-20 thread x .540"	–	–	1	–	1	1	1	–	–	1
2075D16	SCREW—Hex head, slotted, special, No. 12-24 thread x .480"	1	1	1	1	1	1	1	1	1	1
2075D7	SCREW—Oval fillister head, lockwire, special, No. 8-32 thread x .422"	1	1	1	1	1	1	1	1	1	1
2077D20	PIN—Headed, .250" x .780"	1	1	–	1	–	1	1	1	1	–
2077D24	PIN—Headed, .250" x 1.330"	–	–	1	–	1	–	–	–	–	1
2077D9	PIN—Headed, special, .219" x .328"	6	6	–	6	–	6	6	6	6	–
2083D1	RING—Packing, .600" ID	9	8	8	8	9	9	9	9	9	9
2083D3	RING—Packing, .438" ID	–	–	–	–	2	–	2	–	–	2
2083D45	RING—Packing, 6.080" ID	9	9	9	9	9	9	9	9	9	9
2083D57	RING—Packing, .555" ID	36	36	36	36	36	36	36	36	36	36
2084D8	PLUG—Crankpin, 1.625" diameter	1	1	1	1	1	1	1	1	1	1
2087D1	NUT—Elastic stop, hex, No. 6-32 thread	58	24	21	15	55	68	52	58	50	55
2087D2	NUT—Elastic stop, hex, No. 10-32 thread	37	37	38	38	38	38	38	38	33	42
2087D3	NUT—Elastic stop, hex, .250"-28 thread	6	2	–	–	–	–	–	–	–	–
2087D6	NUT—Elastic stop, hex, No. 10-32 thread	–	–	–	3	–	–	–	–	–	–
2087D9	NUT—Elastic stop, hex, No. 10-32 thread	12	–	3	8	12	2	12	14	–	14
2093D14	WASHER—Spherical, for .438" bolt	180	180	180	180	180	180	180	180	180	180
2093D16	WASHER—Spherical, for .438" bolt	18	18	18	18	18	18	18	18	18	18
2093D17	WASHER—Spherical, for .563" bolt	36	36	36	36	36	36	36	36	36	36
2093D7	WASHER—Spherical, for .375" bolt	8	8	8	8	8	8	8	8	8	8
2097D10	SPACER—.580" x .720" x .540"	2	–	–	2	2	–	2	–	–	1
2097D4	SPACER—Plain, .125" x .500" x .260"	9	–	–	9	–	–	–	–	–	–
21D80	BEARING—Radial ball	@	–	–	–	@	–	–	–	–	–
21D92	BEARING—Radial ball, special	1	1	1	1	–	1	1	1	1	–
21D93	BEARING—Radial ball, special	–	–	–	–	1	–	–	–	–	1
2101D3	NUT—Slotted hex, .250"-28 thread	5	5	5	9	5	5	5	5	5	5
2101D4	NUT—Slotted hex, .313"-24 thread	2	2	2	2	22	2	2	2	2	22
2101D5	NUT—Slotted hex, .375"-24 thread	6	4	4	6	6	4	6	4	4	5
2101D6	NUT—Slotted hex, .438"-20 thread	9	9	9	9	9	9	9	9	9	9
2101D7	NUT—Slotted hex, .500"-20 thread	–	–	–	–	24	–	–	–	–	24
2105D12	PLUG—Pipe square head drilled	1	–	–	–	–	–	–	–	1	–
2108D3	WIRE—Magneto booster, shielded	1	1	–	1	–	–	–	–	–	–
2109D4	GROMMET—.250" x .625" x .188"	–	–	–	2	–	–	–	–	–	–
2119D12	BUSHING—Split, 1.191" x 1.300" x 1.385"	8	8	8	8	8	8	8	8	8	8
2119D17	BUSHING—Split, 1.501" x 1.631" x 1.770"	9	9	9	9	9	9	9	9	9	9
2125D2	PLUG—Slotted flat head lockwire .313"-24 thread	10	10	10	10	10	10	10	10	10	10
2125D3	PLUG—Flat head, slotted, lockwire, .375"-24 thread	2	2	–	2	–	2	2	2	2	–
2125D5	PLUG—Flat head, slotted, lockwire, .500"-20 thread	2	2	2	2	2	2	2	2	2	2
2126D1	PLUG—Hex head, lockwire, .625"-18 thread	1	1	–	1	2	–	–	1	1	2
2132D14	PLUG—Pipe hex head, special, .500"-14 thread	1	1	1	1	1	1	1	1	1	1
¢ 2134D85	STUD—Stepped, plain, .313"-24 and .375"-16 thread x 1.600"	2	2	2	2	2	2	2	2	2	2
¢ 2135D100	STUD—Stepped, drilled, .313"-24 and .375"-16 thread x 1.750"	4	4	4	4	4	4	4	4	4	4
¢ 2135D135	STUD—Stepped, drilled, .313"-24 and .375"-16 thread x 2.100"	2	2	2	2	2	2	2	2	2	2
¢ 2135D75	STUD—Stepped, drilled, .313"-24 and .375"-16 thread x 1.500"	2	–	2	2	–	2	–	2	–	2
¢ 2135D90	STUD—Stepped, drilled, .313"-24 and .375"-16 thread x 1.650"	3	3	3	3	3	3	3	3	3	3
¢ 2136D55	STUD—Stepped, plain, .250"-28 and .313"-18 thread x 1.150"	72	72	72	72	72	72	72	72	72	72
¢ 2137D80	STUD—Stepped, drilled, .250"-28 and .313"-18 thread x 1.400"	5	5	5	5	5	5	5	5	5	5
¢ 2138D150	STUD—Stepped, necked, plain, .375"-24 and .438"-14 thread x 2.400"	8	8	8	8	8	8	8	8	8	8
¢ 2139D145	STUD—Stepped, necked, drilled, .375"-24 and .438"-14 thread x 2.350"	8	8	8	8	8	8	8	8	8	8
2142D1	PLUG—Pipe, headless, .125"-27 N.P.T.	#	#	#	#	#	#	#	#	#	#
2142D2	PLUG—Pipe, headless, .250"-18 N.P.T.	1	1	1	1	1	1	1	1	1	1
¢ 2144D75	STUD—Drilled, .250"-28 and .313"-18 thread x 1.200"	2	2	2	2	2	2	2	2	2	2
¢ 2144D85	STUD—Stepped, drilled, .250"-28 and .313"-18 thread x 1.300"	4	–	4	4	4	–	4	–	–	4
¢ 2145D95	STUD—Stepped, plain, .313"-24 and .375"-16 thread x 1.500"	36	36	36	36	36	36	36	36	36	36
¢ 2146D5	STUD—Stepped, drilled, .313"-24 and .375"-16 thread x 1.500"	1	1	1	1	1	1	1	1	1	1

 # Quantity varies. Part No. 2142D1—See note on pages 7 and 26.

Part Number	Nomenclature	Model R1820 -40	-40B	-54	-60	-65	-71	-73	-87	-95	-97
¢ 2146D55	STUD—Stepped, drilled, .313″-24 and .375″-16 thread x 1.100″	9	9	9	9	9	9	9	9	9	9
2163D15	CLAMP—Hose, 1.160″ ID	90	90	90	90	–	–	–	90	–	–
2174D1	CLAMP—.500″ OD tube	–	–	–	–	–	–	–	–	–	1
2174D2	CLAMP—1.000″ OD tube	–	–	–	–	–	–	–	–	–	1
2178D10	SCREW—Oil metering No. 37	1	1	1	1	1	1	1	1	1	1
2178D11	SCREW—Oil metering No. 50	1	1	1	1	1	1	1	1	1	1
2178D4	SCREW—Oil metering No. 51	1	–	–	–	1	–	–	–	1	–
22D1	SCREW—Hex head, lockwire, .250″-20 thread x 1.000″	8	–	–	8	8	–	8	–	–	4
22D3	SCREW—Hex head, lockwire, .250″-20 thread x .750″	#	#	#	–	–	#	–	#	#	#
22D30	SCREW—Hex head, lockwire, .250″-20 thread x 2.750″	–	–	–	8	–	–	–	–	–	–
22D34	SCREW—Hex head, lockwire, .250″-20 thread x 2.600″	8	–	–	–	–	–	–	–	–	–
22D6	SCREW—Hex head, lockwire, .250″-20 thread x 1.750″	6	–	–	–	–	–	–	–	6	–
23D30	GASKET—Copper asbestos, .414″ x .563″ x .063″	2	2	2	2	2	2	2	2	2	2
23D43	GASKET—Copper asbestos, .726″ x .938″ x .094″	–	–	–	–	–	–	–	2	–	2
27D1	WASHER—.266″ x .500″ x .033″	#	#	#	89	89	#	89	#	#	#
27D107	WASHER—Plain, .328″ x .563″ x .035″	@	@	@	@	@	@	@	@	@	@
27D111	WASHER—.328″ x .750″ x .063″	2	2	2	2	2	2	2	2	2	2
27D118	WASHER—.329″ x .594″ x .078″	4	4	4	4	3	3	3	4	3	3
27D125	WASHER—.391″ x .750″ x .047″	2	–	–	2	2	–	2	–	–	1
27D130	WASHER—.140″ x .375″ x .031″	#	#	#	#	#	#	#	#	#	#
27D131	WASHER—.219″ x .438″ x .031″	–	–	–	6	–	–	–	–	–	–
27D156	WASHER—Plain, 2.563″ x 2.781″ x .032″	1	1	1	1	1	1	1	1	1	1
27D159	WASHER—Plain, .453″ x .750″ x .063″	6	6	6	6	6	6	6	6	6	6
27D168	WASHER—.406″ x .594″ x .032″	1	1	1	1	–	–	–	1	–	–
27D183	WASHER—.138″ x .620″ x .031″	34	4	4	4	34	34	34	34	32	34
27D202	WASHER—.343″ x .547″ x .031″	1	1	1	1	–	–	–	1	1	–
27D220	WASHER—Plain, .341″ x .563″ x .032″	5	5	2	5	5	5	5	5	5	5
27D231	WASHER—Plain, .394″ x .625″ x .031″	3	3	3	3	–	–	–	3	–	–
27D24	WASHER—.219″ x .375″ x .063″	14	–	–	–	14	–	14	14	–	14
27D247	WASHER—.328″ x .594″ x .141″	–	–	1	–	–	–	–	–	–	–
27D3	WASHER—.266″ x .500″ x .063″	6	–	–	–	–	–	–	–	6	–
27D30	WASHER—.203″ x .313″ x .031″	5	5	5	5	5	5	5	5	5	5
27D5	WASHER—.328″ x .562″ x .033″	1	1	1	1	1	1	1	1	1	1
27D67	WASHER—.391″ x .688″ x .016″	2	2	–	2	–	2	2	2	2	–
27D76	WASHER—.328″ x .625″ x .031″	–	–	–	–	2	–	–	–	–	2
27D98	WASHER—.266″ x .781″ x .062″	18	18	18	22	18	18	18	18	18	18
28D12	LOCKWASHER—.344″ x .594″ x .094″	3	3	3	3	3	3	3	3	3	3
28D14	LOCKWASHER—.266″ x .454″ x .049″	72	72	72	72	72	72	72	72	72	72
28D5	LOCKWASHER—No. 10	–	–	–	18	1	–	1	–	–	1
29D10	PIN—Straight, special, .250″ x .500″	2	2	2	2	2	2	2	2	2	2
29D11	PIN—Straight, special, .250″ x .725″	18	18	18	18	18	18	18	18	18	18
29D20	PIN—Straight, .250″ x .344″	1	1	1	1	1	1	1	1	1	1
3D10	BOLT—Hex head, .250″-28 thread x 1.563″	2	2	2	2	2	2	2	2	1	2
3D12	BOLT—Hex head, .250″-28 thread x 1.625″	–	–	–	1	–	–	–	–	–	–
3D23	BOLT—Hex head, plain .250″-28 thread x .680″	#	#	#	#	#	#	–	#	–	#
3D6	BOLT—Hex head, .250″-28 thread x .781″	2	2	2	2	2	2	–	2	–	2
3D9	BOLT—Hex head, .250″-28 thread x .625″	6	2	–	–	–	–	–	–	–	–
34D110	WASHER—Plain, .203″ x .500″ x .044″	18	18	18	18	18	18	18	18	16	18
34D114	WASHER—Plain, special, .220″ x .560″ x .150″	18	18	18	18	18	18	18	18	16	18
34D123	WASHER—Plain, .344″ x .490″ x .060″	1	–	–	–	–	–	–	–	1	–
34D131	WASHER—Plain, .456″ x .750″ x .094″	9	9	9	9	9	9	9	9	9	9
34D14	WASHER—.394″ x .750″ x .078″	53	53	53	53	53	53	53	53	53	53
34D16	WASHER—.456″ x .875″ x .094″	#	#	#	#	#	#	#	#	#	#
34D162	WASHER—Plain, special, .281″ x .640″ x .050″	4	4	4	4	4	4	–	4	–	4
34D33	WASHER—.331″ x .625″ x .063″	42	42	44	42	44	42	42	42	42	44
± 34D39	WASHER—Plain, special, 1.141″ x 1.560″ x .160″	1	1	1	1	1	1	1	1	1	1
34D4	WASHER—Plain, .328″ x .750″ x .094″	6	6	6	6	6	6	6	6	6	6
34D51	WASHER—.266″ x .500″ x .047″	44	37	34	41	32	28	30	34	34	32
34D88	WASHER—Plain, .328″ x .500″ x .062″	10	10	10	10	10	10	10	10	10	10
35D32	SCREW—Hex head, lockwire, .375″-24 thread x .820″	8	8	8	8	8	8	8	8	8	8
35D9	SCREW—Hex head, lockwire, .375″-24 thread x .875″	@	@	@	@	–	–	–	@	–	–
36D7	PLUG—Pipe, hex, head, drilled, .250″-18 N.P.T.	23	23	23	23	23	23	23	23	23	23
37D100	WASHER—.420″ x .615″ x .031″	1	–	–	–	1	1	–	–	–	1
37D12	WASHER—.750″ x .484″ x .031″	1	1	1	1	–	1	–	1	1	–

 # Quantity varies. *Part No. 22D3—See note on pages 18 and 30.*
Part No. 27D1—See note on pages 18, 31, 118, 167, 192, 195 and 198.
Part No. 27D130—See note on pages 127, 128, 134, 135, 139, 140, 142, 143, 144, 147, 148, 149, 150, 153, 154, 157, 158, 160, 161, 162, 163, 164, 165 and 167.
Part No. 3D23—See note on pages 48 and 50.
Part No. 34D16—See note on page 8.

Part Number	Nomenclature	Model R1820 -40	-40B	-54	-60	-65	-71	-73	-87	-95	-97
37D26	WASHER—Special, .766" x 1.000" x .031"	1	1	1	1	–	1	–	1	1	–
37D28	WASHER—.625" x .813" x .031"	1	–	–	–	1	1	1	1	1	1
37D76	GASKET—.984" x 1.219" x .018"	1	1	1	1	–	1	–	1	1	–
37D99	PACKING—.313" x .563" x .219"	–	–	–	–	–	–	–	18	–	–
¢ 4015D102	BUSHING—Open screw, .313"-24 and .563"-18 x .750"	2	2	2	2	2	2	2	2	2	2
¢ 4015D2	BUSHING—Open screw, .250"-28 and .438"-20 thread x .650"	9	9	9	9	9	9	9	9	9	9
¢ 4015D3	BUSHING—Open screw, .313"-24 and .500"-20 thread x .710"	28	28	30	28	30	28	28	28	28	30
¢ 4015D6	BUSHING—Open screw, .500"-20 and .688"-16 thread x .900"	2	2	2	2	2	2	2	2	2	2
¢ 4016D3	BUSHING—Blind screw, .313"-24 and .500"-20 thread x 1.020"	9	9	9	9	9	9	9	9	9	9
4019D2	CLAMP—Modified Noc-Out hose, 1.360" ID	6	–	–	–	–	–	–	–	–	–
4019D8	CLAMP—Modified Noc-Out hose, 1.250"	4	4	4	4	4	4	4	4	4	4
¢ 4028D2	BUSHING—Blind screw, .250"-28 and .438"-20 thread x .810"	18	18	18	18	18	18	18	18	18	18
4037D2	FLANGE—Oil pump connection	–	–	–	–	–	–	–	–	1	–
4037D3	FLANGE—Oil pump connection	–	–	–	–	–	–	–	–	1	–
4037D4	FLANGE—Oil pump connection	2	2	2	2	2	2	2	2	–	2
4040D4	NUT—Elastic stop, hex, .250"-28 thread	16	8	12	13	14	10	10	10	6	14
4040D5	NUT—Elastic stop, hex, .313"-24 thread	53	53	59	55	53	55	53	55	53	55
4040D6	NUT—Elastic stop, hex, .375"-24 thread	38	38	38	38	38	38	38	38	38	38
4042D1	PLUG—Pipe, hex head, drilled, .125"-27 N.P.T.	#	#	#	#	#	#	#	#	#	#
45D1	BOLT—Hex head, .313"-24 thread x 1.031"	27	27	27	27	27	27	27	27	27	27
45D21	BOLT—Hex head, .313"-24 thread x 2.563"	–	–	2	–	–	–	–	–	–	2
45D29	BOLT—Hex head, .313"-24 thread x 2.220"	8	8	#	6	8	8	8	8	8	8
45D3	BOLT—Hex head, .313"-24 thread x 1.720"	–	–	2	–	2	–	–	–	–	2
45D33	BOLT—Hex head, .313"-24 thread x 3.500"	–	2	2	2	–	–	–	–	–	–
46D13	BOLT—Hex head, .250"-28 thread x .844"	18	–	–	–	18	18	18	18	18	–
47D19	BOLT—Hex head, .375"-24 thread x .840"	4	4	4	4	–	–	–	4	–	–
5D39	BALL—.563" diameter	1	1	1	1	–	–	–	2	–	1
5D9	BALL—.125" diameter	–	–	–	–	2	–	2	–	–	2
± 5015D3	RING—Oil seal, drilled, standard size	6	6	6	6	6	6	6	6	6	6
5037D6	PLUG—Hex head, lockwire, 1.250"-12 thread	1	1	1	1	1	1	1	1	1	1
55D19	SCREW—Flat countersunk head, No. 10—32 thread x .500"	12	–	–	–	12	12	12	12	12	12
55D8	SCREW—Flat countersunk head, No. 10—32 thread x .560"	18	18	18	18	18	18	18	18	16	18
56D10	SCREW—Flat countersunk head, .250"-28 thread x .484"	8	8	8	8	8	8	8	8	8	3
56D3	SCREW—Flat countersunk head, .250"-20 thread x .688"	5	5	5	5	5	5	5	5	5	5
56D6	SCREW—Flat countersunk head, .250"-20 thread x .563"	3	3	3	3	3	3	3	3	3	3
57D1	COTTER PIN—.063" x .500"	12	12	14	18	32	14	12	14	12	34
57D11	COTTER PIN—.063" x .438"	6	–	–	–	–	–	–	–	6	–
57D3	COTTER PIN—.063" x .375"	6	6	6	6	–	–	–	6	6	–
58D1	COTTER PIN—.094" x .875"	1	1	1	1	1	1	1	1	1	1
58D2	COTTER PIN—.094" x .438"	–	–	–	–	20	–	–	–	–	20
58D3	COTTER PIN—.094" x .625"	14	14	14	14	14	14	14	14	14	14
58D8	COTTER PIN—.094" x .750"	–	–	–	–	24	–	–	–	–	24
59D3	COTTER PIN—.125" x .750"	3	1	1	1	1	1	1	1	3	1
59D5	COTTER PIN—.125" x .875"	24	24	18	24	18	24	24	24	24	18
59D9	COTTER PIN—.125" x .563"	2	–	–	–	2	2	2	–	2	2
6D44	BOLT—Hex head, for slotted nut, .250"-28 thread x 2.120"	–	4	–	–	–	–	–	–	–	–
6D9	BOLT—Hex head, for slotted nut, .250"-28 thread x .750"	–	–	–	4	–	–	–	–	–	–
63D36	BOLT—Hex head, for slotted nut, .313"-24 thread x .500"	4	4	–	4	4	–	–	4	–	–
65D15	SCREW—Hex head, lockwire, .250"-28 thread x .375"	24	24	24	24	24	24	24	24	24	24
65D18	SCREW—Hex head, lockwire, .250"-28 thread x .320"	6	6	6	6	6	6	6	6	6	6
66D19	RIVET—Round head, .125" x .250"	#	#	#	#	#	#	#	#	#	#
66D25	RIVET—Round head, .125" x .313"	20	–	28	24	–	24	–	24	–	–
66D36	RIVET—Round head, .125" x .313"	–	18	18	18	–	–	–	–	–	–
66D39	RIVET—Button head, .125" x .156"	–	106	112	112	–	–	–	–	–	–
66D41	RIVET—Button head, .125" x .344"	–	2	–	–	–	–	–	–	–	–
66D45	RIVET—Round head, .125" x .188"	4	54	–	–	–	–	–	–	4	–
66D47	RIVET—Round head, .125" x .250"	–	4	4	4	–	–	–	–	–	–
66D52	RIVET—Button head, .125" x .188"	–	6	6	6	–	–	–	–	–	–
66D53	RIVET—Round head, .125" x .188"	–	16	12	12	–	–	–	–	–	–
66D56	RIVET—Button head, .125" x .280"	16	22	24	22	16	16	16	16	16	16
66D60	RIVET—Large round head, .125" x .218"	32	–	32	24	–	32	–	32	–	–
66D61	RIVET—Large round head, .125" x .281"	63	–	42	43	–	56	–	63	–	–
70D3	PIN—Straight, .375" x .750"	1	1	1	1	1	1	1	1	1	1
70D6	PIN—Straight, .375" x .875"	2	2	2	2	2	2	2	2	2	2
82D15	BOLT—Hex head, for slotted nut, .375"-24 thread x 2.020"	2	–	–	–	2	2	2	–	2	2

 # Quantity varies. *Part No. 4042D1—See note on pages 7, 11, 15, 17, 27, 85, 116 and 186.*
Part No. 45D29—See note on page 140.
Part No. 66D19—See note on pages 127, 128, 134, 135, 139, 140, 142, 143, 144, 147, 148, 149, 153, 154, 157, 158, 160, 161, 163, 164 and 167.

Part Number	Nomenclature	Model R1820									
		-40	-40B	-54	-60	-65	-71	-73	-87	-95	-97
82D16	BOLT—Hex head, for slotted nut, .375″-24 thread x 1.510″	2	2	2	2	2	2	2	2	2	2
82D30	BOLT—Hex head, for slotted nut, special, .375″-24 thread x 2.030″	2	2	2	2	2	2	2	2	2	2
85D21	LOCKWIRE—.091″ x 16.250″	1	–	–	–	–	–	–	–	1	–
86D11	SCREW—Oval fillister head, lockwire, No. 10-32 thread x .313″	3	3	3	3	3	3	3	3	3	3
86D2	SCREW—Oval fillister head, lockwire, No. 10-32 thread x .500″	–	–	2	2	–	2	–	2	–	2
86D5	SCREW—Flat fillister head, lockwire, No. 10-32 thread x .266″	9	5	5	5	5	5	5	5	9	5
87D9	PIN—Straight, .079″ x .455″	3	2	2	2	3	3	3	3	3	3
90D13	SCREW—Hex head, lockwire, .313″-24 thread x .625″	2	2	2	2	2	2	2	2	2	2
90D31	SCREW—Hex head, lockwire, .313″-24 thread x .260″	6	6	6	6	6	6	6	6	6	6
93D16	PLUG—Hex head, 1.125″-18 thread	1	1	1	1	1	1	1	1	1	1
93D18	PLUG—Hex head, .625″-18 thread	3	3	4	4	4	4	4	3	3	4
93D20	PLUG—Hex head, 1.125″-12 thread	2	–	–	–	–	–	–	–	2	–
99D12	PLUG—Square head, drilled, standard form tapered, .250″-28 N.P.T.	2	2	2	2	2	2	2	2	2	2

AVIALOGS
WWW.AVIALOGS.COM